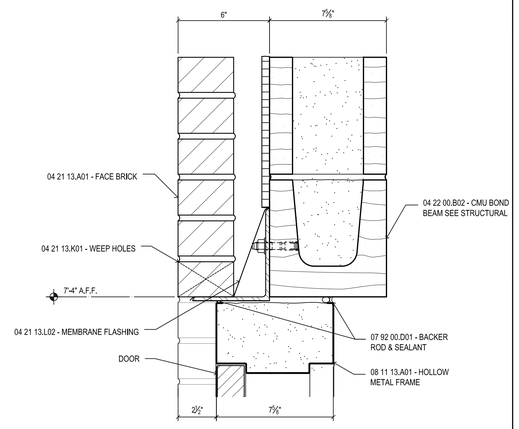

1 HEAD DETAIL
3"=1'-0" A101CP

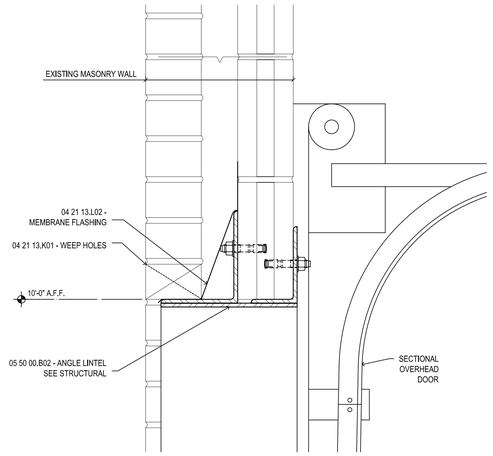

4 HEAD DETAIL
3"=1'-0" A101CP

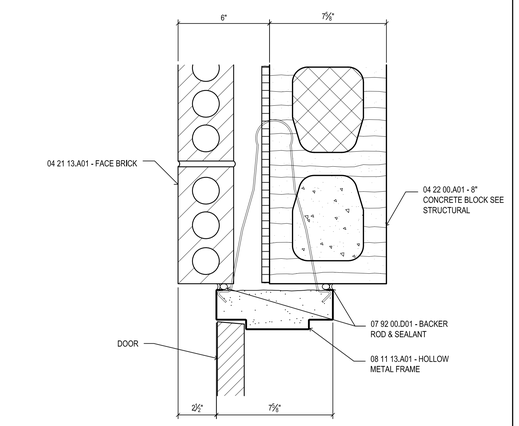

2 JAMB DETAIL
3"=1'-0" A101CP

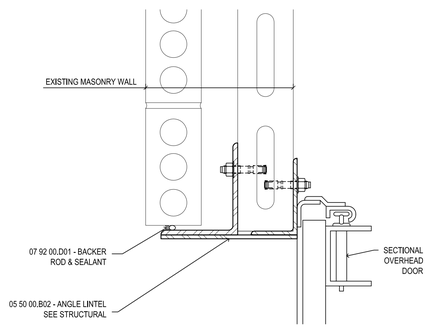

5 JAMB DETAIL
3"=1'-0" A101CP

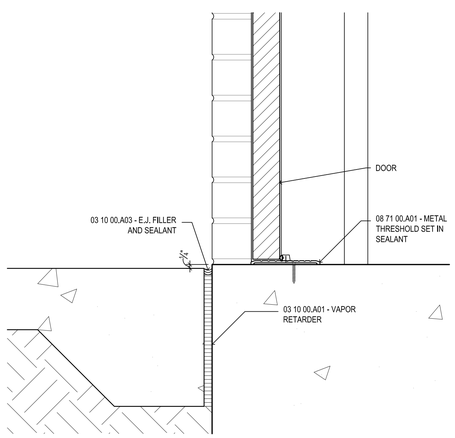

3 SILL DETAIL
3"=1'-0" A101CP

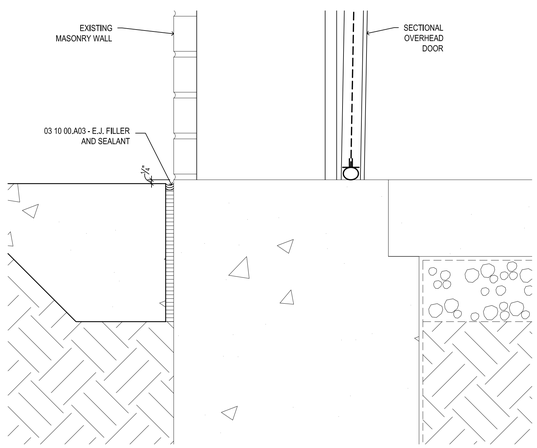

6 SILL DETAIL
3"=1'-0" A101CP

DOOR SCHEDULE

MARK	DOOR / CASED OPENING							FRAME						REMARKS
	SIZE			TYPE	MAT'L	CLOSER	LABEL	TYPE	MAT'L	HEAD DETAIL	JAMB(R) DETAIL	JAMB(L) DETAIL	SILL DETAIL	
	WIDTH	HGT	THK											
CP001	10'-0"	10'-0"	1 3/4"	D	-	-	-	-	HM	4/A001CP	5/A001CP	5/A001CP	-	SECTIONAL OVERHEAD DOOR
CP002	6'-0"	7'-0"	1 3/4"	B	HM	-	-	1	HM	9/A001CP	2/A001CP	2/A001CP	10/A001CP	-
CP003	3'-0"	7'-0"	1 3/4"	A	HM	-	-	1	HM	7/A001CP	8/A001CP	8/A001CP	-	-
CP004a	8'-0"	8'-0"	1 3/4"	B	HM	-	-	1	HM	9/A001CP	2/A001CP	2/A001CP	10/A001CP	-
CP004b	8'-0"	8'-0"	1 3/4"	B	HM	-	-	1	HM	9/A001CP	2/A001CP	2/A001CP	10/A001CP	-
CP005	6'-0"	7'-0"	1 3/4"	B	HM	-	90 MIN.	1	HM	7/A001CP	8/A001CP	8/A001CP	-	-
CP006	6'-0"	7'-0"	1 3/4"	B	HM	-	-	1	HM	1/A001CP	2/A001CP	2/A001CP	3/A001CP	-
CP007	6'-0"	7'-0"	1 3/4"	B	HM	-	-	1	HM	1/A001CP	2/A001CP	2/A001CP	3/A001CP	-
CP008a	6'-0"	7'-0"	1 3/4"	B	HM	-	-	1	HM	1/A001CP	2/A001CP	2/A001CP	3/A001CP	-
CP008b	3'-0"	7'-0"	1 3/4"	A	HM	-	-	1	HM	1/A001CP	2/A001CP	2/A001CP	3/A001CP	-
CP009	3'-0"	7'-0"	1 3/4"	C	SCWD	Y	-	1	HM	7/A001CP	8/A001CP	8/A001CP	-	-
CP011	3'-0"	7'-0"	1 3/4"	A	SCWD	Y	-	1	HM	7/A001CP	8/A001CP	8/A001CP	-	-

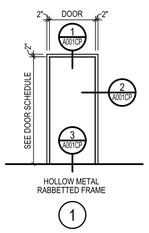

10 FRAME TYPES
1/4"=1'-0" CENTRAL PLANT

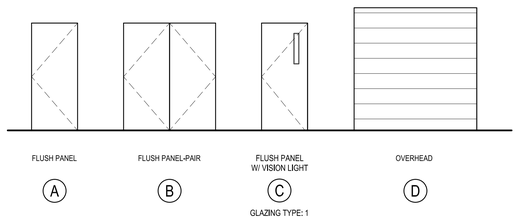

11 DOOR TYPES
1/4"=1'-0" CENTRAL PLANT

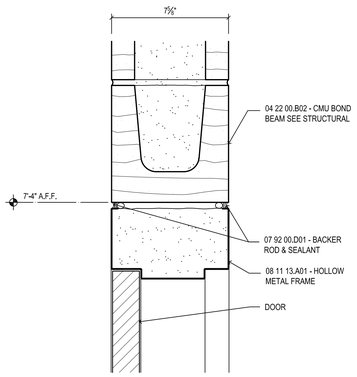

7 HEAD DETAIL
3"=1'-0" A101CP

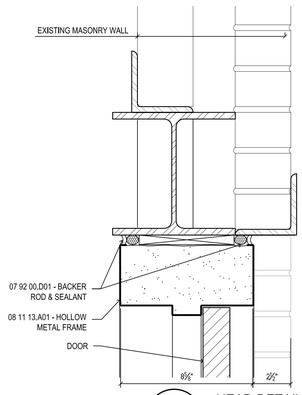

9 HEAD DETAIL
3"=1'-0" A101CP

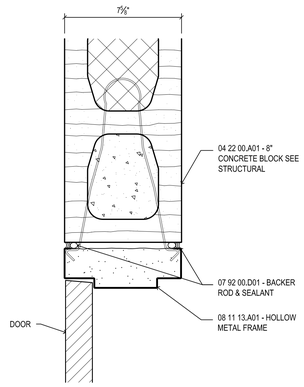

8 JAMB DETAIL
3"=1'-0" A101CP

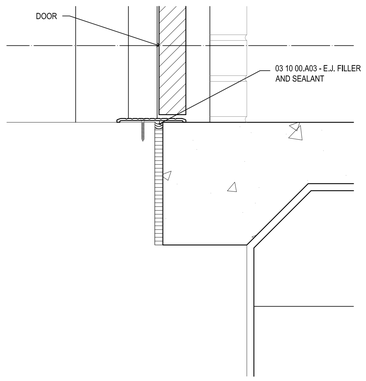

10 SILL DETAIL
3"=1'-0" A101CP

MATERIAL KEYING

DIVISION 03 - CONCRETE

03 10 00 - CONCRETE FORMING AND ACCESSORIES
03 10 00.A01 - VAPOR RETARDER
03 10 00.A03 - E.J. FILLER AND SEALANT

DIVISION 04 - MASONRY

04 21 13 - UNIT MASONRY
04 21 13.A01 - FACE BRICK
04 21 13.K01 - WEEP HOLES
04 21 13.L02 - MEMBRANE FLASHING

04 22 00 - CONCRETE UNIT MASONRY
04 22 00.A01 - 8" CONCRETE BLOCK SEE STRUCTURAL

DIVISION 05 - METALS

05 50 00 - METAL FABRICATIONS
05 50 00.B02 - ANGLE LINTEL SEE STRUCTURAL

DIVISION 07 - THERMAL AND MOISTURE PROTECTION

07 92 00 - JOINT SEALANTS
07 92 00.D01 - BACKER ROD & SEALANT

DIVISION 08 - OPENINGS

08 11 00 - METAL DOORS AND FRAMES
08 11 13.A01 - HOLLOW METAL FRAME

08 71 00 - DOOR HARDWARE
08 71 00.A01 - METAL THRESHOLD SET IN SEALANT

GENERAL NOTES

A. INTERIOR DOOR FRAMES SHALL BE STANDARD WELDED HOLLOW METAL FRAMES UNLESS OTHERWISE NOTED.

B. ALL HOLLOW METAL DOOR FRAMES SHALL BE PAINTED.

C. PROVIDE SEALANT AT PERIMETER OF BOTH SIDES OF DOOR FRAMES.

D. ALL WOOD BLOCKING SHALL BE FIRE RETARDANT TREATED, TYPICAL.

E. SEE DOOR SPECIFICATIONS FOR UNDERCUT CLEARANCE REQUIREMENTS.

F. SEE ELECTRICAL DRAWINGS AND HARDWARE SCHEDULE FOR DOOR ACCESS CONTROL AND OPERATOR REQUIREMENTS.

G. CONTRACTOR TO CONFIRM EXACT EXTERIOR WINDOW AND DOOR OPENING SIZE. AS FRAME SIZES SHOWN ON WINDOW AND DOOR TYPE ELEVATIONS ARE NOMINAL AND DO NOT ACCOUNT FOR BLOCKING AND SHIMMING.

REGISTERED ARCHITECT
Jerry Phillip Saunders
3487
Tupelo, MS
STATE OF MISSISSIPPI
04 MARCH 2013

THE McCARTY COMPANY
DESIGN GROUP, P.A.
TELEPHONE: (662) 844-4403
FAX: (662) 844-0530
OFFICE ADDRESS: 533 WEST MAIN STREET TUPELO, MS 38804
MAILING ADDRESS: P.O. BOX 440 TUPELO, MS 38802

PROJECT TITLE
USM - CENTURY PARK SOUTH
IHL# 208-297
HATTIESBURG, MISSISSIPPI

THE UNIVERSITY OF SOUTHERN MISSISSIPPI

PROJECT NO:
- 2012020

DRAWN BY:
- JCF

CHECKED BY:
- JPH

DATE ISSUED:
- 04 MAR 2013

REVISIONS & ADDENDUMS

SHEET TITLE
CENTRAL PLANT - DOOR SCHEDULE, TYPES & DETAILS

SHEET NUMBER
A001CP

Plot Date: BID DOCUMENTS - 04 MAR 2013

CENTRAL PLANT INTERIOR FINISH SCHEDULE

FINISH TYPE KEY	ROOM NAME	NUMBER	FLOOR FINISH	BASE FINISH	WALL FINISH	CEILING FINISH	COMMENTS
F180	CHILLER	CP001	CONCRETE	NO BASE	PAINT - MASONRY	NO CEILING	
F181	TRANSFORMER VAULT	CP002	CONCRETE	EXISTING	EXISTING	EXISTING	
F182	ELEC.	CP003	CONCRETE	NO BASE	PAINT - MASONRY	NO CEILING	
F183	CHILLER	CP004	CONCRETE	NO BASE	PAINT - MASONRY	NO CEILING	
F184	MECH.	CP005	CONCRETE	NO BASE	PAINT - MASONRY	NO CEILING	
F185	BOILER	CP006	CONCRETE	NO BASE	PAINT - MASONRY	PAINT - GWB	
F186	FIRE PUMP	CP007	CONCRETE	NO BASE	PAINT - MASONRY	NO CEILING	
F187	ELEC.	CP008	CONCRETE	NO BASE	PAINT - MASONRY	NO CEILING	
F188	DATA	CP009	CONCRETE	4" RUBBER BASE	PAINT - GWB / MASONRY	LAY-IN ACT	
F189	OFFICE	CP010	CONCRETE	4" RUBBER BASE	PAINT - GWB / MASONRY	LAY-IN ACT	
F190	TLT	CP011	CERAMIC TILE	CERAMIC TILE	PAINT - GWB	PAINT - GWB	

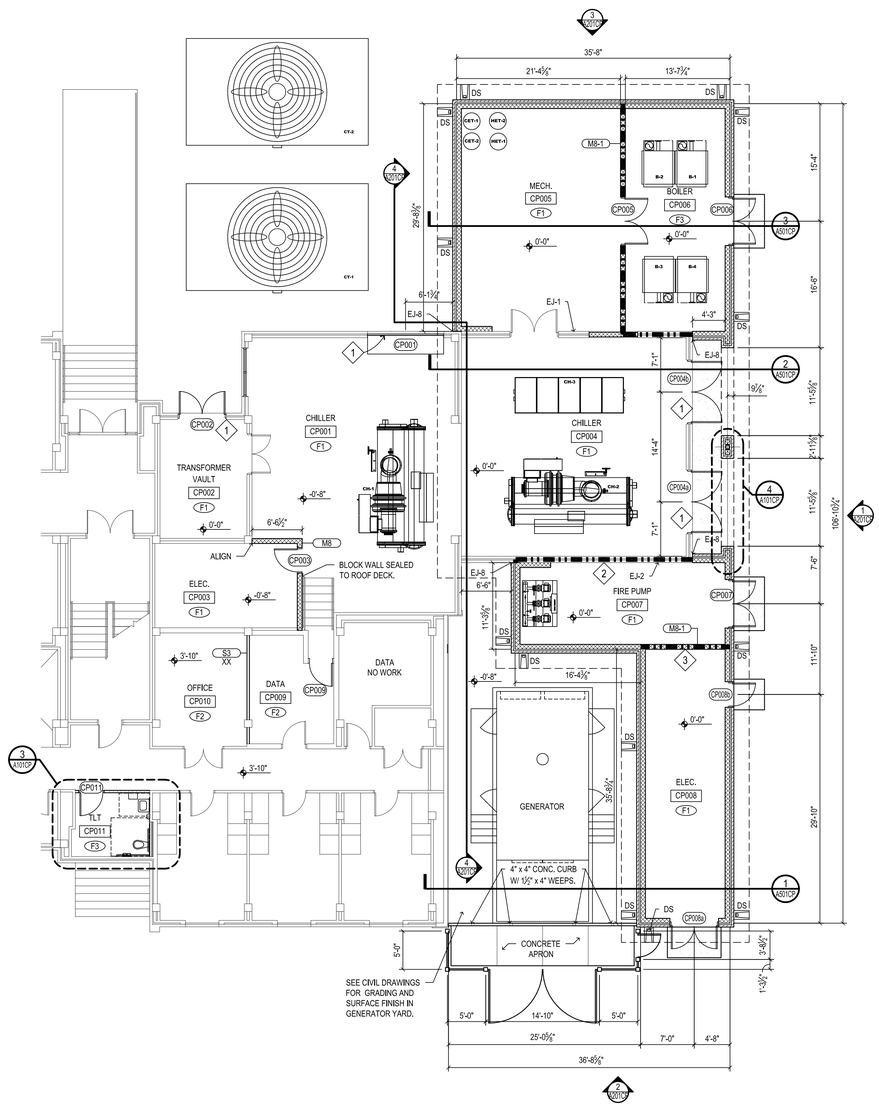

1 1/8"=1'-0" NEW FLOOR PLAN

CENTRAL PLANT - NEW SQUARE FOOTAGE = 1,819

NORTH

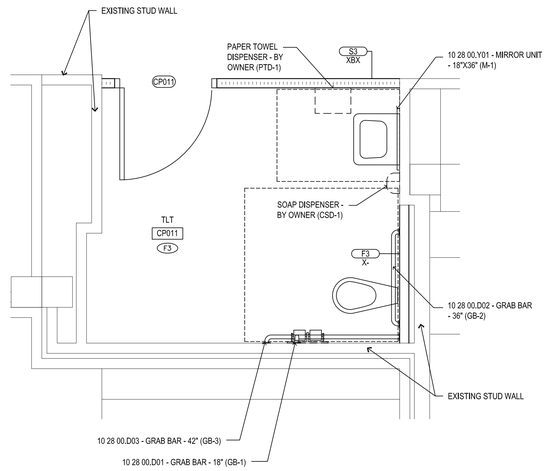

3 1/2"=1'-0" TOILET ENLARGED PLAN

CENTRAL PLANT

NORTH

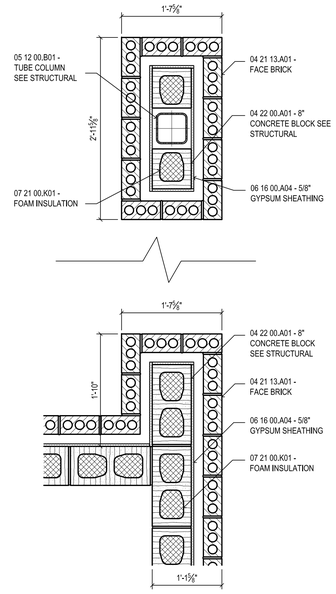

4 1"=1'-0" PLAN DETAIL

A101CP

NORTH

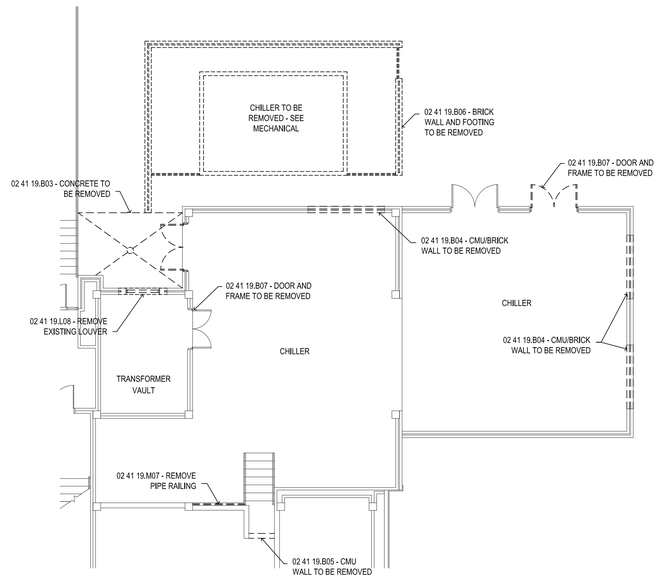

2 1/8"=1'-0" DEMO FLOOR PLAN

CENTRAL PLANT

NORTH

MATERIAL KEYING

DIVISION 02 - EXISTING CONDITIONS

02 41 19 - SELECTIVE DEMOLITION
02 41 19.B03 - CONCRETE TO BE REMOVED
02 41 19.B04 - CMU/BRICK WALL TO BE REMOVED
02 41 19.B05 - CMU WALL TO BE REMOVED
02 41 19.B06 - BRICK WALL AND FOOTING TO BE REMOVED
02 41 19.B07 - DOOR AND FRAME TO BE REMOVED
02 41 19.L08 - REMOVE EXISTING LOUVER
02 41 19.M07 - REMOVE PIPE RAILING

DIVISION 04 - MASONRY

04 21 13 - UNIT MASONRY
04 21 13.A01 - FACE BRICK

04 22 00 - CONCRETE UNIT MASONRY
04 22 00.A01 - 8" CONCRETE BLOCK SEE STRUCTURAL

DIVISION 05 - METALS

05 12 00 - STRUCTURAL STEEL FRAMING
05 12 00.B01 - TUBE COLUMN SEE STRUCTURAL

DIVISION 06 - WOOD, PLASTICS AND COMPOSITES

06 16 00 - SHEATHING
06 16 00.A04 - 5/8" GYPSUM SHEATHING

DIVISION 07 - THERMAL AND MOISTURE PROTECTION

07 21 00 - THERMAL INSULATION
07 21 00.K01 - FOAM INSULATION

07 62 00 - SHEET METAL FLASHING AND TRIM
07 62 00.B01 - DOWNSPOUT
07 62 00.F01 - CONCRETE SPLASH BLOCK

DIVISION 10 - SPECIALTIES

10 28 00 - TOILET, BATH AND LAUNDRY ACCESSORIES
10 28 00.D01 - GRAB BAR - 18" (GB-1)
10 28 00.D02 - GRAB BAR - 36" (GB-2)
10 28 00.D03 - GRAB BAR - 42" (GB-3)
10 28 00.Y01 - MIRROR UNIT - 18"X36" (M-1)

KEYNOTES

1. REMOVE MASONRY WALL AS REQUIRED FOR NEW DOOR. SEE STRUCTURAL FOR LINTEL / BOND BEAM AND JAMB REINFORCING. USE ONLY EXISTING MASONRY ADJACENT TO NEW DOOR JAMBS.
2. TAKE FIRE WALL (3⅝" METAL STUD WITH ⅝" GYPSUM BOARD BOTH SIDES) FROM EXISTING ROOF TO NEW ROOF DECK.
3. TAKE CMU FIRE WALL TO ROOF DECK.

LEGEND

DS — 07 62 00.B01 - DOWNSPOUT

07 62 00.F01 - CONCRETE SPLASH BLOCK

KEY PLAN

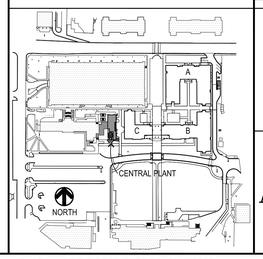

REGISTERED ARCHITECT — Jeffrey Paul Hamilton — 3420 — Tupelo, MS — STATE OF MISSISSIPPI — 04 MARCH 2013

THE McCARTY COMPANY DESIGN GROUP, P.A.

OFFICE ADDRESS: 533 WEST MAIN STREET TUPELO, MS 38804

TELEPHONE: (662) 844-4400 FAX: (662) 844-0530

MAILING ADDRESS: P.O. BOX 440 TUPELO, MS 38802

07 62 00.B01 - DOWNSPOUT

07 62 00.F01 - CONCRETE SPLASH BLOCK

PROJECT TITLE

USM - CENTURY PARK SOUTH
IHL# 208-297

HATTIESBURG, MISSISSIPPI

THE UNIVERSITY OF SOUTHERN MISSISSIPPI

PROJECT NO: 2012020

DRAWN BY: BKS, JCF

CHECKED BY: JPH

DATE ISSUED: 04 MAR 2013

REVISIONS & ADDENDUMS

SHEET TITLE

CENTRAL PLANT - NEW & DEMO FLOOR PLANS

SHEET NUMBER

A101CP

Plot Date: BID DOCUMENTS - 04 MAR 2013

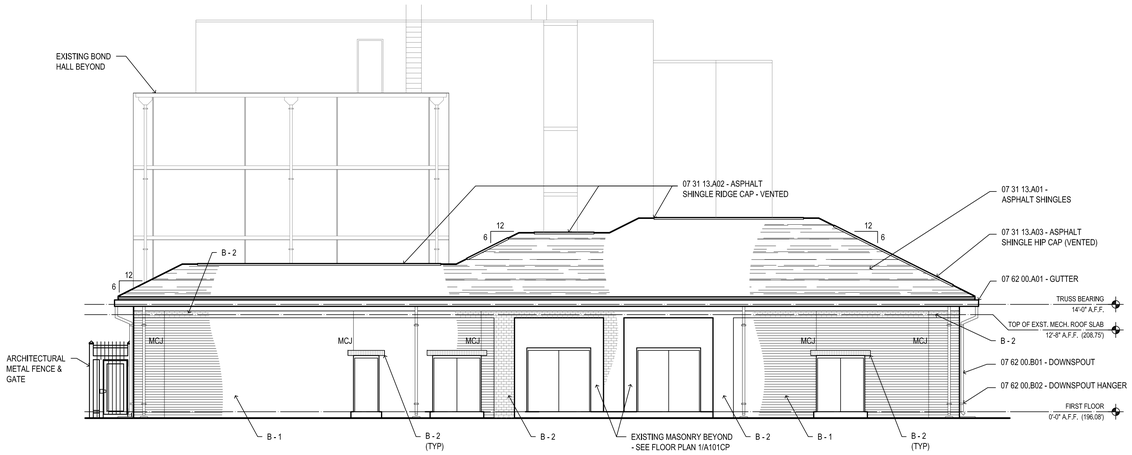

1 EAST ELEVATION
1/8"=1'-0"
CENTRAL PLANT

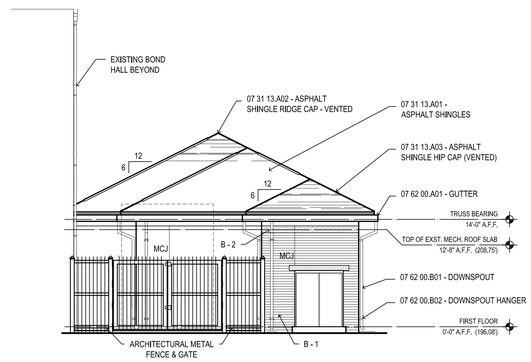

2 SOUTH ELEVATION
1/8"=1'-0"
CENTRAL PLANT

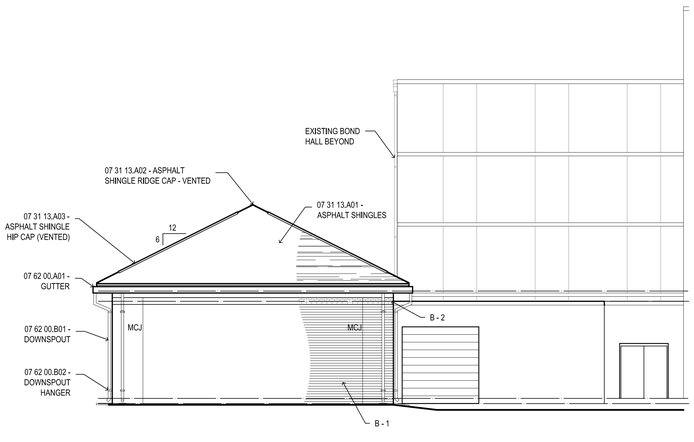

3 NORTH ELEVATION
1/8"=1'-0"
CENTRAL PLANT

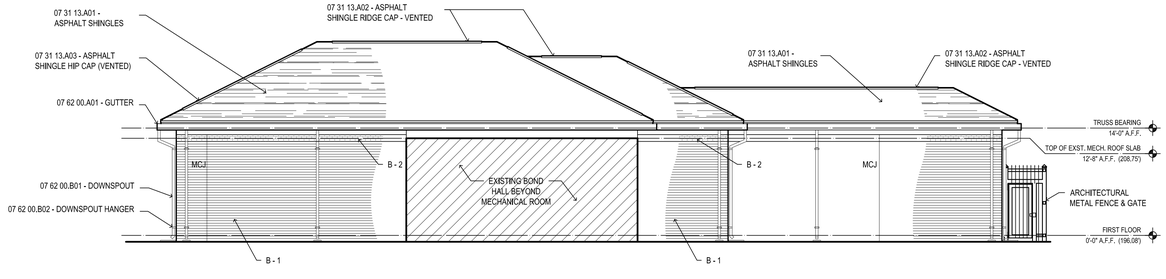

4 WEST ELEVATION
1/8"=1'-0"
CENTRAL PLANT

MATERIALS KEYING

DIVISION 4 - MASONRY

04 21 13 - UNIT MASONRY
- 04 21 13.A06 - FACE BRICK (COLOR #1)
- 04 21 13.A07 - FACE BRICK (COLOR #2)
- 04 21 13.N01 - CONTROL JOINT

DIVISION 7 - THERMAL AND MOISTURE PROTECTION

07 31 13 - ASPHALT SHINGLES
- 07 31 13.A01 - ASPHALT SHINGLES
- 07 31 13.A02 - ASPHALT SHINGLE RIDGE CAP - VENTED
- 07 31 13.A03 - ASPHALT SHINGLE HIP CAP (VENTED)

07 62 00 - PRE-MANUFACTURED METAL
- 07 62 00.A01 - GUTTER
- 07 62 00.B01 - DOWNSPOUT
- 07 62 00.B02 - DOWNSPOUT HANGER

LEGEND

- B - 1 — 04 21 13.A06 - FACE BRICK (COLOR #1)
- B - 2 — 04 21 13.A07 - FACE BRICK (COLOR #2)
- MCJ — 04 21 13.N01 - CONTROL JOINT

GENERAL NOTES

A. "MCJ" INDICATED MASONRY CONTROL JOINT IN FACE BRICK, TYPICAL. MCJ'S ARE TO BE CONTINUOUS AROUND ENDS OF CAST STONE LINTELS, SILLS, BANDS, ETC. WHERE MCJ'S DO NOT ALIGN WITH BRICK SOLDIER COURSING, SHIFT JOINT - DO NOT CUT BRICK AT SOLDIER COURSE.

B. "DS" INDICATED DOWNSPOUT PER SPECIFICATIONS. HOLD 1" OFF FACE OF BUILDING UNLESS OTHERWISE NOTED. SEE CIVIL STORM DRAINAGE PLANS FOR DOWNSPOUT STORM DRAINAGE TIE-INS BELOW GRADE. PROVIDE CAST IRON DOWNSPOUT BOOTS AT BASE OF BUILDING PER SPECIFICATIONS.

C. SOLDIER COURSE LINTELS TO BE FACE BRICK (COLOR #2) - 04 21 13.A07

KEY PLAN

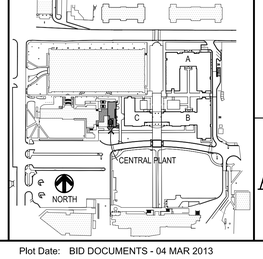

REGISTERED ARCHITECT
Thomas Alexander McCarty Jr.
3487
Tupelo, MS
STATE OF MISSISSIPPI
04 MARCH 2013

THE McCARTY COMPANY DESIGN GROUP, P.A.
MAILING ADDRESS: P.O. BOX 440 TUPELO, MS 38802
OFFICE ADDRESS: 533 WEST MAIN STREET TUPELO, MS 38804
TELEPHONE: (662) 844-4403
FAX: (662) 844-5030

PROJECT TITLE
USM - CENTURY PARK SOUTH
IHL# 208-297
HATTIESBURG, MISSISSIPPI

THE UNIVERSITY OF SOUTHERN MISSISSIPPI

PROJECT NO: 2012020
DRAWN BY: BKS, JCF
CHECKED BY: JPH
DATE ISSUED: 04 MAR 2013

REVISIONS & ADDENDUMS

SHEET TITLE
CENTRAL PLANT - EXTERIOR ELEVATIONS

SHEET NUMBER
A201CP

Plot Date: BID DOCUMENTS - 04 MAR 2013

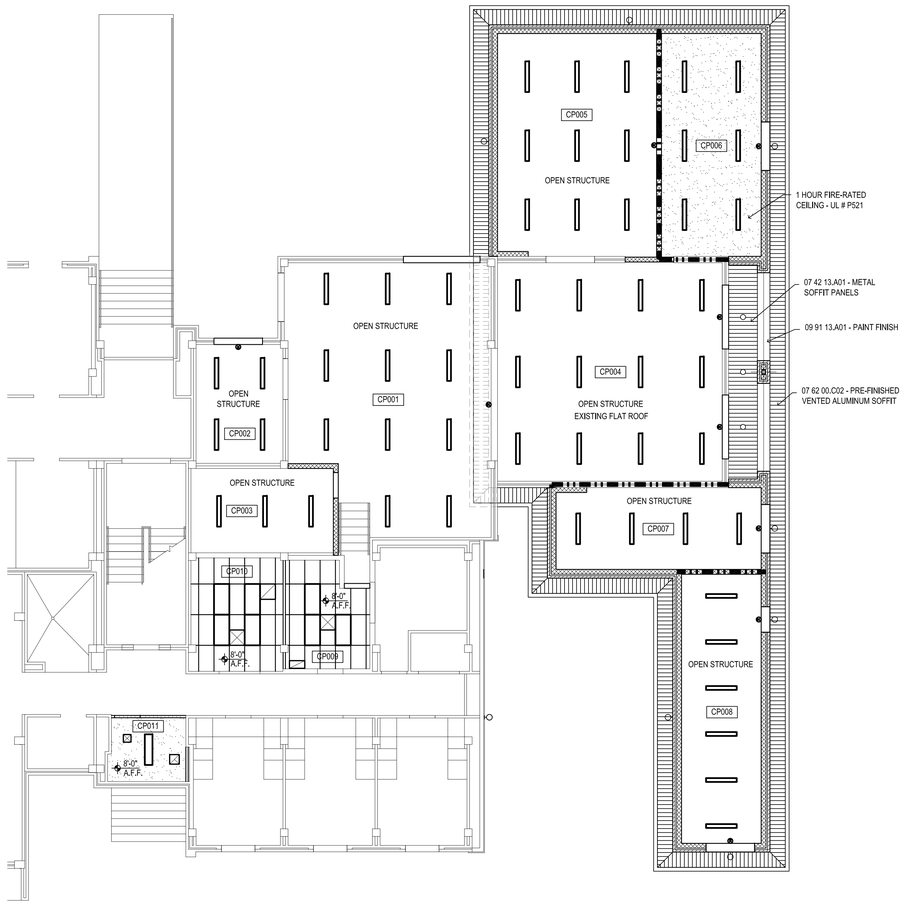

1 — REFLECTED CEILING PLAN
1/8"=1'-0"
CENTRAL PLANT
NORTH

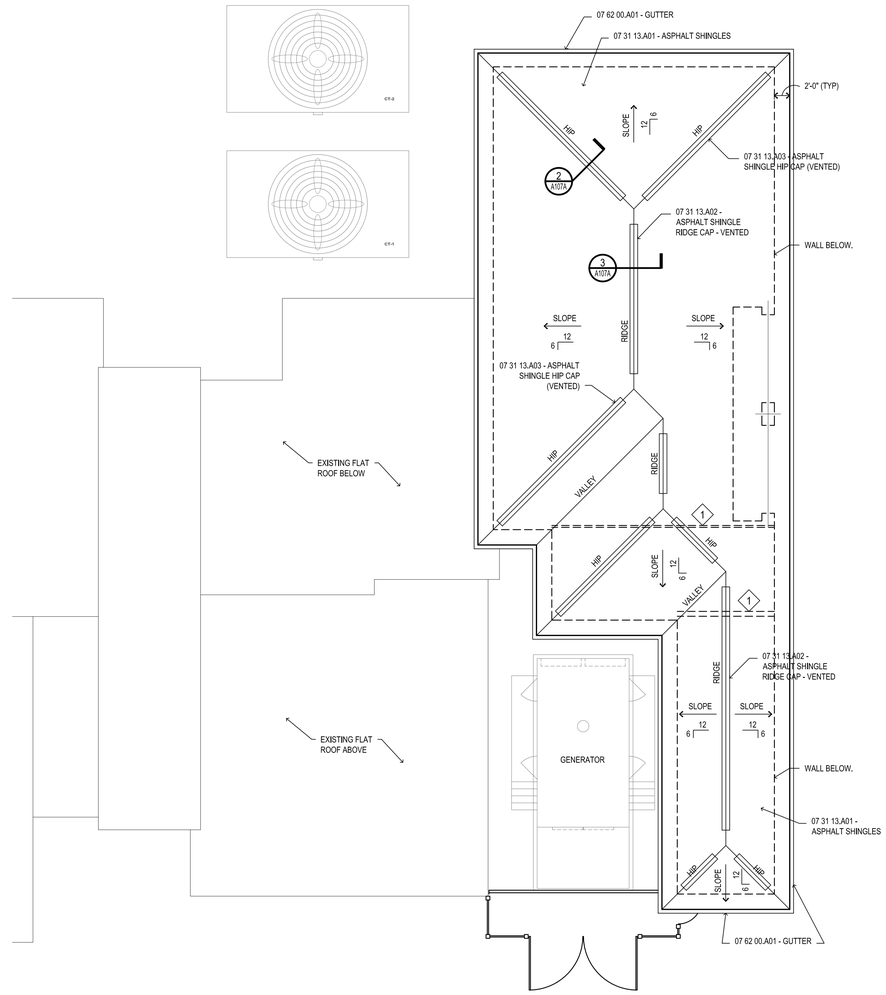

2 — ROOF PLAN
1/8"=1'-0"
CENTRAL PLANT
NORTH

MATERIALS KEYING

DIVISION 7 - THERMAL AND MOISTURE PROTECTION

07 31 13 - ASPHALT SHINGLES
07 31 13.A01 - ASPHALT SHINGLES
07 31 13.A02 - ASPHALT SHINGLE RIDGE CAP - VENTED
07 31 13.A03 - ASPHALT SHINGLE HIP CAP (VENTED)

07 42 13 - METAL SOFFIT PANELS
07 42 13.A01 - METAL SOFFIT PANELS

07 62 00 - PRE-MANUFACTURED METAL
07 62 00.A01 - GUTTER
07 62 00.C02 - PRE-FINISHED VENTED ALUMINUM SOFFIT

DIVISION 9 - FINISHES

09 91 13 - EXTERIOR PAINTING
09 91 13.A01 - PAINT FINISH

CEILING LEGEND

- 2X2 ACOUSTIC LAY-IN CEILING TILE @ 8'-0" A.F.F. UNLESS NOTED OTHERWISE
- 5/8" TYPE "X" GYPSUM BOARD @ 8'-0" A.F.F. UNLESS NOTED OTHERWISE
- 24" X 48" LIGHT FIXTURE SEE ELECTRICAL
- 16" X 48" LIGHT FIXTURE SEE ELECTRICAL
- 12" X 48" LIGHT FIXTURE SEE ELECTRICAL
- SURFACE MOUNTED EXTERIOR LIGHT FIXTURE - SEE ELECTRICAL
- SUPPLY DIFFUSER SEE MECHANICAL
- RETURN AIR GRILLE SEE MECHANICAL
- EXHAUST GRILLE SEE MECHANICAL
- 0'-0" A.F.F. — CEILING HEIGHT ABOVE FINISHED FLOOR

KEYNOTES

1. TAKE FIRE WALL (20)(" METAL STUD WITH 5/8" GYPSUM BOARD BOTH SIDES) FROM EXISTING ROOF TO NEW ROOF DECK.
2. TAKE CMU FIRE WALL TO ROOF DECK.

GENERAL NOTES

A. REFLECTED CEILING PLAN NOTES BELOW ARE REFERENCED ON THE 1/8" SCALE REFLECTED CEILING PLANS (A400 SERIES) FOR RESIDENTIAL AREAS. REFER TO THE 1/8" SCALE FLOOR PLANS (A100 SERIES) DRAWINGS FOR ADDITIONAL PLAN NOTES.

B. UNLESS NOTED OTHERWISE, DIMENSIONS INDICATED ON THE REFLECTED CEILING PLANS ARE TO THE FACE OF FINISH OR CENTERLINE OF FIXTURE AS APPLICABLE.

C. REFER TO A000 SERIES DRAWINGS FOR PARTITION TYPES.

D. CENTER AND SYMMETRICALLY LOCATE LIGHT FIXTURES IN ROOM OR DEFINED AREA OF ROOM OR SOFFIT UNLESS INDICATED OTHERWISE.

E. ALL DEVICES MOUNTED IN OR ON ACOUSTIC CEILING TILES ARE TO BE CENTERED.

F. SPRINKLER HEADS ARE TO BE GENERALLY LOCATED IN CENTERS OF ACOUSTIC CEILING TILES AND SPACED SYMMETRICALLY WITH RESPECT TO LIGHT FIXTURES, GRILLES, DIFFUSER AND OTHER CEILING ELEMENTS TO THE GREATEST EXTENT PRACTICAL.

G. REFER TO APPLICABLE MECHANICAL AND ELECTRICAL DRAWINGS FOR COMPLETE LAYOUT OF LIGHT FIXTURES, GRILLES AND DIFFUSERS IN SERVICE AND UTILITY SPACES (INCLUDING ATTICS).

KEY PLAN

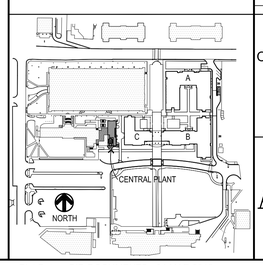

REGISTERED ARCHITECT
Joseph Paul Saunders
3487
Tupelo, MS
STATE OF MISSISSIPPI
04 MARCH 2013

THE McCARTY COMPANY
DESIGN GROUP, P.A.
OFFICE ADDRESS:
533 WEST MAIN STREET
TUPELO, MS 38804
TELEPHONE:
(662) 844-4403
FAX:
(662) 844-5030
MAILING ADDRESS:
P.O. BOX 440
TUPELO, MS 38802

PROJECT TITLE
USM - CENTURY PARK SOUTH
IHL# 208-297
HATTIESBURG, MISSISSIPPI

THE UNIVERSITY OF SOUTHERN MISSISSIPPI

PROJECT NO: 2012020
DRAWN BY: BKS, JCF
CHECKED BY: JPH
DATE ISSUED: 04 MAR 2013

REVISIONS & ADDENDUMS

SHEET TITLE
CENTRAL PLANT - REFLECTED CEILING PLAN & ROOF PLAN

SHEET NUMBER
A401CP

Plot Date: BID DOCUMENTS - 04 MAR 2013

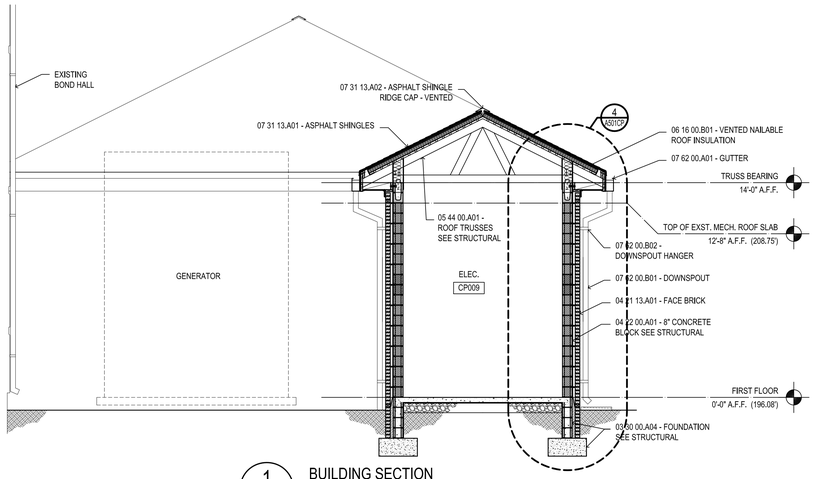

1 — 1/4"=1'-0"

BUILDING SECTION

CENTRAL PLANT

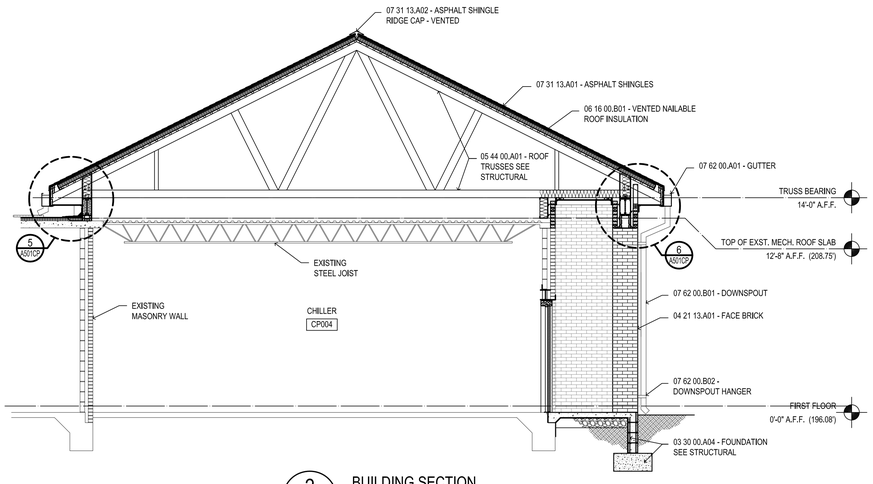

2 — 1/4"=1'-0"

BUILDING SECTION

CENTRAL PLANT

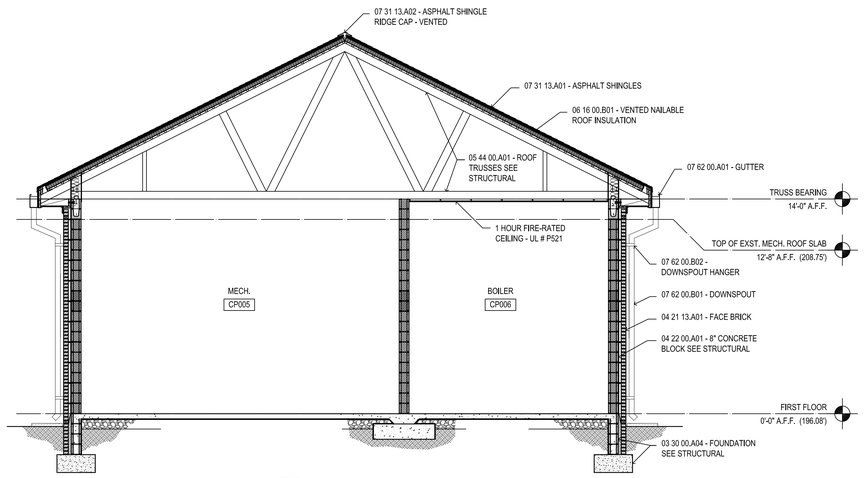

3 — 1/4"=1'-0"

BUILDING SECTION

CENTRAL PLANT

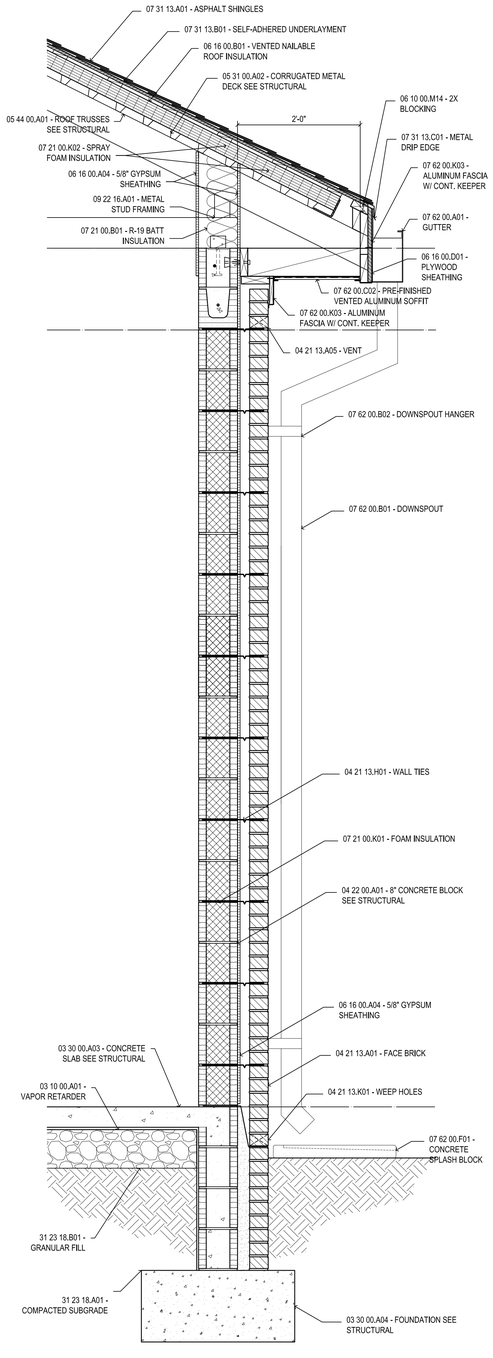

4 — 1"=1'-0"

TYPICAL WALL SECTION

A501CP

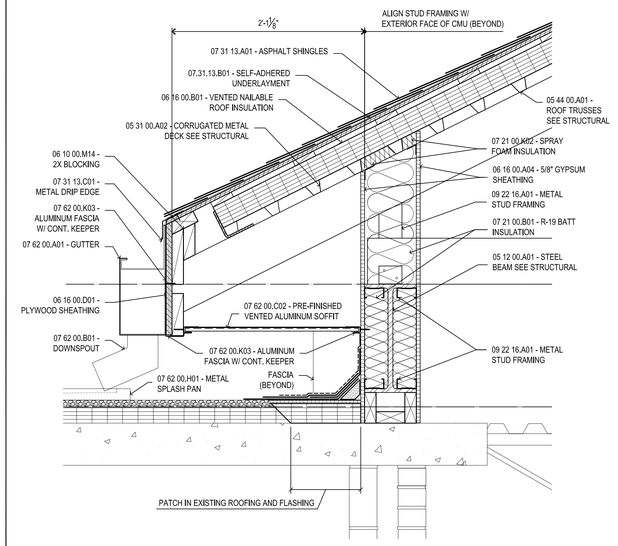

5 — 1-1/2"=1'-0"

SOFFIT DETAIL

A501CP

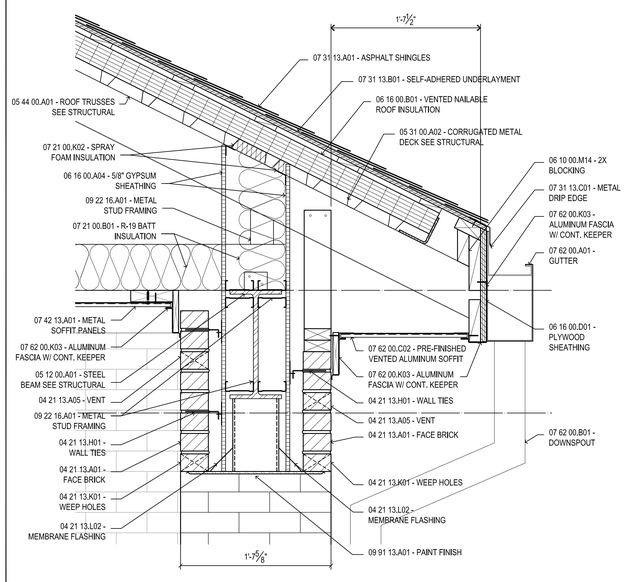

6 — 1-1/2"=1'-0"

SOFFIT DETAIL

A501CP

GENERAL NOTES

A. PERIMETER ENVELOPE SHALL INCLUDE A "AIR BARRIER" BY SEALING THE EXTERIOR WALL ASSEMBLY TIGHT TO STRUCTURAL DECK AROUND THE ENTIRE BUILDING PERIMETER. REFER TO SPECIFICATIONS FOR MATERIALS AND ACCESSORIES NEEDED TO ACHIEVE A CONTINUOUSLY SEALED BARRIER.

B. CONFIRM ALL WINDOW AND DOOR OPENING SIZES WITH MANUFACTURER.

C. ALL EXPOSED STEEL ANGLE LINTELS TO BE FIELD PAINTED.

D. EXTEND FLASHING THROUGH VENEER, ACROSS AIR SPACE BEHIND VENEER, UP AND BEHIND FACE OF CONTINUOUS INSULATION AT LEAST 8 INCHES; WITH UPPER EDGE TUCKED UNDER BUILDING WRAP, LAPPING AT LEAST 4 INCHES.

MATERIAL KEYING

DIVISION 3 - CONCRETE

03 10 00 - CONCRETE FORMING AND ACCESSORIES
03 10 00.A01 - VAPOR RETARDER

03 30 00 - CAST-IN-PLACE CONCRETE
03 30 00.A03 - CONCRETE SLAB SEE STRUCTURAL
03 30 00.A04 - FOUNDATION SEE STRUCTURAL

DIVISION 4 - MASONRY

04 21 13 - UNIT MASONRY
04 21 13.A01 - FACE BRICK
04 21 13.A05 - VENT
04 21 13.H01 - WALL TIES
04 21 13.K01 - WEEP HOLES
04 21 13.L02 - MEMBRANE FLASHING

04 22 13 - CONCRETE UNIT MASONRY
04 22 00.A01 - 8" CONCRETE BLOCK SEE STRUCTURAL

DIVISION 5 - METALS

05 12 00 - STRUCTURAL STEEL FRAMING
05 12 00.A01 - STEEL BEAM SEE STRUCTURAL

05 31 00 - STEEL DECKING
05 31 00.A02 - CORRUGATED METAL DECK SEE STRUCTURAL

05 44 00 - COLD-FORMED STEEL TRUSSES
05 44 00.A01 - ROOF TRUSSES SEE STRUCTURAL

DIVISION 06 - WOOD, PLASTICS AND COMPOSITES

06 10 00 - ROUGH CARPENTRY
06 10 00.M14 - 2X BLOCKING

06 16 00 - SHEATHING
06 16 00.A04 - 5/8" GYPSUM SHEATHING
06 16 00.B01 - VENTED NAILABLE ROOF INSULATION
06 16 00.D01 - PLYWOOD SHEATHING

DIVISION 7 - THERMAL AND MOISTURE PROTECTION

07 21 00 - THERMAL INSULATION
07 21 00.B01 - R-19 BATT INSULATION
07 21 00.K01 - FOAM INSULATION
07 21 00.K02 - SPRAY FOAM INSULATION

07 31 13 - ASPHALT SHINGLES
07 31 13.A01 - ASPHALT SHINGLES
07 31 13.A02 - ASPHALT SHINGLE RIDGE CAP - VENTED
07 31 13.B01 - SELF-ADHERED UNDERLAYMENT
07 31 13.C01 - METAL DRIP EDGE

07 42 13 - METAL SOFFIT PANEL
07 42 13.A01 - METAL SOFFIT PANELS

07 62 00 - SHEET METAL FLASHING AND TRIM
07 62 00.A01 - GUTTER
07 62 00.B01 - DOWNSPOUT
07 62 00.B02 - DOWNSPOUT HANGER
07 62 00.C02 - PRE-FINISHED VENTED ALUMINUM SOFFIT
07 62 00.F01 - CONCRETE SPLASH BLOCK
07 62 00.H01 - METAL SPLASH PAN
07 62 00.K03 - ALUMINUM FASCIA W/ CONT. KEEPER

DIVISION 9 - FINISHES

09 22 16 - NON-STRUCTURAL METAL FRAMING
09 22 16.A01 - METAL STUD FRAMING

09 91 13 - EXTERIOR PAINTING
09 91 13.A01 - PAINT FINISH

DIVISION 31 - EARTHWORK

31 23 18 - EARTHWORK FOR STRUCTURES
31 23 18.A01 - COMPACTED SUBGRADE
31 23 18.B01 - GRANULAR FILL

KEY PLAN

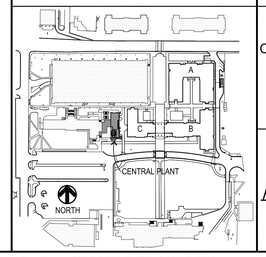

REGISTERED ARCHITECT — Thomas Paul Saunders — 3982 — Tupelo, MS — STATE OF MISSISSIPPI — 04 MARCH 2013

THE McCARTY COMPANY DESIGN GROUP, P.A.
OFFICE ADDRESS: 533 WEST MAIN STREET TUPELO, MS 38804
MAILING ADDRESS: P.O. BOX 440 TUPELO, MS 38802
TELEPHONE: (662) 844-4400 FAX: (662) 844-0530

PROJECT TITLE
USM - CENTURY PARK SOUTH
IHL# 208-297
HATTIESBURG, MISSISSIPPI

THE UNIVERSITY OF SOUTHERN MISSISSIPPI

PROJECT NO: 2012020
DRAWN BY: BKS, JCF
CHECKED BY: JPH
DATE ISSUED: 04 MAR 2013

REVISIONS & ADDENDUMS

SHEET TITLE
CENTRAL PLANT - BUILDING SECTIONS & DETAILS

SHEET NUMBER
A501CP

Plot Date: BID DOCUMENTS - 04 MAR 2013

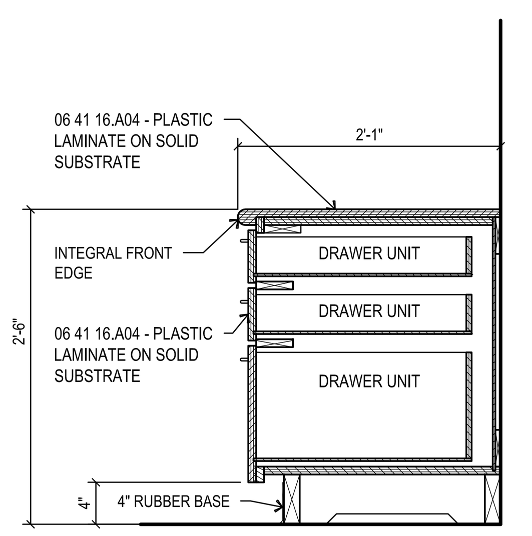

8 **DETAIL**
1"=1'-0"
POLICE KIOSK

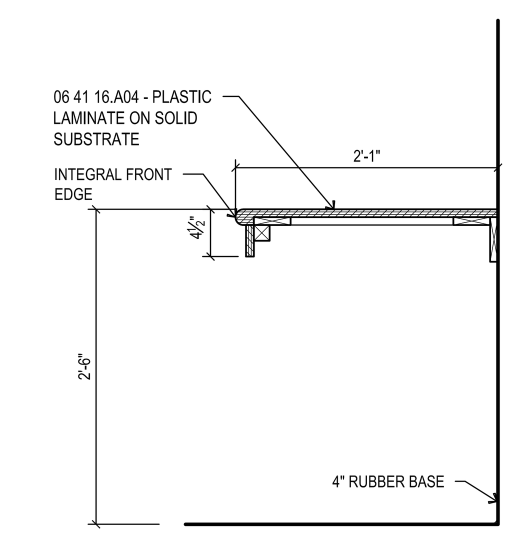

9 **DETAIL**
1"=1'-0"
POLICE KIOSK

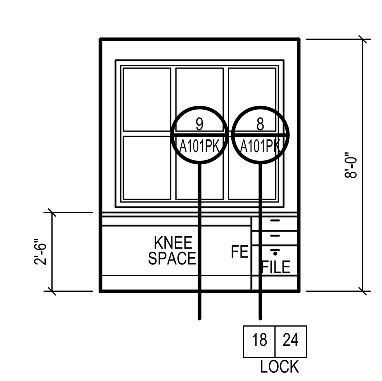

10 **INTERIOR ELEVATION**
1/4"=1'-0"
POLICE KIOSK

MARK	DOOR / CASED OPENING							FRAME						REMARKS
	SIZE WIDTH	SIZE HEIGTH	SIZE THICKNESS	TYPE	MATERIAL	CLOSER	LABEL	TYPE	MATERIAL	HEAD DETAIL	JAMB(R) DETAIL	JAMB(L) DETAIL	SILL DETAIL	
DOOR SCHEDULE														
PK001	3'-0"	7'-0"	1 3/4"	A	ALUM	Y	-	1	ALUM					-
PK002	3'-0"	7'-0"	1 3/4"	A	ALUM	Y	-	1	ALUM					-

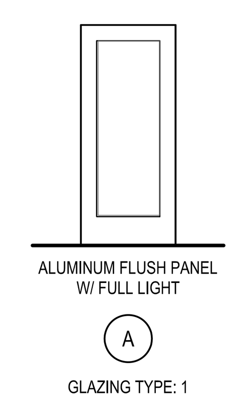

11 **DOOR TYPES**
1/4"=1'-0"
POLICE KIOSK

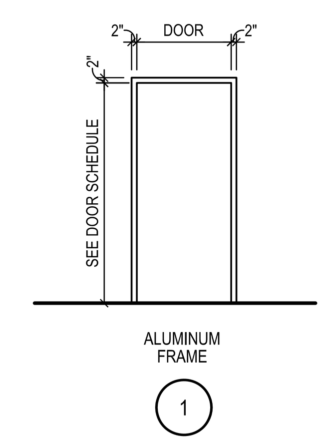

12 **FRAME TYPES**
1/4"=1'-0"
POLICE KIOSK

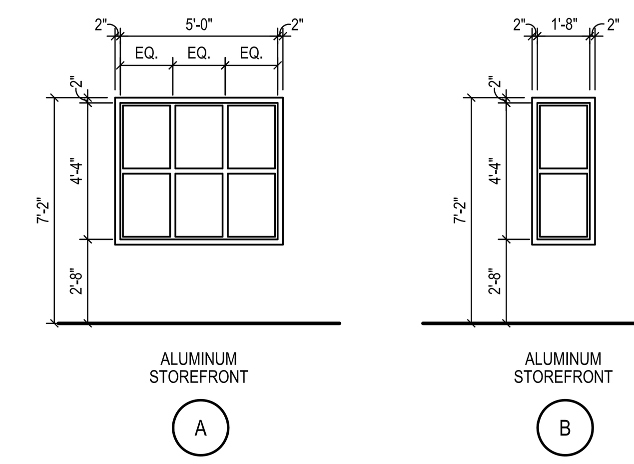

13 **WINDOW TYPES**
1/4"=1'-0"
POLICE KIOSK

MATERIAL KEYING

DIVISION 03 - CONCRETE

03 30 00 - CAST-IN-PLACE CONCRETE
03 30 00.A03 - CONCRETE SLAB SEE STRUCTURAL
03 30 00.A04 - FOUNDATION SEE STRUCTURAL

DIVISION 04 - MASONRY

04 21 13 - UNIT MASONRY
04 21 13.A01 - FACE BRICK
04 21 13.B01 - SOLDIER COURSE
04 21 13.H01 - WALL TIES
04 21 13.K01 - WEEP HOLES
04 21 13.L02 - MEMBRANE FLASHING
04 21 13.Q03 - FILL CAVITY W/ 2500 PSI COARSE GROUT

DIVISION 05 - METALS

05 12 00 - STRUCTURAL STEEL FRAMING
05 12 00.A01 - STEEL BEAM SEE STRUCTURAL
05 12 00.B01 - TUBE COLUMN SEE STRUCTURAL

05 31 00 - STEEL DECKING
05 31 00.A02 - CORRUGATED METAL DECK SEE STRUCTURAL

05 44 00 - COLD-FORMED STEEL TRUSSES
05 44 00.A01 - ROOF TRUSSES SEE STRUCTURAL

05 50 00 - METAL FABRICATIONS
05 50 00.B02 - ANGLE LINTEL SEE STRUCTURAL

MATERIAL KEYING

DIVISION 06 - WOOD, PLASTICS AND COMPOSITES

06 10 00 - ROUGH CARPENTRY
06 10 00.M35 - 2X TREATED BLOCKING

06 16 00 - SHEATHING
06 16 00.B02 - NAILABLE ROOF INSULATION

06 41 16 - PLASTIC-LAMINATE-FACED ARCHITECTURAL CABINETS
06 41 16.A04 - PLASTIC LAMINATE ON SOLID SUBSTRATE
06 41 16.G07 - SOLID SURFACE WINDOW STOOL

DIVISION 07 - THERMAL AND MOISTURE PROTECTION

07 21 00 - THERMAL INSULATION
07 21 00.B01 - R-19 BATT INSULATION
07 21 00.F01 - 1" BOARD INSULATION

07 25 00 - WEATHER BARRIERS
07 25 00.A01 - WEATHER BARRIER

07 41 13.16 - STANDING SEEM METAL ROOF PANELS
07 41 13.16.A01 - COPPER SHEET STANDING-SEAM ROOF PANELS
07 41 13.16.A02 - COPPER SHEET HIP CAP
07 41 13.16.A03 - METAL DRIP
07 41 13.16.A04 - SELF-ADHERED UNDERLAYMENT

07 62 00 - SHEET METAL FLASHING AND TRIM
07 62 00.A01 - GUTTER
07 62 00.B01 - DOWNSPOUT
07 62 00.C02 - PRE-FINISHED VENTED ALUMINUM SOFFIT
07 62 00.C04 - PREMANUFACTURED ALUMINUM TRIM PROFILE #1
07 62 00.C10 - PREMANUFACTURED ALUMINUM TRIM ASSEMBLY #1

07 92 00 - JOINT SEALANTS
07 92 00.D01 - BACKER ROD & SEALANT
07 92 00.H01 - SEALANT

DIVISION 08 - OPENINGS

08 41 00 - ENTRANCES AND STOREFRONTS
08 41 13.A01 - ALUMINUM FRAMING SEE SCHEDULE

08 80 00 - GLAZING
08 80 00.M01 - GLAZING SEE SCHEDULE

DIVISION 09 - FINISHES

09 22 16 - NON-STRUCTURAL METAL FRAMING
09 22 16.E10 - 4" METAL STUDS @ 16" O.C.

09 29 00 - GYPSUM BOARD
09 29 00.E01 - 5/8" TYPE "X" GYPSUM BOARD

09 65 00 - RESILIENT FLOORING
09 65 13.A01 - 4" RUBBER BASE

DIVISION 31 - EARTHWORK

31 23 18 - EARTHWORK FOR STRUCTURES
31 23 18.A01 - COMPACTED SUBGRADE
31 23 18.B01 - GRANULAR FILL

DIVISION 32 - EXTERIOR IMPROVEMENTS

32 16 13 - CONCRETE CURBS AND SIDEWALKS
32 16 13.B02 - 4" CONCRETE WALK W/ BROOM FINISH
32 16 13.J08 - 1/2" PRE-MOLDED E.J. FILLER & SEALANT

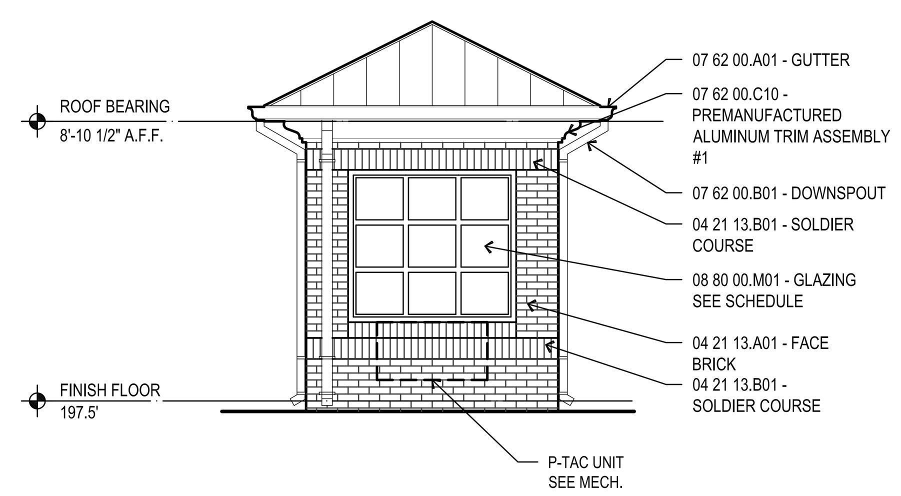

5 **FRONT ELEVATION**
1/4"=1'-0"
POLICE KIOSK

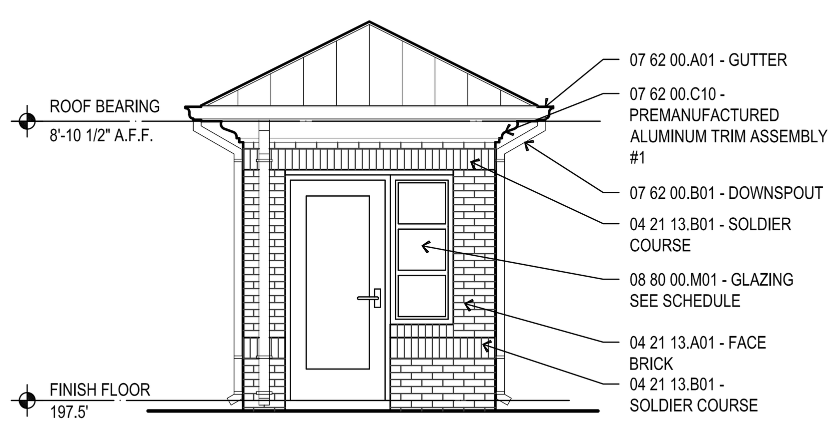

6 **SIDE ELEVATION**
1/4"=1'-0"
POLICE KIOSK

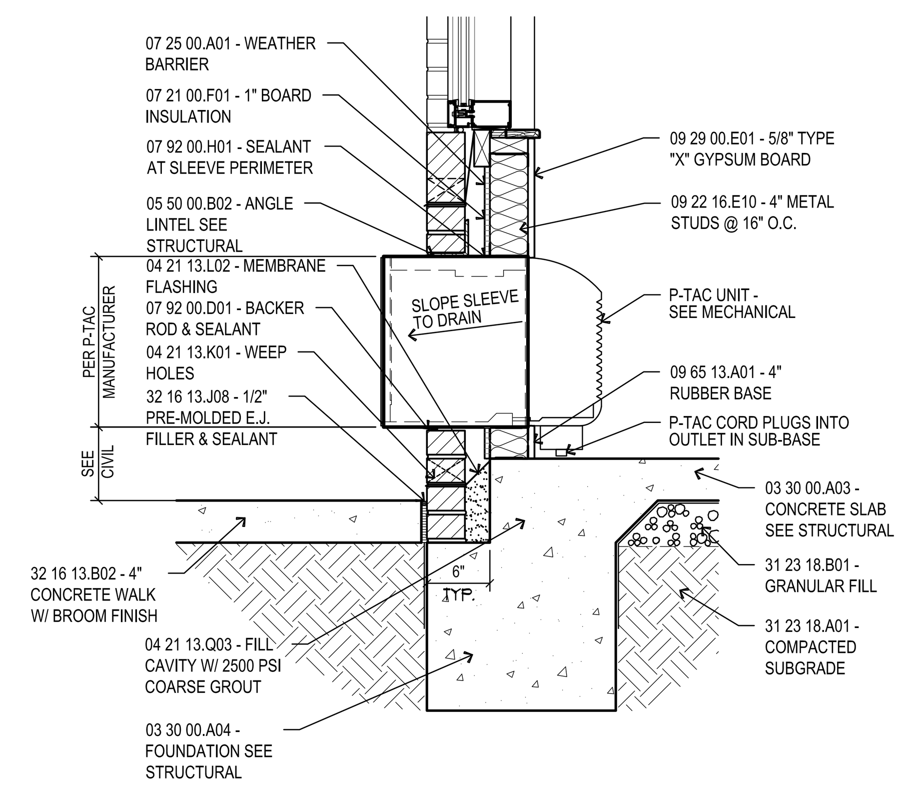

7 **WALL SECTION @ P-TAC UNIT**
1"=1'-0"
POLICE KIOSK

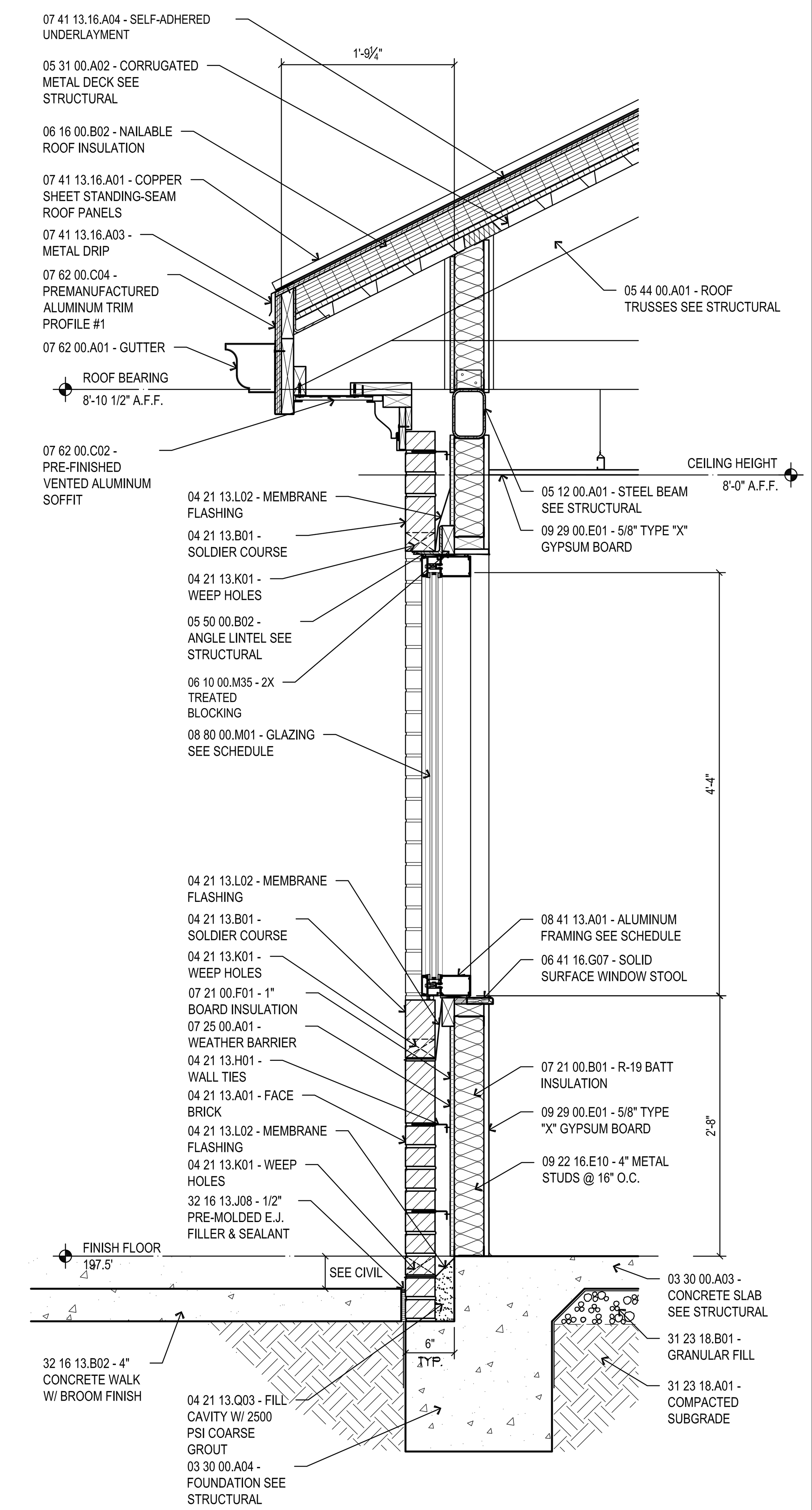

4 **BUILDING SECTION**
1"=1'-0"
POLICE KIOSK

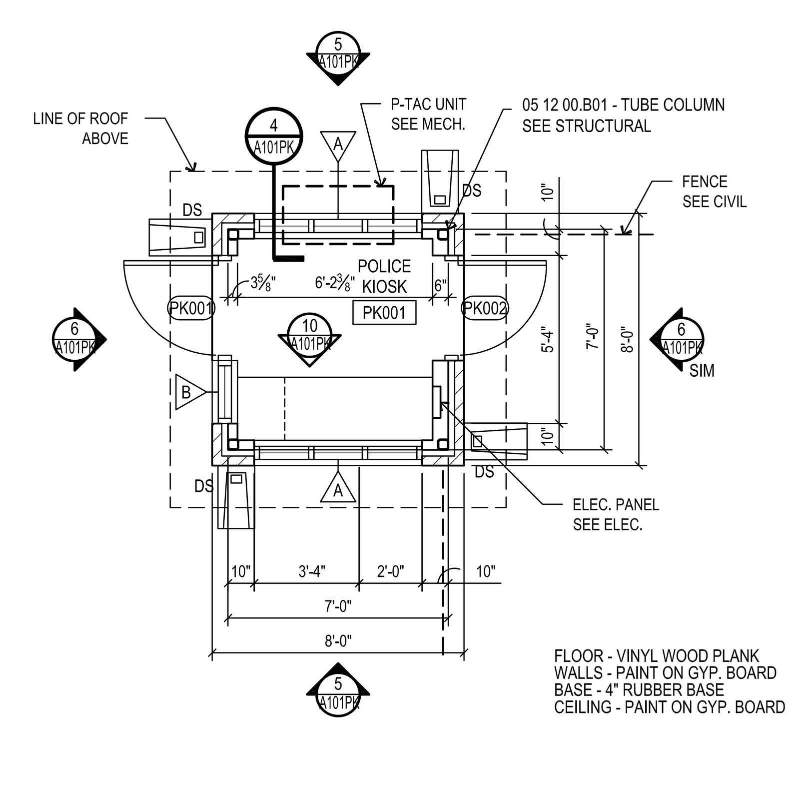

NORTH
1 **FLOOR PLAN**
1/4"=1'-0"
POLICE KIOSK - SQUARE FOOTAGE = 50

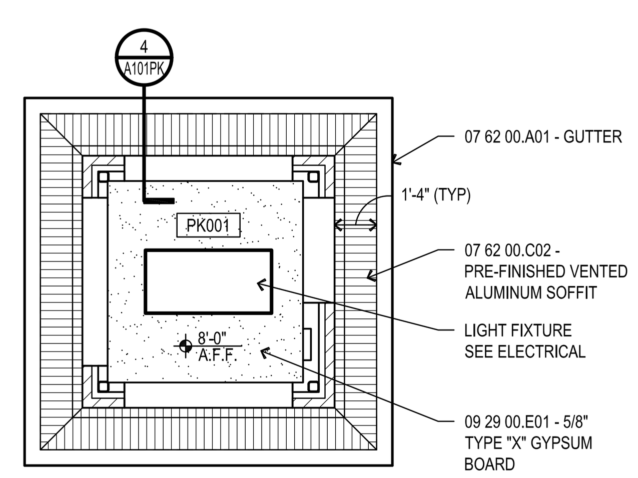

NORTH
2 **REFLECTED CEILING PLAN**
1/4"=1'-0"
POLICE KIOSK - SQUARE FOOTAGE = 50

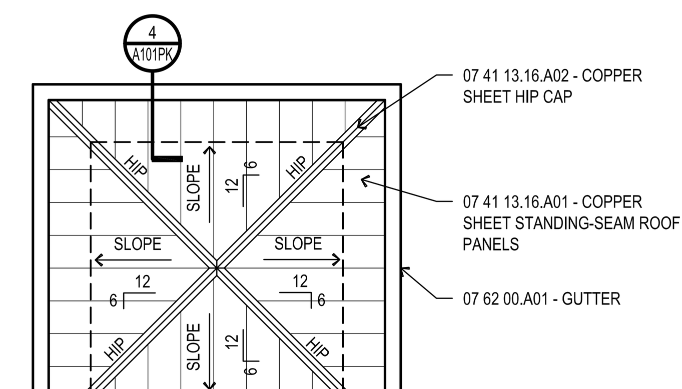

NORTH
3 **ROOF PLAN**
1/4"=1'-0"
POLICE KIOSK - SQUARE FOOTAGE = 50

LEGEND

DS	07 62 00.B01 - DOWNSPOUT
▭	07 62 00.F01 - CONCRETE SPLASH BLOCK

GENERAL NOTES

1. ALL INTERIOR AND EXTERIOR DIMENSIONS ARE TO FACE OF FRAMING UNLESS NOTED OTHERWISE.
2. ALL EXTERIOR WALLS ARE 18 GAUGE 3⅝" STEEL STUDS UNLESS NOTED OTHERWISE.
3. CONTRACTOR TO PROVIDE WOOD BLOCKING AS NECESSARY IN WALLS FOR MILLWORK, ACCESSORIES, EQUIPMENT, ETC. COORDINATE WITH PLANS AND INTERIOR ELEVATIONS.

KEY PLAN

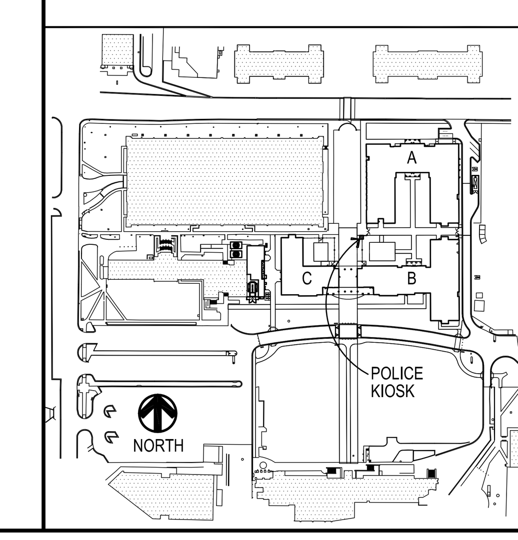

REGISTERED ARCHITECT Thomas D. Saunders 3693 Tupelo, MS STATE OF MISSISSIPPI
04 march 2013

THE McCARTY COMPANY
DESIGN GROUP, P.A.
MAILING ADDRESS: P.O. BOX 440 TUPELO, MS 38802
OFFICE ADDRESS: 533 WEST MAIN STREET TUPELO, MS 38804
TELEPHONE: (662) 844-4400
FAX: (662) 844-0500

PROJECT TITLE
USM - CENTURY PARK SOUTH
IHL# 208-297
HATTIESBURG, MISSISSIPPI

THE UNIVERSITY OF SOUTHERN MISSISSIPPI

PROJECT NO:
• 2012020
DRAWN BY:
• JCF
CHECKED BY:
• JPH
DATE ISSUED:
• 04 MAR 2013

REVISIONS & ADDENDUMS

SHEET TITLE
POLICE KIOSK FLOOR PLAN, ROOF PLAN, RCP & ELEV.

SHEET NUMBER
A101PK

Plot Date: BID DOCUMENTS - 04 MAR 2013

Code References

International Building Code	2012	IBC
National Fire Code	2012	NFC
ADA Accessibility Guidelines	2010	ADAAG
ICC/ANSI A117.1	2009	ANSI

Occupancy Classification	Location
Residential Group R R-2 (Dormitory)	IBC 310.4
Business Group B (At Clinic and Luckyday offices)	IBC 304
Assembly Group A (At multi-purpose room at Luckyday)	IBC 303

Construction Type

Type IIB Unprotected / Sprinklered — IBC T503

Allowable Heights / Area

Basic Allowable Heights = 55 feet (4 story) — IBC T503
Basic Allowable Area = 16,000 sf/floor

Note: +20 feet in height and + one story for sprinkler — IBC 504.2
NFPA 13 sprinkler required (903.3.1.1)
= 75 feet (5 story)
Note: +200% area increase for sprinkler — IBC 506.3
= 48,000 sf/floor

Actual Tabulated Area

Building A footprint- 23,760 sf/floor <48,000 sf/floor	Total Area = 117,640 gsf
Building B footprint- 18,010 sf/floor <48,000 sf/floor	Total Area = 89,900 gsf
Building C footprint- 9,365 sf/floor <48,000 sf/floor	Total Area = 46,990 gsf

Fire Resistance / Protection
No ratings required — IBC T601

Fire Separation Distance / Rating
Separation < 10 feet requires 1 hour exterior walls (Type IIB) — IBC T602
Separation > 10 feet requires no rating at exterior walls (Type IIB) — IBC T602
Occupancy Separation
Separation of Residential and Business Occupancies (between Clinic/Dorm and Luckyday/Dorm) = 1 hour where sprinklered — IBC T508.4
Separation of Residential and Assembly (MP Room/Dorm) = 1 hour where sprinklered
Separation of Business and Assembly (Luckyday/MP Room) = 1 hour where sprinklered

Miscellaneous Fire Requirements

Exit Access Corridor Walls
Required to be ½ hour with 20 minute self-closing doors at Residential
No rating required at Business and Assembly — IBC T1018.1

Exterior Walls
No limit on unprotected openings, based on no rating requirements at exterior walls (T601) — IBC T705.8

No requirement for vertical separation of opening for sprinklered building — IBC 704.9

Interior exit stairway and exterior walls
Exterior walls of the interior exit stairway shall comply with 705 for exterior walls. Where non-rated walls or unprotected openings enclose the exterior of the stairway and the walls or openings are exposed by other parts of the building at an angle of less than 180 degrees, the building within 10 feet horizontally of a non-rated wall or unprotected opening shall have a fire-resistance rating of not less than 1 hour. Openings within such exterior walls shall be protected by opening protectives have a fire protective rating of not less than 3/4 hour. — IBC 1022.7

Vertical Openings (Stairs / Elevator)
Required to be 2 hour protected (per 5 story) with 90 min doors — IBC 1022.2

Shaft Enclosures
Required to be 2 hour fire rated where connecting four stories or more; 1 hour fire rated where connecting less than four stories. — IBC 713.4
Shafts that do not extend to bottom of building are to be enclosed at the lowest level with construction of the same fire-resistance rating as the lowest floor through which the shaft passes, but not less than the rating of the shaft. — IBC 713.11

Fire dampers are required where shaft enclosures are penetrated. — IBC 713.8

Shafts that do not extend to the underside of the roof sheathing or deck shall be enclosed at the top with construction of the same fire rating as the topmost floor penetration by the shaft, but not less than the rating of the shaft. — IBC 713.12

Elevator Lobbies

Elevators are not required to be accessed from an area of refuge or a horizontal exit in buildings and facilities throughout equipped with an automatic sprinkler system. (exception 2) — IBC 1007.4

Enclosed elevator lobbies are not required where the buildings and facilities throughout equipped with an automatic sprinkler system. (exception 4) — IBC 713.14.1

Accessible Means of Egress
Elevators required as at least one of the required accessible means of egress in buildings where a required accessible floor is four or more stories above or below a level of exit discharge. — IBC 1007.2.1

Areas of Refuge
Every required area of refuge shall have direct access to an enclosed stair or elevator. Where an elevator lobby is used as an area of refuge, the shaft and elevator lobby shall be a smokeproof enclosure except where the elevators are in an area of refuge formed by a horizontal exit or smoke barrier. — IBC 1007.6

Each area of refuge shall accommodate one wheelchair space of 30"x48" for every 200 occupants that the area of refuge serves. — IBC 1007.6.1

Each area of refuge shall be separated from the remainder of the story by a smoke barrier complying with 709. — IBC 1007.6.2
One hour fire rating required for smoke barriers — IBC 709.3
Doors in smoke barriers to be 20 minute rated — IBC T716.5

Sleep Spaces (Dorm Rooms)
Must comply with IBC 708 — IBC 420.2
1 hour wall required between rooms — IBC 708.3
· Exception – for type IIB – ½ hour required where sprinklered

Room walls continuous to roof deck — IBC 708.4
· Exception – not required with non-combustible materials
· Exception – no draft stopping required where sprinklered

Other Spaces

Furnace Room (equipment exceeds 400,000 btu/hr)	1 hour or sprinkler	IBC T509
Boiler Room (equipment exceeds 15 psi @ 10hp)	1 hour or sprinkler	
Laundry Rooms over 100 sf	1 hour or sprinkler	
Waste / Linen Rooms over 100 sf	1 hour or sprinkler	

Means of Egress

Building A - 23,760 sf/floor
Building B - 18,010 sf/floor
Building C - 9,365 sf/floor
Residential (Dormitory 50 gsf)
A = Occupant load per floor = 23,760 / 50 GSF/person = 475 occupants per floo — IBC T1004.1.1
B = Occupant load per floor = 18,010 / 50 GSF/person = 360 occupants per floor
C = Occupant load per floor = 9,365 / 50 GSF/person = 187 occupants per floor
Assembly (Concentrated - chairs unfixed 7nsf/person)
Multi-Purpose Room (Luckyday) = 1,610nsf / 7nsf/person = 230 occupants
Business/Outpatient (100 gsf)
Luckyday office suite = 4,150 gsf / 100gsf/person = 42 occupants
Clinic = 13,000 gsf / 100gsf/person = 130 occupants

Exit travel distance from most remote point exit or stair door ≤ 250 ft. where sprinklered — IBC T1016.2
Dead end corridor ≤ 50 ft. for Business and Residential — BC 1018.4

Delayed egress allowed once per exit path — IBC 1008.1.9.7
Egress Stair Door locking — IBC 1008.1.9.11
Interior stairway means of egress doors shall be openable from both sides with-out the use of a key or special knowledge or effort. Stairway discharge doors can be locked from side opposite egress (exterior). Stairways serving not more than four stories are permitted to be locked from the side opposite egress and shall unlock on fire alarm. Doors arranged per 403.5.3 do not apply. Per 403.5.3, an emergency call station can be installed (1 per 5 floors), allowing doors to be locked from inside stairwell, but shall unlock on fire alarming.

Corridor width ≤ 44 inches — IBC 1023.2

Stairs
Egress width (sprinklered) — IBC T1005.3.1
Stairs = .2 / occupant
Other components = .15 / occupant

2 exits per floor required (including Luckyday Multi-Purpose Room) — IBC 1021.2
Stairs not less than 44 inches wide clear (not including handrail protrusion) — IBC 1009.4

Building A (3 egress stairs); load at each stair = 163 occupants/stair
Building B (3 egress stairs); load at each stair = 126 occupants/stair
Building C (2 egress stairs); load at each stair = 96 occupants/stair
Multi-Purpose Room (2 egress stair); load at each stair = 115 occupants/stair

Building A = 163 occupants x .2 = 32.6 inches (per egress stair)
Building B = 126 occupants x .2 = 25.2 inches (per egress stair)
Building C = 96 occupants x .2 = 19.2 inches (per egress stair)
Multi-Purpose Room = 115 occupants x .2 = 23 inches (per egress stair)

Building A = 488 occupants x .15 = 73.2 inches (egress doors total by floor)
Building B = 379 occupants x .15 = 57 inches (egress doors total by floor)
Building C = 192 occupants x .15 = 29 inches (egress doors total by floor)
Multi-Purpose Room = 230 occupants x .15 = 35 inches (egress doors total by floor)

Interior Exit Stairways shall be included to meet one or more means of egress (required number of exits). All interior exit stairways shall be enclosed. — IBC 1009.2.1, IBC 1021.1

Floor opening between stories created by Exit Access Stairways shall be enclosed, except in other than Group I-2 and I-3 occupancies, where they serve, or atmospherically communicate between, only two stories. — IBC 1009.3 (ex. 1)
Exit Access Stairways are included as "exits" and count toward the total required. — IBC 1021.2

Required exits shall be located in a manner that makes their availability obvious. Exits shall be unobstructed at all times. Exit and exit access doorways shall be arranged in accordance with Sections 1015.2.1. — IBC 1015.2

Where two exits or exit access doorways are required from any portion of the exit access, the exit doors or exit access doorways shall be placed a distance apart equal to not less than one-half (one-third where sprinklered) of the length of the maximum overall diagonal dimension of the building or area to be served measured in a straight line between exit doors or exit access doorways. — IBC 1015.2.1

Elevator Access
Where elevators are provided in buildings four or more stories above grade plane or four or more stories below grade plane, at least one elevator shall be provided for fire department emergency access to all floors. The elevator car shall be of such a size and arrangement to accommodate an ambulance stretcher 24-inch by 84-inch with not less than 5" radius corners, in the horizontal, open position and shall be identified by the international symbol for emergency medical services (star of life). — IBC 3002.4

Accessible Dwelling Units
Refer to ICC/ANSI A117.1-2009 for requirements for "Accessible Units" — ANSI 1002
Refer to ICC/ANSI A117.1-2009 for requirements for "Type A Units" — ANSI 1003
Refer to ICC/ANSI A117.1-2009 for requirements for "Type B Units" — ANSI 1004
Refer to ADAAG for requirements for Accessible Guest Rooms — ADA T224.2
Refer to ADAAG for requirements for Guest Rooms with Communication Features — ADA T224.4

Calculated by project:
Providing 457 double units, 40 single units (497 total units)
When total number of dwelling units is 401 to 500, total number of required accessible dwelling unit is 13. For entirety of project (3 buildings), — IBC T1107.6.1.1, ADA T224.2
13 accessible double units required (9 with transfer showers, 4 with roll-in showers);
2 accessible single units required (1 with transfer shower, 0 with roll-in shower).

Calculated by buildings:
Building A = 213 double units, 17 single units (230 total units) — IBC T1107.6.1.1, ADA T224.2
When total number of dwelling units is 201 to 300, total number of required accessible dwelling unit is 10 accessible double units (7 with transfer showers, 3 with roll-in showers); 1 accessible single units required (1 with transfer shower).

Building B = 160 double units, 18 single units (178 total units)
When total number of dwelling units is 151 to 200, total number of required accessible dwelling unit is 8 accessible double units (6 with transfer showers, 2 with roll-in showers); 1 accessible single units required (1 with transfer shower).

Building C = 84 double units, 5 single units (89 total units)
When total number of dwelling units is 76 to 100, total number of required accessible dwelling unit is 5 accessible double units (4 with transfer showers, 1 with roll-in showers); 1 accessible single units required (1 with transfer shower).

Thomas D. Saunders
3693
Tupelo, MS
REGISTERED ARCHITECT
STATE OF MISSISSIPPI
04 march 2013

THE McCARTY COMPANY
DESIGN GROUP, P.A.
MAILING ADDRESS: P.O. BOX 440 TUPELO, MS 38802
OFFICE ADDRESS: 533 WEST MAIN STREET TUPELO, MS 38804
TELEPHONE: (662) 844-4400 FAX: (662) 844-0500

DESIGN ARCHITECT
Hanbury Evans Wright Vlattas + Company
120 Atlantic Street
Norfolk, VA 23510
757.321.9600
www.hewv.com

PROJECT TITLE
USM - CENTURY PARK SOUTH
IHL# 208-297
HATTIESBURG, MISSISSIPPI

THE UNIVERSITY OF SOUTHERN MISSISSIPPI

PROJECT NO:
• 2012020
DRAWN BY:
• JCF
CHECKED BY:
• JPH
DATE ISSUED:
• 04 MAR 2013

REVISIONS & ADDENDUMS

SHEET TITLE
GENERAL BUILDING CODE DATA

SHEET NUMBER
LS001

Plot Date: BID DOCUMENTS - 04 MARCH 2013
3/11/2013 4:56:56 AM

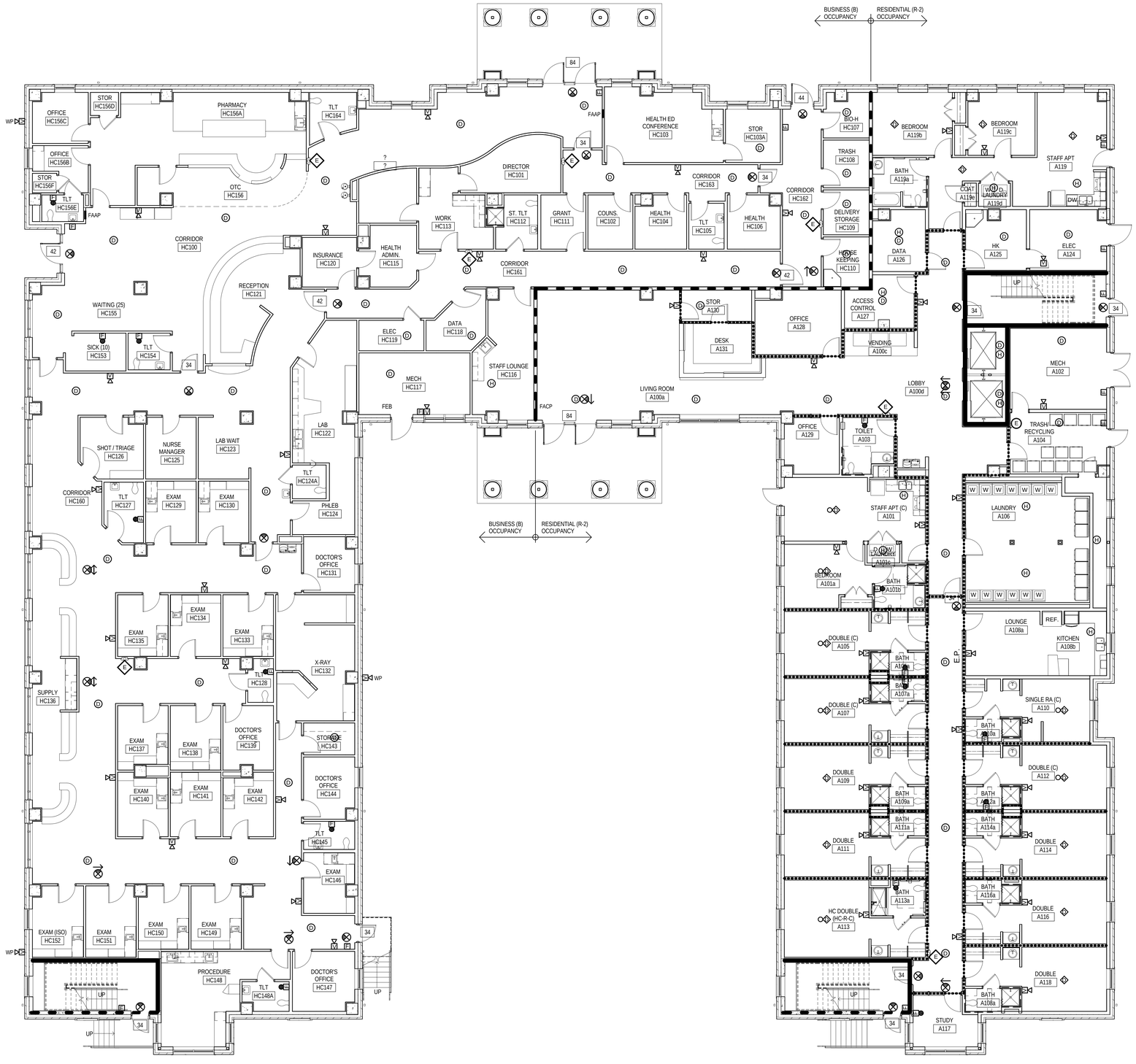

1 BUILDING A - FIRST FLOOR LIFE SAFETY PLAN

1/8" = 1'-0"

RESIDENTIAL (R-2) OCCUPANCY
BUSINESS (B) OCCUPANCY

NORTH

0' 8' 16' 24'

LIFE SAFETY LEGEND

	1 HOUR FIRE RATED CEILING.
	1/2 HOUR FIRE RATED PARTITION.
	1 HOUR FIRE RATED PARTITION.
	2 HOUR FIRE RATED PARTITION.
34	EXIT WIDTH IN INCHES
E	FIRE EXTINGUISHER CABINET
E	FIRE EXTINGUISHER - BRACKET MOUNTED
	EXIT LIGHT (WALL)
	EXIT LIGHT (CEILING)
FAAP	FIRE ALARM ANNUCIATOR PANEL
FACP	FIRE ALARM CONTROL PANEL
F	FIRE ALARM MANUAL PULL STATION
V	FIRE ALARM VOICE EVACUATION WITH LIGHT
V WP	FIRE ALARM VOICE EVACUATION SPEAKER, WEATHERPROOF
F	FIRE ALARM LIGHT ONLY
	FIRE ALARM SMOKE DETECTOR
	FIRE ALARM HEAT DETECTOR
	FIRE ALARM SMOKE DETECTOR WITH SOUNDER BASE
	FIRE ALARM SMOKE DETECTOR WITH SOUNDER BASE AND LIGHT

NOTES:

1. BUILDING IS FULLY SPRINKLERED IN COMPLIANCE WITH NFPA 13
2. TYPICAL EXIT STAIR WIDTH: 42" (CAPACITY 240)
3. TYPICAL EXIT DOOR WIDTH: 34" (CAPACITY 226)
4. SEE LS001 FOR OCCUPANCY LOADS.

REGISTERED ARCHITECT
Jeffrey Charles McCarty
3687
Tupelo, MS
STATE OF MISSISSIPPI
04 March 2013

THE McCARTY COMPANY
DESIGN GROUP, P.A.
TELEPHONE: (662) 844-4400
FAX: (662) 844-0520
OFFICE ADDRESS: 533 WEST MAIN STREET TUPELO, MS 38804
MAILING ADDRESS: P.O. BOX 440 TUPELO, MS 38802

DESIGN ARCHITECT
Hanbury Evans Wright Vlattas + Company
120 Atlantic Street
Norfolk, VA 23510
757.321.9600
www.hew.com

PROJECT TITLE
USM - CENTURY PARK SOUTH
IHL# 208-297
HATTIESBURG, MISSISSIPPI

THE UNIVERSITY OF SOUTHERN MISSISSIPPI

PROJECT NO: 2012020
DRAWN BY: JCF
CHECKED BY: JPH
DATE ISSUED: 04 MAR 2013

REVISIONS & ADDENDUMS

SHEET TITLE
BUILDING A - FIRST SLOOR LIFE SAFETY PLAN

SHEET NUMBER
LS101A

3/11/2013 4:57:22 AM

Plot Date: BID DOCUMENTS - 04 MARCH 2013

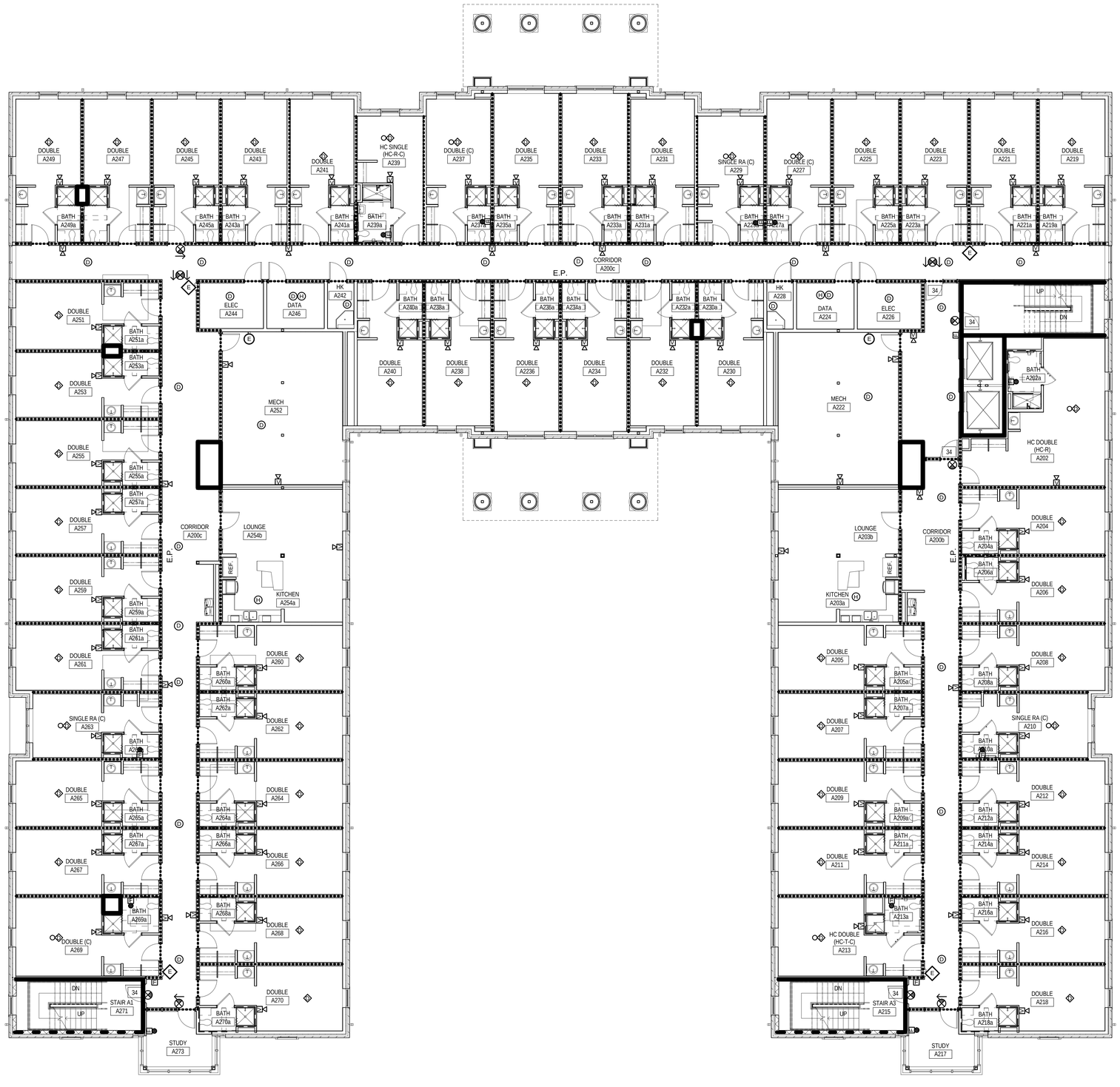

NORTH

1

1/8" = 1'-0"

BUILDING A - SECOND FLOOR LIFE SAFETY PLAN

RESIDENTIAL (R-2) OCCUPANCY

0' 8' 16' 24'

LIFE SAFETY LEGEND

- 1 HOUR FIRE RATED CEILING.
- 1/2 HOUR FIRE RATED PARTITION.
- 1 HOUR FIRE RATED PARTITION.
- 2 HOUR FIRE RATED PARTITION.
- 34 — EXIT WIDTH IN INCHES
- E — FIRE EXTINGUISHER CABINET
- E — FIRE EXTINGUISHER - BRACKET MOUNTED
- EXIT LIGHT (WALL)
- EXIT LIGHT (CEILING)
- FAAP — FIRE ALARM ANNUCIATOR PANEL
- FACP — FIRE ALARM CONTROL PANEL
- F — FIRE ALARM MANUAL PULL STATION
- V — FIRE ALARM VOICE EVACUATION WITH LIGHT
- V WP — FIRE ALARM VOICE EVACUATION SPEAKER, WEATHERPROOF
- F — FIRE ALARM LIGHT ONLY
- D — FIRE ALARM SMOKE DETECTOR
- D — FIRE ALARM HEAT DETECTOR
- S — FIRE ALARM SMOKE DETECTOR WITH SOUNDER BASE
- S — FIRE ALARM SMOKE DETECTOR WITH SOUNDER BASE AND LIGHT

NOTES:

1. BUILDING IS FULLY SPRINKLERED IN COMPLIANCE WITH NFPA 13
2. TYPICAL EXIT STAIR WIDTH: 42" (CAPACITY 240)
3. TYPICAL EXIT DOOR WIDTH: 34" (CAPACITY 226)
4. SEE LS001 FOR OCCUPANCY LOADS.

REGISTERED ARCHITECT — Thomas Jerry Saunders — 3487 — Tupelo, MS — STATE OF MISSISSIPPI — 04 March 2013

THE McCARTY COMPANY
DESIGN GROUP, P.A.

OFFICE ADDRESS:
533 WEST MAIN STREET
TUPELO, MS 38804

TELEPHONE:
(662) 844-4400
FAX:
(662) 844-0520

MAILING ADDRESS:
P.O. BOX 440
TUPELO, MS 38802

DESIGN ARCHITECT
Hanbury Evans Wright Vlattas + Company
120 Atlantic Street
Norfolk, VA 23510
757.321.9600
www.hewv.com

PROJECT TITLE

USM - CENTURY PARK SOUTH
IHL# 208-297

HATTIESBURG, MISSISSIPPI

THE UNIVERSITY OF SOUTHERN MISSISSIPPI

PROJECT NO: 2012020
DRAWN BY: JCF
CHECKED BY: JPH
DATE ISSUED: 04 MAR 2013

REVISIONS & ADDENDUMS

SHEET TITLE

BUILDING A - SECOND FLOOR LIFE SAFETY PLAN

SHEET NUMBER

LS102A

3/11/2013 4:57:51 AM

Plot Date: BID DOCUMENTS - 04 MARCH 2013

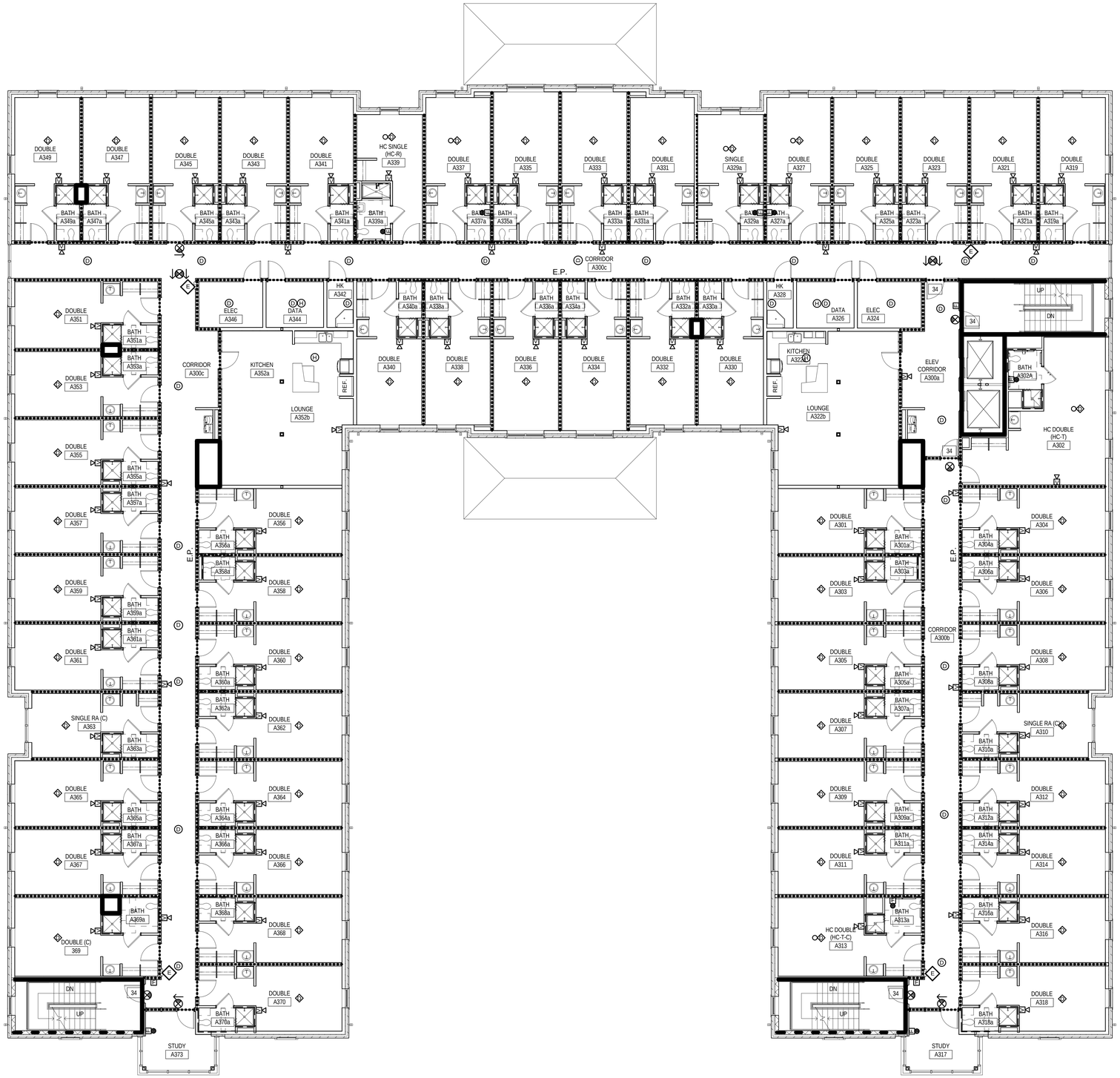

NORTH

1

1/8" = 1'-0"

BUILDING A - THIRD - FIFTH FLOOR LIFE SAFETY PLAN

RESIDENTIAL (R-2) OCCUPANCY

0' 8' 16' 24'

LIFE SAFETY LEGEND

- 1 HOUR FIRE RATED CEILING.
- 1/2 HOUR FIRE RATED PARTITION.
- 1 HOUR FIRE RATED PARTITION.
- 2 HOUR FIRE RATED PARTITION.
- 34 — EXIT WIDTH IN INCHES
- FIRE EXTINGUISHER CABINET
- FIRE EXTINGUISHER - BRACKET MOUNTED
- EXIT LIGHT (WALL)
- EXIT LIGHT (CEILING)
- FAAP — FIRE ALARM ANNUCIATOR PANEL
- FACP — FIRE ALARM CONTROL PANEL
- F — FIRE ALARM MANUAL PULL STATION
- V — FIRE ALARM VOICE EVACUATION WITH LIGHT
- V WP — FIRE ALARM VOICE EVACUATION SPEAKER, WEATHERPROOF
- F — FIRE ALARM LIGHT ONLY
- FIRE ALARM SMOKE DETECTOR
- FIRE ALARM HEAT DETECTOR
- FIRE ALARM SMOKE DETECTOR WITH SOUNDER BASE
- FIRE ALARM SMOKE DETECTOR WITH SOUNDER BASE AND LIGHT

NOTES:

1. BUILDING IS FULLY SPRINKLERED IN COMPLIANCE WITH NFPA 13
2. TYPICAL EXIT STAIR WIDTH: 42" (CAPACITY 240)
3. TYPICAL EXIT DOOR WIDTH: 34" (CAPACITY 226)
4. SEE LS001 FOR OCCUPANCY LOADS.

REGISTERED ARCHITECT
Jack Phillips Saunders
3449
Tupelo, MS
STATE OF MISSISSIPPI
04 March 2013

THE McCARTY COMPANY
DESIGN GROUP, P.A.
OFFICE ADDRESS:
533 WEST MAIN STREET
TUPELO, MS 38804
MAILING ADDRESS:
P.O. BOX 440
TUPELO, MS 38802
TELEPHONE:
(662) 844-4400
FAX:
(662) 844-0520

DESIGN ARCHITECT
Hanbury Evans Wright Vlattas + Company
120 Atlantic Street
Norfolk, VA 23510
757.321.9600
www.hewv.com

PROJECT TITLE
USM - CENTURY PARK SOUTH
IHL# 208-297
HATTIESBURG, MISSISSIPPI

THE UNIVERSITY OF SOUTHERN MISSISSIPPI

PROJECT NO:
- 2012020

DRAWN BY:
- JCF

CHECKED BY:
- JPH

DATE ISSUED:
- 04 MAR 2013

REVISIONS & ADDENDUMS

SHEET TITLE
BUILDING A - THIRD - FIFTH FLOOR LIFE SAFETY PLAN

SHEET NUMBER
LS103A

3/11/2013 4:58:17 AM

Plot Date: BID DOCUMENTS - 04 MARCH 2013

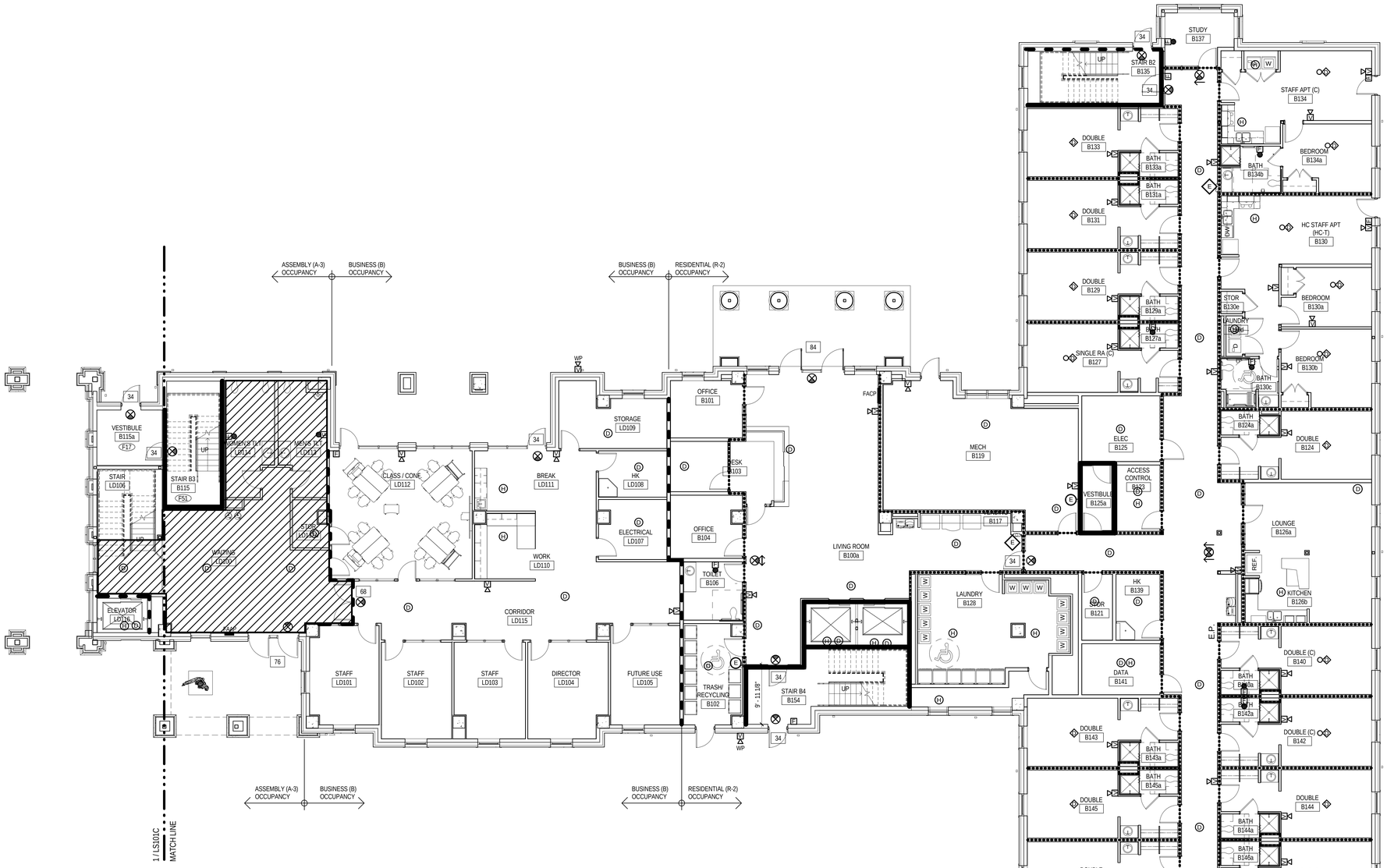

1 BUILDING B - FIRST FLOOR LIFE SAFETY PLAN

1/8" = 1'-0"

NORTH

RESIDENTIAL (R-2) OCCUPANCY
BUSINESS (B) OCCUPANCY
ASSEMBLY (A-3) OCCUPANCY

0' 8' 16' 24'

LIFE SAFETY LEGEND

- 1 HOUR FIRE RATED CEILING.
- 1/2 HOUR FIRE RATED PARTITION.
- 1 HOUR FIRE RATED PARTITION.
- 2 HOUR FIRE RATED PARTITION.
- 34 — EXIT WIDTH IN INCHES
- FIRE EXTINGUISHER CABINET
- FIRE EXTINGUISHER - BRACKET MOUNTED
- EXIT LIGHT (WALL)
- EXIT LIGHT (CEILING)
- FAAP — FIRE ALARM ANNUCIATOR PANEL
- FACP — FIRE ALARM CONTROL PANEL
- FIRE ALARM MANUAL PULL STATION
- FIRE ALARM VOICE EVACUATION WITH LIGHT
- WP — FIRE ALARM VOICE EVACUATION SPEAKER, WEATHERPROOF
- FIRE ALARM LIGHT ONLY
- FIRE ALARM SMOKE DETECTOR
- FIRE ALARM HEAT DETECTOR
- FIRE ALARM SMOKE DETECTOR WITH SOUNDER BASE
- FIRE ALARM SMOKE DETECTOR WITH SOUNDER BASE AND LIGHT

NOTES:

1. BUILDING IS FULLY SPRINKLERED IN COMPLIANCE WITH NFPA 13
2. TYPICAL EXIT STAIR WIDTH: 42" (CAPACITY 240)
3. TYPICAL EXIT DOOR WIDTH: 34" (CAPACITY 226)
4. SEE LS001 FOR OCCUPANCY LOADS.

REGISTERED ARCHITECT — Jeffrey Paul McCarty — 3487 — Tupelo, MS — STATE OF MISSISSIPPI — 04 March 2013

THE McCARTY COMPANY
DESIGN GROUP, P.A.

OFFICE ADDRESS:
533 WEST MAIN STREET
TUPELO, MS 38804

TELEPHONE:
(662) 844-4400
FAX:
(662) 844-0520

MAILING ADDRESS:
P.O. BOX 440
TUPELO, MS 38802

DESIGN ARCHITECT
Hanbury Evans Wright Vlattas + Company
120 Atlantic Street
Norfolk, VA 23510
757.321.9600
www.hewv.com

PROJECT TITLE

USM - CENTURY PARK SOUTH
IHL# 208-297
HATTIESBURG, MISSISSIPPI

THE UNIVERSITY OF SOUTHERN MISSISSIPPI

PROJECT NO: 2012020
DRAWN BY: JCF
CHECKED BY: JPH
DATE ISSUED: 04 MAR 2013

REVISIONS & ADDENDUMS

SHEET TITLE

BUILDING B - FIRST FLOOR LIFE SAFETY PLAN

SHEET NUMBER

LS101B

3/11/2013 5:41:53 AM

Plot Date: BID DOCUMENTS - 04 MAR 2013

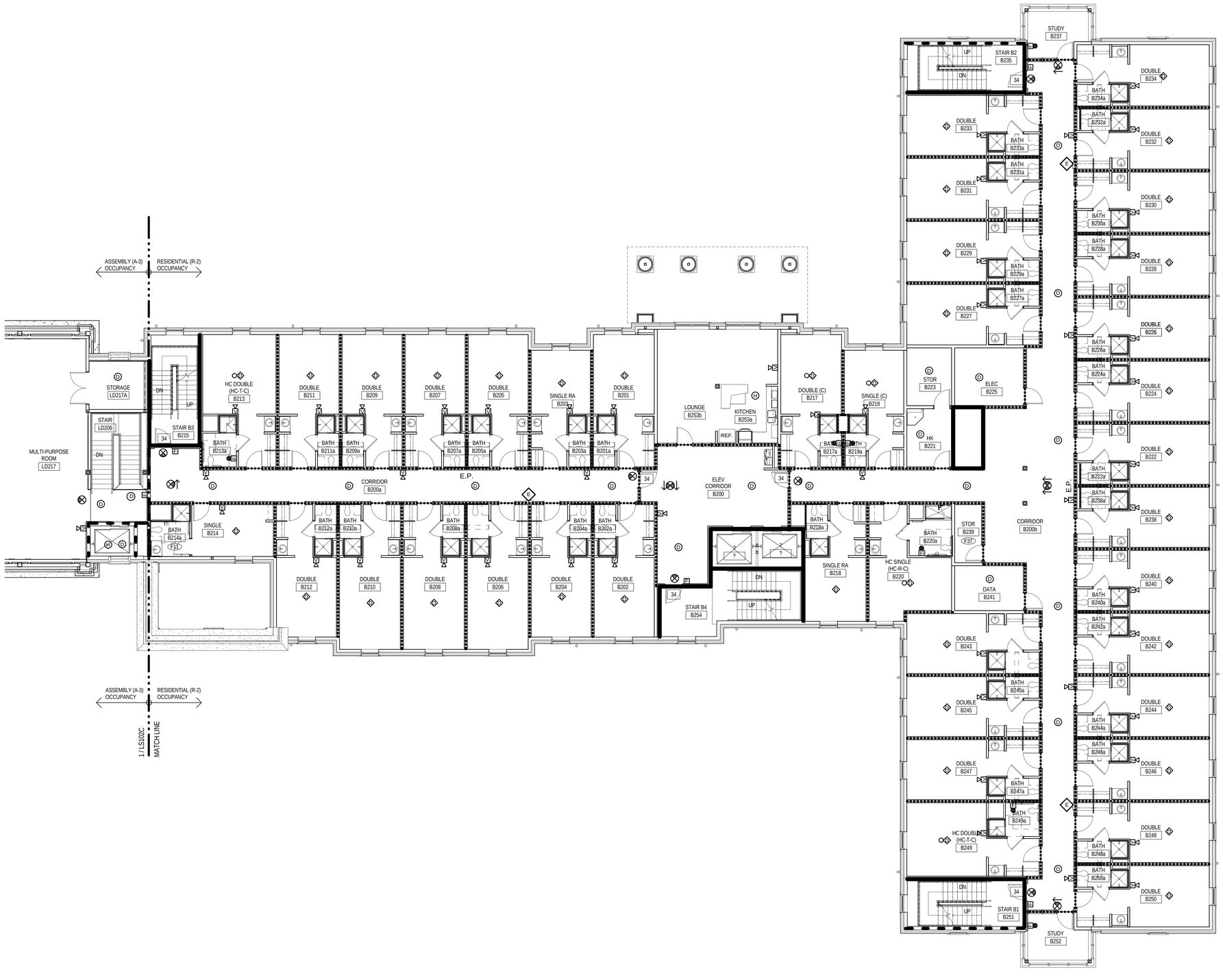

1 BUILDING B - SECOND FLOOR LIFE SAFETY PLAN

1/8" = 1'-0"

RESIDENTIAL (R-2) OCCUPANCY
ASSEMBLY (A-3) OCCUPANCY

NORTH

0' 8' 16' 24'

LIFE SAFETY LEGEND

	1 HOUR FIRE RATED CEILING.
	1/2 HOUR FIRE RATED PARTITION.
	1 HOUR FIRE RATED PARTITION.
	2 HOUR FIRE RATED PARTITION.
34	EXIT WIDTH IN INCHES
E	FIRE EXTINGUISHER CABINET
E	FIRE EXTINGUISHER - BRACKET MOUNTED
	EXIT LIGHT (WALL)
	EXIT LIGHT (CEILING)
FAAP	FIRE ALARM ANNUCIATOR PANEL
FACP	FIRE ALARM CONTROL PANEL
F	FIRE ALARM MANUAL PULL STATION
V	FIRE ALARM VOICE EVACUATION WITH LIGHT
V WP	FIRE ALARM VOICE EVACUATION SPEAKER, WEATHERPROOF
F	FIRE ALARM LIGHT ONLY
D	FIRE ALARM SMOKE DETECTOR
H	FIRE ALARM HEAT DETECTOR
D	FIRE ALARM SMOKE DETECTOR WITH SOUNDER BASE
D	FIRE ALARM SMOKE DETECTOR WITH SOUNDER BASE AND LIGHT

NOTES:

1. BUILDING IS FULLY SPRINKLERED IN COMPLIANCE WITH NFPA 13
2. TYPICAL EXIT STAIR WIDTH: 42" (CAPACITY 240)
3. TYPICAL EXIT DOOR WIDTH: 34" (CAPACITY 226)
4. SEE LS001 FOR OCCUPANCY LOADS.

REGISTERED ARCHITECT
Jason Paul Hanbury
3660
Tupelo, MS
STATE OF MISSISSIPPI
04 March 2013

THE McCARTY COMPANY
DESIGN GROUP, P.A.

TELEPHONE: (662) 844-4400
FAX: (662) 844-0520

OFFICE ADDRESS: 533 WEST MAIN STREET TUPELO, MS 38804

MAILING ADDRESS: P.O. BOX 440 TUPELO, MS 38802

DESIGN ARCHITECT
Hanbury Evans Wright Vlattas + Company
120 Atlantic Street
Norfolk, VA 23510
757.321.9600
www.hewv.com

PROJECT TITLE

USM - CENTURY PARK SOUTH
IHL# 208-297
HATTIESBURG, MISSISSIPPI

THE UNIVERSITY OF SOUTHERN MISSISSIPPI

PROJECT NO: 2012020
DRAWN BY: JCF
CHECKED BY: JPH
DATE ISSUED: 04 MAR 2013

REVISIONS & ADDENDUMS

SHEET TITLE

BUILDING B - SECOND FLOOR LIFE SAFETY PLAN

SHEET NUMBER

LS102B

3/11/2013 5:42:51 AM

Plot Date: BID DOCUMENTS - 04 MAR 2013

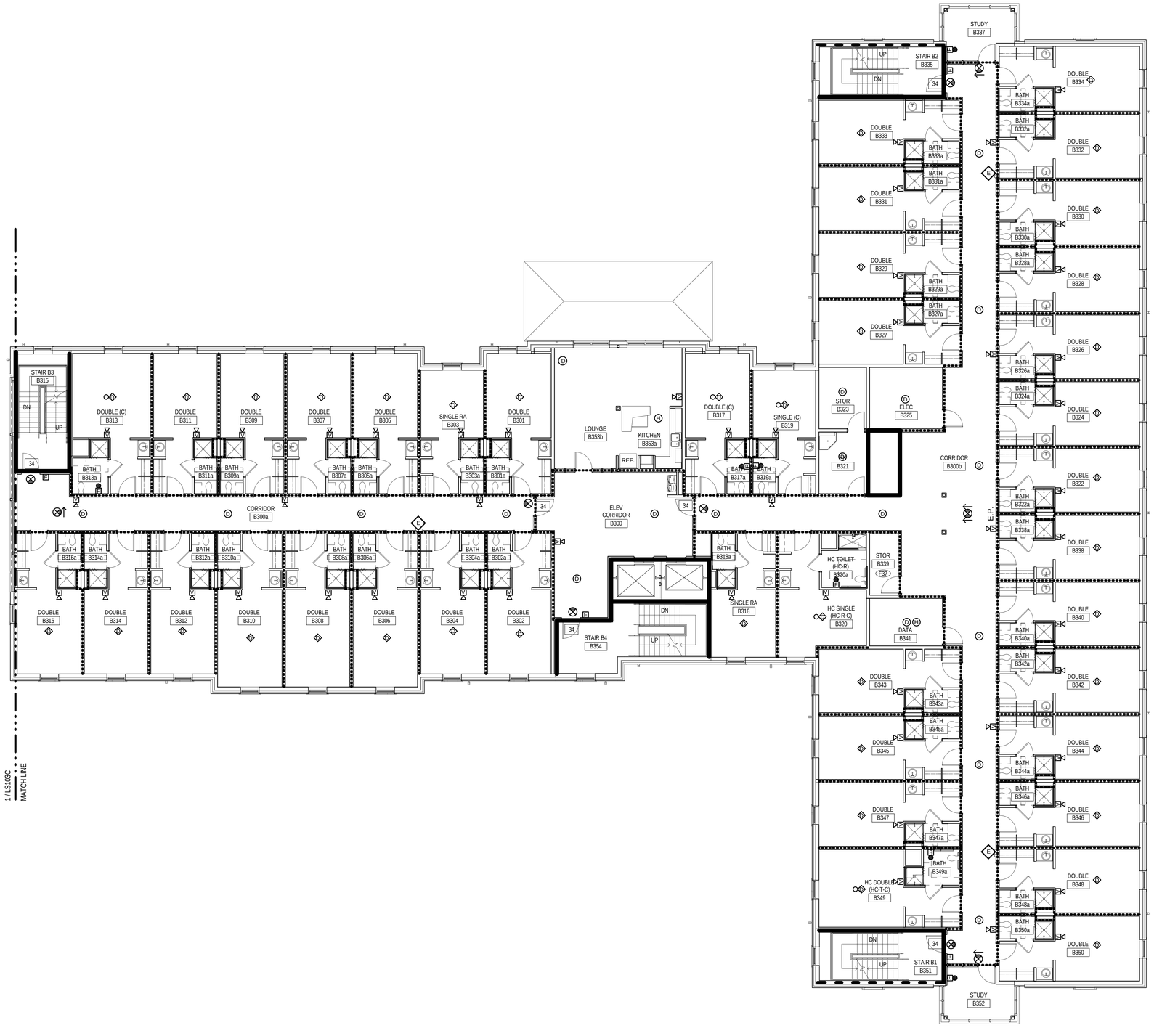

NORTH

1 — 1/8" = 1'-0"

BUILDING B - THIRD - FIFTH FLOOR LIFE SAFETY PLAN

RESIDENTIAL (R-2) OCCUPANCY

0' 8' 16' 24'

LIFE SAFETY LEGEND

	1 HOUR FIRE RATED CEILING.
	1/2 HOUR FIRE RATED PARTITION.
	1 HOUR FIRE RATED PARTITION.
	2 HOUR FIRE RATED PARTITION.
34	EXIT WIDTH IN INCHES
E	FIRE EXTINGUISHER CABINET
E	FIRE EXTINGUISHER - BRACKET MOUNTED
	EXIT LIGHT (WALL)
	EXIT LIGHT (CEILING)
FAAP	FIRE ALARM ANNUCIATOR PANEL
FACP	FIRE ALARM CONTROL PANEL
F	FIRE ALARM MANUAL PULL STATION
V	FIRE ALARM VOICE EVACUATION WITH LIGHT
V WP	FIRE ALARM VOICE EVACUATION SPEAKER, WEATHERPROOF
F	FIRE ALARM LIGHT ONLY
	FIRE ALARM SMOKE DETECTOR
	FIRE ALARM HEAT DETECTOR
	FIRE ALARM SMOKE DETECTOR WITH SOUNDER BASE
	FIRE ALARM SMOKE DETECTOR WITH SOUNDER BASE AND LIGHT

NOTES:

1. BUILDING IS FULLY SPRINKLERED IN COMPLIANCE WITH NFPA 13
2. TYPICAL EXIT STAIR WIDTH: 42" (CAPACITY 240)
3. TYPICAL EXIT DOOR WIDTH: 34" (CAPACITY 226)
4. SEE LS001 FOR OCCUPANCY LOADS.

REGISTERED ARCHITECT
Thomas Jefferson Saunders
3487
Tupelo, MS
STATE OF MISSISSIPPI
04 MARCH 2013

THE McCARTY COMPANY
DESIGN GROUP, P.A.
MAILING ADDRESS: P.O. BOX 440 TUPELO, MS 38802
OFFICE ADDRESS: 533 WEST MAIN STREET TUPELO, MS 38804
TELEPHONE: (662) 844-4400
FAX: (662) 844-0520

DESIGN ARCHITECT
Hanbury Evans Wright Vlattas + Company
120 Atlantic Street
Norfolk, VA 23510
757.321.9600
www.hewv.com

PROJECT TITLE
USM - CENTURY PARK SOUTH
IHL# 208-297
HATTIESBURG, MISSISSIPPI

THE UNIVERSITY OF SOUTHERN MISSISSIPPI

PROJECT NO: 2012020
DRAWN BY: JCF
CHECKED BY: JPH
DATE ISSUED: 04 MAR 2013

REVISIONS & ADDENDUMS

SHEET TITLE
BUILDING B - THIRD - FIFTH FLOOR LIFE SAFETY PLAN

SHEET NUMBER
LS103B

3/11/2013 5:43:38 AM

Plot Date: BID DOCUMENTS - 04 MAR 2013

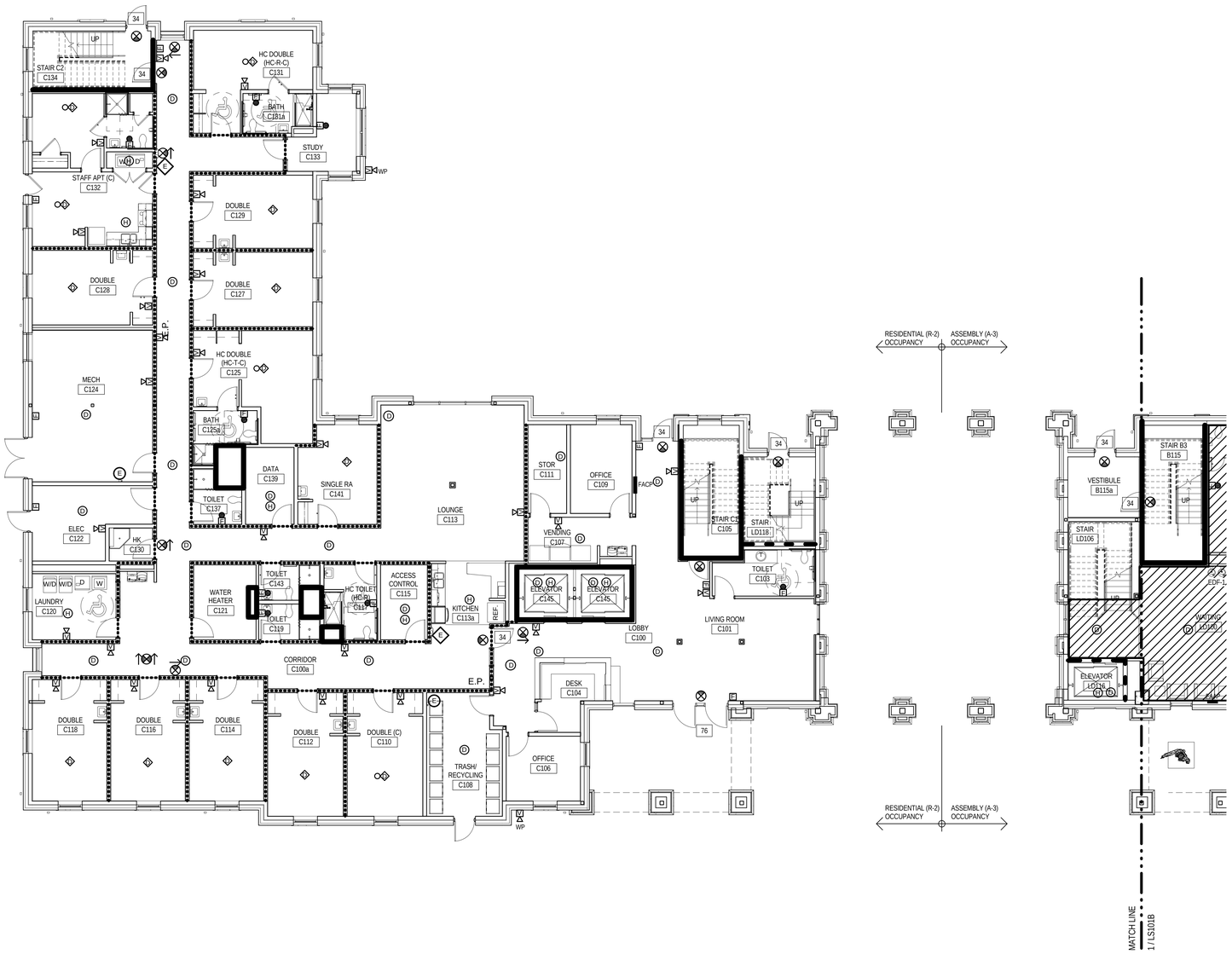

1 BUILDING C - FIRST FLOOR LIFE SAFETY PLAN

1/8" = 1'-0"

NORTH

ASSEMBLY (A-3) OCCUPANCY
RESIDENTIAL (R-2) OCCUPANCY

0' 8' 16' 24'

LIFE SAFETY LEGEND

	1 HOUR FIRE RATED CEILING.
	1/2 HOUR FIRE RATED PARTITION.
	1 HOUR FIRE RATED PARTITION.
	2 HOUR FIRE RATED PARTITION.
34	EXIT WIDTH IN INCHES
E	FIRE EXTINGUISHER CABINET
E	FIRE EXTINGUISHER - BRACKET MOUNTED
	EXIT LIGHT (WALL)
	EXIT LIGHT (CEILING)
FAAP	FIRE ALARM ANNUCIATOR PANEL
FACP	FIRE ALARM CONTROL PANEL
F	FIRE ALARM MANUAL PULL STATION
V	FIRE ALARM VOICE EVACUATION WITH LIGHT
V WP	FIRE ALARM VOICE EVACUATION SPEAKER, WEATHERPROOF
F	FIRE ALARM LIGHT ONLY
S	FIRE ALARM SMOKE DETECTOR
H	FIRE ALARM HEAT DETECTOR
S	FIRE ALARM SMOKE DETECTOR WITH SOUNDER BASE
S	FIRE ALARM SMOKE DETECTOR WITH SOUNDER BASE AND LIGHT

NOTES:

1. BUILDING IS FULLY SPRINKLERED IN COMPLIANCE WITH NFPA 13
2. TYPICAL EXIT STAIR WIDTH: 42" (CAPACITY 240)
3. TYPICAL EXIT DOOR WIDTH: 34" (CAPACITY 226)
4. SEE LS001 FOR OCCUPANCY LOADS.

REGISTERED ARCHITECT
Jeffrey Paul Saunders
3487
Tupelo, MS
STATE OF MISSISSIPPI
04 MARCH 2013

THE McCARTY COMPANY
DESIGN GROUP, P.A.
OFFICE ADDRESS:
533 WEST MAIN STREET
TUPELO, MS 38804
TELEPHONE:
(662) 844-4400
FAX:
(662) 844-0520
MAILING ADDRESS:
P.O. BOX 440
TUPELO, MS 38802

DESIGN ARCHITECT
Hanbury Evans Wright Vlattas + Company
120 Atlantic Street
Norfolk, VA 23510
757.321.9600
www.hewv.com

PROJECT TITLE
USM - CENTURY PARK SOUTH
IHL# 208-297
HATTIESBURG, MISSISSIPPI

THE UNIVERSITY OF SOUTHERN MISSISSIPPI

PROJECT NO:
- 2012020

DRAWN BY:
- JCF

CHECKED BY:
- JPH

DATE ISSUED:
- 04 MAR 2013

REVISIONS & ADDENDUMS

SHEET TITLE
BUILDING C - FIRST FLOOR LIFE SAFETY PLAN

SHEET NUMBER
LS101C

3/11/2013 5:42:13 AM

Plot Date: BID DOCUMENTS - 04 MAR 2013

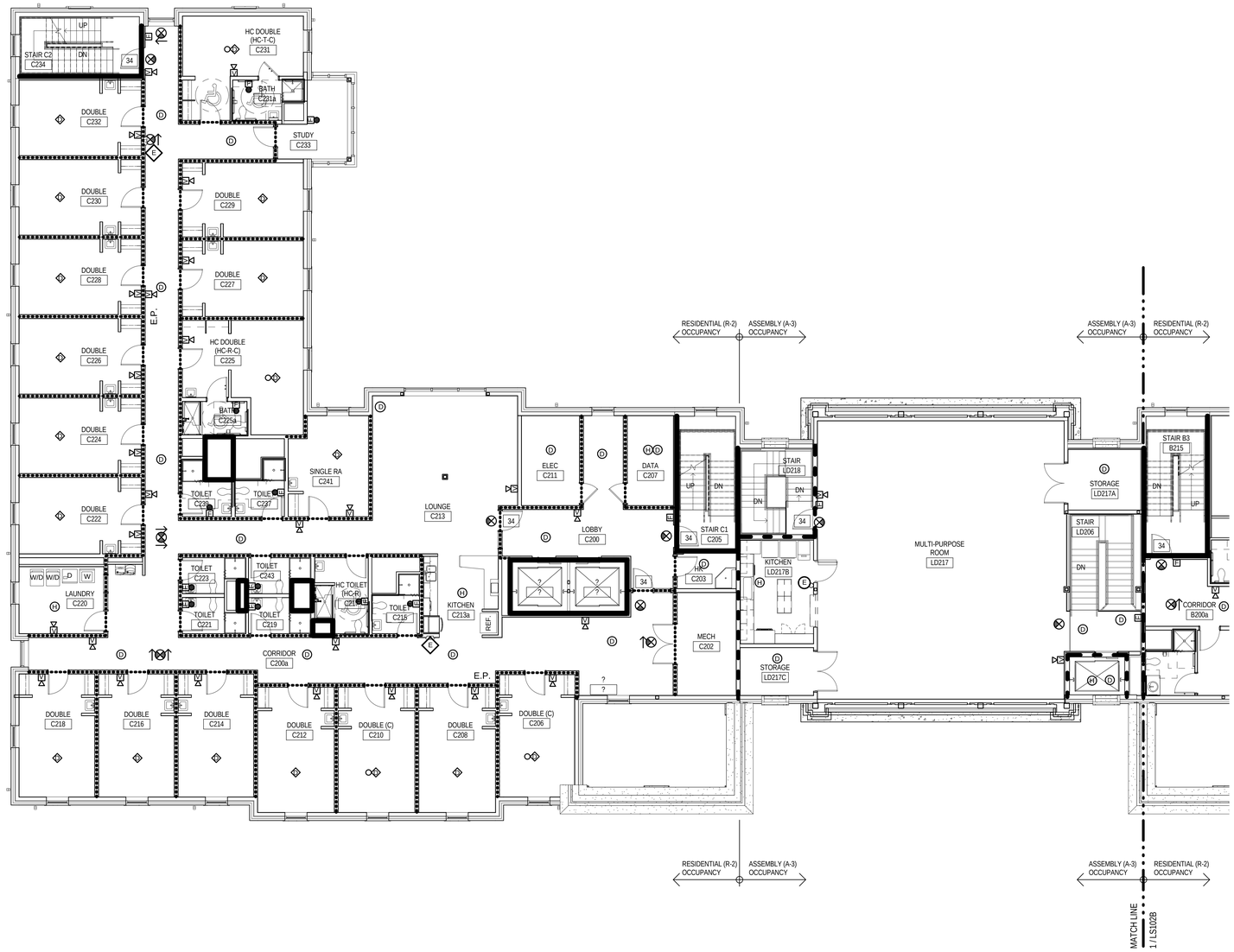

1
1/8" = 1'-0"
NORTH

BUILDING C - SECOND FLOOR LIFE SAFETY PLAN

RESIDENTIAL (R-2) OCCUPANCY
ASSEMBLY (A-3) OCCUPANCY

0' 8' 16' 24'

LIFE SAFETY LEGEND

- 1 HOUR FIRE RATED CEILING.
- 1/2 HOUR FIRE RATED PARTITION.
- 1 HOUR FIRE RATED PARTITION.
- 2 HOUR FIRE RATED PARTITION.
- 34 — EXIT WIDTH IN INCHES
- FIRE EXTINGUISHER CABINET
- FIRE EXTINGUISHER - BRACKET MOUNTED
- EXIT LIGHT (WALL)
- EXIT LIGHT (CEILING)
- FAAP — FIRE ALARM ANNUCIATOR PANEL
- FACP — FIRE ALARM CONTROL PANEL
- F — FIRE ALARM MANUAL PULL STATION
- V — FIRE ALARM VOICE EVACUATION WITH LIGHT
- V WP — FIRE ALARM VOICE EVACUATION SPEAKER, WEATHERPROOF
- F — FIRE ALARM LIGHT ONLY
- FIRE ALARM SMOKE DETECTOR
- FIRE ALARM HEAT DETECTOR
- FIRE ALARM SMOKE DETECTOR WITH SOUNDER BASE
- FIRE ALARM SMOKE DETECTOR WITH SOUNDER BASE AND LIGHT

NOTES:

1. BUILDING IS FULLY SPRINKLERED IN COMPLIANCE WITH NFPA 13
2. TYPICAL EXIT STAIR WIDTH: 42" (CAPACITY 240)
3. TYPICAL EXIT DOOR WIDTH: 34" (CAPACITY 226)
4. SEE LS001 FOR OCCUPANCY LOADS.

REGISTERED ARCHITECT
Jeffrey Paul Hanburg
3487
Tupelo, MS
STATE OF MISSISSIPPI
04 MARCH 2013

THE McCARTY COMPANY
DESIGN GROUP, P.A.
TELEPHONE: (662) 844-4400
FAX: (662) 844-0520
OFFICE ADDRESS: 533 WEST MAIN STREET TUPELO, MS 38804
MAILING ADDRESS: P.O. BOX 440 TUPELO, MS 38802

DESIGN ARCHITECT
Hanbury Evans Wright Vlattas + Company
120 Atlantic Street
Norfolk, VA 23510
757.321.9600
www.hewv.com

PROJECT TITLE
USM - CENTURY PARK SOUTH
IHL# 208-297
HATTIESBURG, MISSISSIPPI

THE UNIVERSITY OF SOUTHERN MISSISSIPPI

PROJECT NO: 2012020
DRAWN BY: JCF
CHECKED BY: JPH
DATE ISSUED: 04 MAR 2013

REVISIONS & ADDENDUMS

SHEET TITLE
BUILDING C - SECOND FLOOR LIFE SAFETY PLAN

SHEET NUMBER
LS102C

3/11/2013 5:43:09 AM

Plot Date: BID DOCUMENTS - 04 MAR 2013

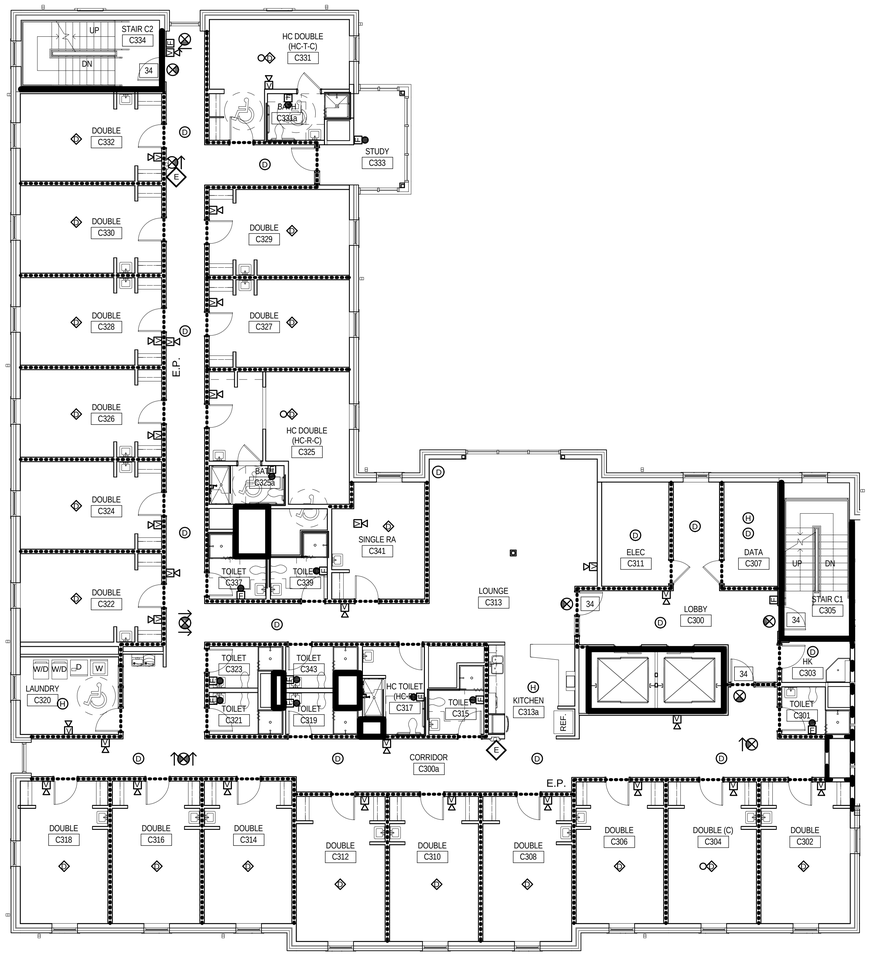

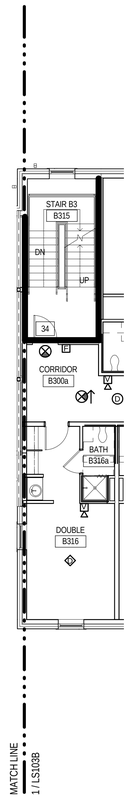

1 1/8" = 1'-0"

NORTH

BUILDING C - THIRD - FIFTH FLOOR LIFE SAFETY PLAN

RESIDENTIAL (R-2) OCCUPANCY

0' 8' 16' 24'

LIFE SAFETY LEGEND

	1 HOUR FIRE RATED CEILING.
	1/2 HOUR FIRE RATED PARTITION.
	1 HOUR FIRE RATED PARTITION.
	2 HOUR FIRE RATED PARTITION.
34	EXIT WIDTH IN INCHES
E	FIRE EXTINGUISHER CABINET
E	FIRE EXTINGUISHER - BRACKET MOUNTED
	EXIT LIGHT (WALL)
	EXIT LIGHT (CEILING)
FAAP	FIRE ALARM ANNUCIATOR PANEL
FACP	FIRE ALARM CONTROL PANEL
F	FIRE ALARM MANUAL PULL STATION
V	FIRE ALARM VOICE EVACUATION WITH LIGHT
V WP	FIRE ALARM VOICE EVACUATION SPEAKER, WEATHERPROOF
F	FIRE ALARM LIGHT ONLY
	FIRE ALARM SMOKE DETECTOR
	FIRE ALARM HEAT DETECTOR
	FIRE ALARM SMOKE DETECTOR WITH SOUNDER BASE
	FIRE ALARM SMOKE DETECTOR WITH SOUNDER BASE AND LIGHT

NOTES:

1. BUILDING IS FULLY SPRINKLERED IN COMPLIANCE WITH NFPA 13
2. TYPICAL EXIT STAIR WIDTH: 42" (CAPACITY 240)
3. TYPICAL EXIT DOOR WIDTH: 34" (CAPACITY 226)
4. SEE LS001 FOR OCCUPANCY LOADS.

REGISTERED ARCHITECT
Jeffrey Paul Saunders
3487
Tupelo, MS
STATE OF MISSISSIPPI
04 March 2013

THE McCARTY COMPANY
DESIGN GROUP, P.A.
OFFICE ADDRESS:
533 WEST MAIN STREET
TUPELO, MS 38804
TELEPHONE:
(662) 844-4400
FAX:
(662) 844-0520
MAILING ADDRESS:
P.O. BOX 440
TUPELO, MS 38802

DESIGN ARCHITECT
Hanbury Evans Wright Vlattas + Company
120 Atlantic Street
Norfolk, VA 23510
757.321.9600
www.hewv.com

PROJECT TITLE
USM - CENTURY PARK SOUTH
IHL# 208-297
HATTIESBURG, MISSISSIPPI

THE UNIVERSITY OF SOUTHERN MISSISSIPPI

PROJECT NO: 2012020
DRAWN BY: JCF
CHECKED BY: JPH
DATE ISSUED: 04 MAR 2013

REVISIONS & ADDENDUMS

SHEET TITLE
BUILDING C - THIRD - FIFTH FLOOR LIFE SAFETY PLAN

SHEET NUMBER
LS103C

3/11/2013 5:43:56 AM

Plot Date: BID DOCUMENTS - 04 MAR 2013

BUILDINGS A, B & C - RESIDENTIAL DOOR SCHEDULE - APARTMENTS AND SLEEPING UNITS

	DOOR										FRAME						
MARK	TYPE	WIDTH	HEIGHT	THICKNESS	MATERIAL	FINISH	UNDERCUT	FIRE RATING	HAS CLOSER	HARDWARE	TYPE	MATERIAL	FINISH	HEAD	JAMB	SILL	DOOR NOTES
A	ID1	3' - 0"	7' - 0"	0' - 1 3/4"	WOOD	STAIN		20 MIN	YES	53.0	IF1	HM	PAINT	29/A005	15/A005	4/A005	1,9
B	ID1	3' - 0"	7' - 0"	0' - 1 3/4"	WOOD	STAIN				56.0	IF1	HM	PAINT	29/A005	15/A005	5/A005	
C	ID1	3' - 0"	7' - 0"	0' - 1 3/4"	WOOD	STAIN				58.0	IF1	HM	PAINT	29/A005	15/A005	4/A005	4
D	ID1	3' - 0"	7' - 0"	0' - 1 3/4"	WOOD	STAIN				59.0	IF1	HM	PAINT	29/A005	15/A005	*	
E	ID1	4' - 0"	7' - 0"	0' - 1 3/4"	WOOD	STAIN				54.0	IF2	HM	PAINT	29/A005	15/A005	*	2
F	ID1	5' - 0"	7' - 0"	0' - 1 3/4"	WOOD	STAIN				55.0	IF2	HM	PAINT	29/A005	15/A005	5/A005	2
G	ID1	2' - 4"	7' - 0"	0' - 1 3/4"	WOOD	STAIN				57.0	IF1	HM	PAINT	29/A005	15/A005	*	
I	ID1	6' - 0"	7' - 0"	0' - 1 3/4"	WOOD	STAIN				55.0	IF2	HM	PAINT	29/A005	15/A005	5/A005	
J	ID1	3' - 0"	7' - 0"	0' - 1 3/4"	WOOD	STAIN				56.0	IF1	HM	PAINT	29/A005	15/A005	3/A005	

BUILDING A - RESIDENTIAL DOOR SCHEDULE

	DOOR										FRAME						
MARK	TYPE	WIDTH	HEIGHT	THICKNESS	MATERIAL	FINISH	UNDERCUT	FIRE RATING	HAS CLOSER	HARDWARE	TYPE	MATERIAL	FINISH	HEAD	JAMB	SILL	DOOR NOTES
A100e	ID4	3' - 0"	7' - 0"	0' - 1 3/4"	WOOD	STAIN			YES	18.0	IF5	HM	PAINT	29/A005	19/A005	4/A005	6,8
A102a	ID1	3' - 0"	7' - 0"	0' - 1 3/4"	WOOD	STAIN			YES	21.0	IF1	HM	PAINT	29/A005	15/A005	*	
A103	ID1	3' - 0"	7' - 0"	0' - 1 3/4"	WOOD	STAIN		20 MIN	YES	26.0	IF1	HM	PAINT	29/A005	15/A005	*	
A104a	ID1	3' - 0"	7' - 0"	0' - 1 3/4"	WOOD	STAIN		20 MIN	YES	21.0	IF1	HM	PAINT	29/A005	15/A005	6/A005	
A106	ID1	3' - 0"	7' - 0"	0' - 1 3/4"	WOOD	STAIN		20 MIN		34.0	IF3	HM	PAINT	29/A005	18/A005	*	
A106a	ID5	3' - 0"	7' - 0"	0' - 1 3/4"	HM	PAINT				38.0	IF1	HM	PAINT	29/A005	15/A005	8/A005	7
A108	ID1	3' - 0"	7' - 0"	0' - 1 3/4"	WOOD	STAIN		20 MIN		32.0	IF5	HM	PAINT	29/A005	15/A005	4/A005	
A117	ID1	3' - 0"	7' - 0"	0' - 1 3/4"	WOOD	STAIN		20 MIN	YES	27.0	IF8	HM	PAINT	29/A005	20/A005	4/A005	
A124a	ID1	3' - 4"	7' - 8"	0' - 1 3/4"	WOOD	STAIN			YES	28.0	IF1	HM	PAINT	29/A005	15/A005	*	
A125	ID1	3' - 4"	7' - 8"	0' - 1 3/4"	WOOD	STAIN		20 MIN	YES	21.0	IF1	HM	PAINT	29/A005	15/A005	6/A005	
A126	ID1	3' - 0"	7' - 0"	0' - 1 3/4"	WOOD	STAIN		20 MIN	YES	21.0	IF1	HM	PAINT	29/A005	15/A005	6/A005	
A127	ID1	3' - 0"	7' - 0"	0' - 1 3/4"	WOOD	STAIN		20 MIN	YES	21.0	IF1	HM	PAINT	29/A005	15/A005	6/A005	
A128	ID1	3' - 0"	7' - 0"	0' - 1 3/4"	WOOD	STAIN		20 MIN	YES	24.0	IF1	HM	PAINT	29/A005	15/A005	4/A005	
A129	ID1	3' - 0"	7' - 0"	0' - 1 3/4"	WOOD	STAIN		20 MIN	YES	24.0	IF3	HM	PAINT	29/A005	15/A005	4/A005	
A130A	ID1	3' - 0"	7' - 0"	0' - 1 3/4"	WOOD	STAIN		20 MIN		38.0	IF1	HM	PAINT	29/A005	15/A005	4/A005	
A130B	ID1	3' - 0"	7' - 0"	0' - 1 3/4"	WOOD	STAIN		20 MIN	YES	24.0	IF1	HM	PAINT	29/A005	15/A005	*	
A200b	ID4	3' - 0"	7' - 0"	0' - 1 3/4"	WOOD	STAIN			YES	18.0	IF5	HM	PAINT	29/A005	16/A005	4/A005	6,8
A200d	ID4	3' - 0"	7' - 0"	0' - 1 3/4"	WOOD	STAIN			YES	18.0	IF5	HM	PAINT	29/A005	17/A005	4/A005	6,8
A203	ID3	3' - 0"	7' - 8"	0' - 1 3/4"	WOOD	STAIN		20 MIN		32.0	IF9	HM	PAINT	30/A005	18/A005	*	8
A217	ID1	3' - 0"	7' - 0"	0' - 1 3/4"	WOOD	STAIN		20 MIN	YES	27.0	IF8	HM	PAINT	29/A005	20/A005	4/A005	
A222	ID1	3' - 0"	7' - 0"	0' - 1 3/4"	WOOD	STAIN		20 MIN	YES	21.0	IF8	HM	PAINT	29/A005	15/A005	2/A005	
A224	ID1	3' - 0"	7' - 0"	0' - 1 3/4"	WOOD	STAIN		20 MIN	YES	22.0	IF1	HM	PAINT	29/A005	15/A005	2/A005	
A226	ID1	3' - 0"	7' - 0"	0' - 1 3/4"	WOOD	STAIN		20 MIN	YES	22.0	IF1	HM	PAINT	29/A005	15/A005	2/A005	
A228	ID1	3' - 0"	7' - 0"	0' - 1 3/4"	WOOD	STAIN		20 MIN	YES	22.0	IF1	HM	PAINT	29/A005	15/A005	2/A005	
A242	ID1	3' - 0"	7' - 0"	0' - 1 3/4"	WOOD	STAIN		20 MIN	YES	21.0	IF1	HM	PAINT	29/A005	15/A005	2/A005	
A244	ID1	3' - 0"	7' - 0"	0' - 1 3/4"	WOOD	STAIN		20 MIN	YES	22.0	IF1	HM	PAINT	29/A005	15/A005	2/A005	
A246	ID1	3' - 0"	7' - 0"	0' - 1 3/4"	WOOD	STAIN		20 MIN	YES	22.0	IF1	HM	PAINT	29/A005	15/A005	2/A005	
A252	ID1	3' - 0"	7' - 0"	0' - 1 3/4"	WOOD	STAIN		20 MIN	YES	21.0	IF8	HM	PAINT	29/A005	15/A005	2/A005	
A254	ID3	3' - 0"	7' - 8"	0' - 1 3/4"	WOOD	STAIN		20 MIN		32.0	IF9	HM	PAINT	30/A005	18/A005	*	8
A273	ID1	3' - 0"	7' - 0"	0' - 1 3/4"	WOOD	STAIN		20 MIN	YES	27.0	IF8	HM	PAINT	29/A005	20/A005	4/A005	
A300b	ID4	3' - 0"	7' - 0"	0' - 1 3/4"	WOOD	STAIN			YES	19.0	IF5	HM	PAINT	29/A005	16/A005	4/A005	6
A300d	ID4	3' - 0"	7' - 0"	0' - 1 3/4"	WOOD	STAIN			YES	19.0	IF5	HM	PAINT	29/A005	17/A005	4/A005	6
A317	ID1	3' - 0"	7' - 0"	0' - 1 3/4"	WOOD	STAIN		20 MIN	YES	27.0	IF8	HM	PAINT	29/A005	20/A005	4/A005	
A322	ID3	3' - 0"	7' - 8"	0' - 1 3/4"	WOOD	STAIN		20 MIN		32.0	IF9	HM	PAINT	30/A005	18/A005	5/A005	
A324	ID1	3' - 0"	7' - 0"	0' - 1 3/4"	WOOD	STAIN		20 MIN	YES	22.0	IF1	HM	PAINT	29/A005	15/A005	2/A005	
A326	ID1	3' - 0"	7' - 0"	0' - 1 3/4"	WOOD	STAIN		20 MIN	YES	22.0	IF1	HM	PAINT	29/A005	15/A005	2/A005	
A328	ID1	3' - 0"	7' - 0"	0' - 1 3/4"	WOOD	STAIN		20 MIN	YES	21.0	IF1	HM	PAINT	29/A005	15/A005	2/A005	
A342	ID1	3' - 0"	7' - 0"	0' - 1 3/4"	WOOD	STAIN		20 MIN	YES	21.0	IF1	HM	PAINT	29/A005	15/A005	2/A005	
A344	ID1	3' - 0"	7' - 0"	0' - 1 3/4"	WOOD	STAIN		20 MIN	YES	22.0	IF1	HM	PAINT	29/A005	15/A005	2/A005	
A346	ID1	3' - 0"	7' - 0"	0' - 1 3/4"	WOOD	STAIN		20 MIN	YES	22.0	IF1	HM	PAINT	29/A005	15/A005	2/A005	
A352	ID3	3' - 0"	7' - 8"	0' - 1 3/4"	WOOD	STAIN		20 MIN		32.0	IF9	HM	PAINT	30/A005	18/A005	4/A005	
A373	ID1	3' - 0"	7' - 0"	0' - 1 3/4"	WOOD	STAIN		20 MIN	YES	27.0	IF8	HM	PAINT	29/A005	20/A005	4/A005	
A400b	ID4	3' - 0"	7' - 0"	0' - 1 3/4"	WOOD	STAIN			YES	19.0	IF5	HM	PAINT	29/A005	16/A005	4/A005	6
A400d	ID4	3' - 0"	7' - 0"	0' - 1 3/4"	WOOD	STAIN			YES	19.0	IF5	HM	PAINT	29/A005	17/A005	4/A005	6
A417	ID1	3' - 0"	7' - 0"	0' - 1 3/4"	WOOD	STAIN		20 MIN	YES	27.0	IF8	HM	PAINT	29/A005	20/A005	4/A005	
A422	ID3	3' - 0"	7' - 8"	0' - 1 3/4"	WOOD	STAIN		20 MIN		32.0	IF9	HM	PAINT	30/A005	18/A005	5/A005	
A424	ID1	3' - 0"	7' - 0"	0' - 1 3/4"	WOOD	STAIN		20 MIN	YES	22.0	IF1	HM	PAINT	29/A005	15/A005	2/A005	
A426	ID1	3' - 0"	7' - 0"	0' - 1 3/4"	WOOD	STAIN		20 MIN	YES	22.0	IF1	HM	PAINT	29/A005	15/A005	2/A005	
A428	ID1	3' - 0"	7' - 0"	0' - 1 3/4"	WOOD	STAIN		20 MIN	YES	21.0	IF1	HM	PAINT	29/A005	15/A005	2/A005	
A442	ID1	3' - 0"	7' - 0"	0' - 1 3/4"	WOOD	STAIN		20 MIN	YES	21.0	IF1	HM	PAINT	29/A005	15/A005	2/A005	
A444	ID1	3' - 0"	7' - 0"	0' - 1 3/4"	WOOD	STAIN		20 MIN	YES	22.0	IF1	HM	PAINT	29/A005	15/A005	2/A005	
A446	ID1	3' - 0"	7' - 0"	0' - 1 3/4"	WOOD	STAIN		20 MIN	YES	21.0	IF1	HM	PAINT	29/A005	15/A005	2/A005	
A452	ID3	3' - 0"	7' - 8"	0' - 1 3/4"	WOOD	STAIN		20 MIN		32.0	IF9	HM	PAINT	30/A005	18/A005	4/A005	
A473	ID1	3' - 0"	7' - 0"	0' - 1 3/4"	WOOD	STAIN		20 MIN	YES	27.0	IF8	HM	PAINT	29/A005	20/A005	4/A005	
A500b	ID4	3' - 0"	7' - 0"	0' - 1 3/4"	WOOD	STAIN			YES	19.0	IF5	HM	PAINT	29/A005	16/A005	4/A005	6
A500d	ID4	3' - 0"	7' - 0"	0' - 1 3/4"	WOOD	STAIN			YES	19.0	IF5	HM	PAINT	29/A005	17/A005	4/A005	6
A517	ID1	3' - 0"	7' - 0"	0' - 1 3/4"	WOOD	STAIN		20 MIN	YES	27.0	IF8	HM	PAINT	29/A005	20/A005	4/A005	
A522	ID3	3' - 0"	7' - 8"	0' - 1 3/4"	WOOD	STAIN		20 MIN		32.0	IF9	HM	PAINT	30/A005	18/A005	5/A005	
A524	ID1	3' - 0"	7' - 0"	0' - 1 3/4"	WOOD	STAIN		20 MIN	YES	22.0	IF1	HM	PAINT	29/A005	15/A005	2/A005	
A526	ID1	3' - 0"	7' - 0"	0' - 1 3/4"	WOOD	STAIN		20 MIN	YES	22.0	IF1	HM	PAINT	29/A005	15/A005	2/A005	
A528	ID1	3' - 0"	7' - 0"	0' - 1 3/4"	WOOD	STAIN		20 MIN	YES	21.0	IF1	HM	PAINT	29/A005	15/A005	2/A005	
A542	ID1	3' - 0"	7' - 0"	0' - 1 3/4"	WOOD	STAIN		20 MIN	YES	21.0	IF1	HM	PAINT	29/A005	15/A005	2/A005	
A544	ID1	3' - 0"	7' - 0"	0' - 1 3/4"	WOOD	STAIN		20 MIN	YES	22.0	IF1	HM	PAINT	29/A005	15/A005	2/A005	
A546	ID1	3' - 0"	7' - 0"	0' - 1 3/4"	WOOD	STAIN		20 MIN	YES	22.0	IF1	HM	PAINT	29/A005	15/A005	2/A005	
A552	ID3	3' - 0"	7' - 8"	0' - 1 3/4"	WOOD	STAIN		20 MIN		32.0	IF9	HM	PAINT	30/A005	18/A005	4/A005	
A573	ID1	3' - 0"	7' - 0"	0' - 1 3/4"	WOOD	STAIN		20 MIN	YES	27.0	IF8	HM	PAINT	29/A005	20/A005	4/A005	

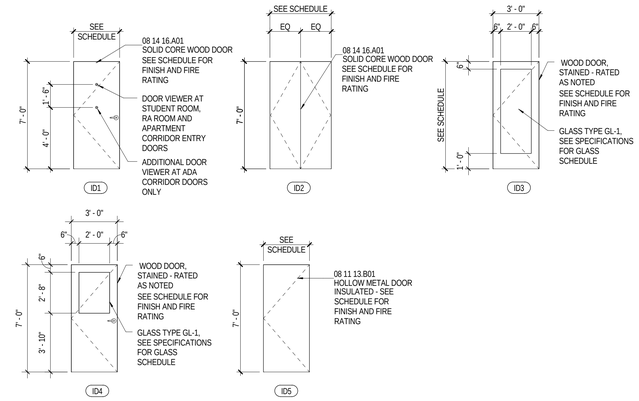

INTERIOR DOOR TYPES - RESIDENTIAL

1/4" = 1'-0"

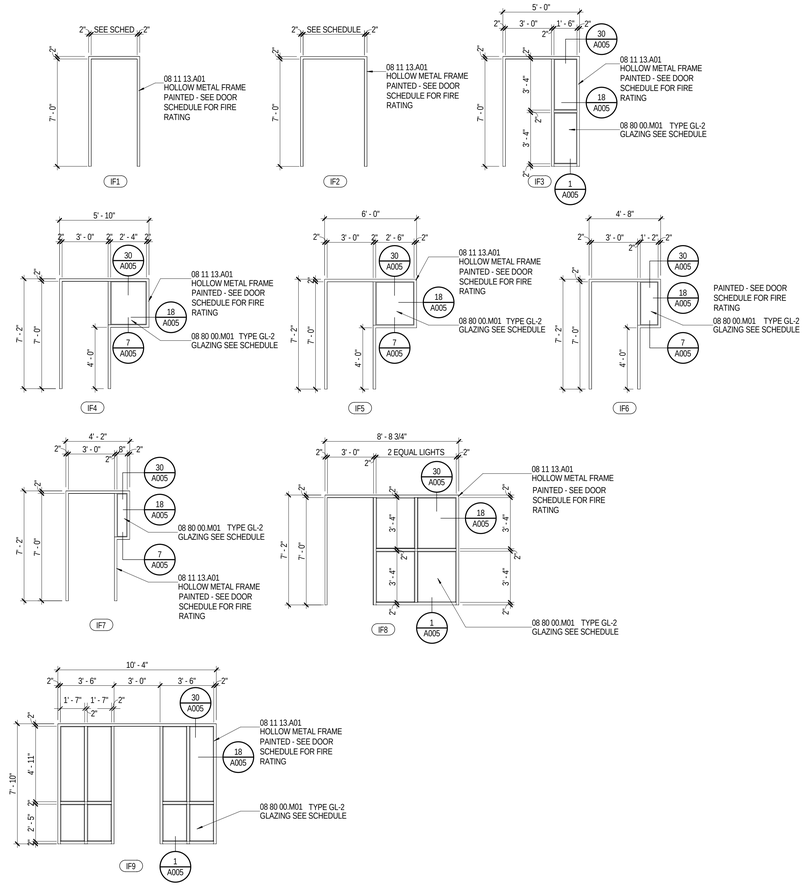

INTERIOR DOOR FRAME TYPES - RESIDENTIAL

1/4" = 1'-0"

MATERIAL KEYING

08 11 13.A01	HOLLOW METAL FRAME
08 11 13.B01	HOLLOW METAL DOOR
08 14 16.A01	SOLID CORE WOOD DOOR
08 80 00.M01	GLAZING SEE SCHEDULE

DOOR NOTES

1. TYPICAL STUDENT ROOM, RESIDENT ASSISTANT ROOM AND STAFF APARTMENT DOOR FROM CORRIDOR.
2. TYPICAL STAFF APARTMENT BEDROOM CLOSET DOOR.
3. TYPICAL CLOSET DOOR IN APARTMENT.
4. TYPICAL APARTMENT BEDROOM DOOR.
5. NOT USED
6. INSTALL CARD READER LOCKSET SYSTEM, COORDINATE WITH ELECTRICAL DRAWINGS.
7. INSULATED HOLLOW METAL ACCESS DOOR TO LAUNDRY EXHAUST PLENUM.
8. INSTALL DOOR OPERATOR WITH PUSH BUTTON CONTROLS ON BOTH SIDES OF DOOR, COORDINATE WITH ELECTRICAL DRAWINGS.
9. AT HC STUDENT ROOM DOORS FROM CORRIDOR ON 1ST AND 2ND FLOOR, PROVIDE DOOR OPERATOR AND PUSH BUTTON CONTROLS ON BOTH SIDES OF DOOR, COORDINATE WITH ELECTRICAL DRAWINGS.

DOORS AND WINDOWS - GENERAL NOTES

GENERAL NOTES BELOW PERTAIN TO ALL DOORS (A000 SERIES DRAWINGS)

- A INTERIOR DOOR FRAMES SHALL BE STANDARD WELDED HOLLOW METAL FRAMES UNLESS OTHERWISE NOTED.
- B ALL HOLLOW METAL DOOR FRAMES SHALL BE PAINTED.
- C PROVIDE SEALANT AT PERIMETER OF BOTH SIDES OF DOOR FRAMES.
- D ALL WOOD BLOCKING SHALL BE FIRE RETARDANT TREATED, TYPICAL.
- E REFER TO ENLARGED FLOOR PLANS OF STUDENT ROOMS, RESIDENT ASSISTANT ROOMS AND STAFF APARTMENTS FOR TYPICAL DOOR LOCATIONS.
- F SILL DETAILS INDICATED THUS "*" DENOTES "SAME FINISH THROUGH OPENING."
- G SEE DOOR SPECIFICATIONS FOR UNDERCUT CLEARANCE REQUIREMENTS.
- H SEE SHEET A004 FOR EXTERIOR DOORS, STAIR DOORS, HEALTH CLINIC DOORS AND LUCKYDAY DOORS.
- I SEE SHEET A005 FOR ALL RESIDENTIAL INTERIOR DOORS UNLESS OTHERWISE NOTED.
- J SEE ELECTRICAL DRAWINGS AND HARDWARE SCHEDULE FOR DOOR ACCESS CONTROL AND OPERATOR REQUIREMENTS.
- K CONTRACTOR TO CONFIRM EXACT EXTERIOR WINDOW AND DOOR OPENING SIZE, AS FRAME SIZES SHOWN ON WINDOW AND DOOR TYPE ELEVATIONS ARE NOMINAL AND DO NOT ACCOUNT FOR BLOCKING AND SHIMMING.

KEY PLAN

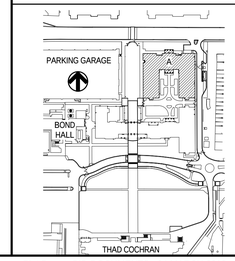

THE McCARTY COMPANY
DESIGN GROUP, P.A.
MAILING ADDRESS: P.O. BOX 440 TUPELO, MS 38802
OFFICE ADDRESS: 533 WEST MAIN STREET TUPELO, MS 38804
TELEPHONE: (662) 844-4400 FAX: (662) 844-0503

DESIGN ARCHITECT
Hanbury Evans Wright Vlattas + Company
120 Atlantic Street
Norfolk, VA 23510
757.321.9600
www.hewv.com

PROJECT TITLE
USM - CENTURY PARK SOUTH
IHL# 208-297
HATTIESBURG, MISSISSIPPI

THE UNIVERSITY OF SOUTHERN MISSISSIPPI

PROJECT NO: 2012020
DRAWN BY: SOM
CHECKED BY: JTG
DATE ISSUED: 04 MAR 2013

REVISIONS & ADDENDUMS

SHEET TITLE
BUILDING A - RESIDENTIAL DOOR SCHEDULE

SHEET NUMBER
A001

3/8/2013 2:53:27 PM

Plot Date: BID DOCUMENTS - 04 MARCH 2013

BUILDING B - RESIDENTIAL DOOR SCHEDULE

	DOOR										FRAME						
MARK	TYPE	WIDTH	HEIGHT	THICKNESS	MATERIAL	FINISH	UNDER CUT	FIRE RATING	HAS CLOSER	HARDWARE	TYPE	MATERIAL	FINISH	HEAD	JAMB	SILL	DOOR NOTES
B100a	ID4	3' - 0"	7' - 0"	0' - 1 3/4"	WOOD	STAIN			YES	18.0	IF4	HM	PAINT	29/A005	15/A005	4/A005	6,8
B101	ID1	3' - 0"	7' - 0"	0' - 1 3/4"	WOOD	STAIN		20 MIN		42.0	IF3	HM	PAINT	29/A005	18/A005	4/A005	
B102a	ID1	3' - 0"	7' - 0"	0' - 1 3/4"	WOOD	STAIN		20 MIN	YES	21.0	IF1	HM	PAINT	29/A005	15/A005	6/A005	
B103	ID3	3' - 0"	7' - 0"	0' - 1 3/4"	WOOD	STAIN			YES	24.0	IF7	HM	PAINT	29/A005	16/A005	4/A005	
B104	ID1	3' - 0"	7' - 0"	0' - 1 3/4"	WOOD	STAIN		20 MIN	YES	24.0	IF1	HM	PAINT	29/A005	15/A005	4/A005	
B105	ID1	3' - 0"	7' - 0"	0' - 1 3/4"	WOOD	STAIN		20 MIN		38.0	IF1	HM	PAINT	29/A005	15/A005	*	
B106	ID1	3' - 0"	7' - 0"	0' - 1 3/4"	WOOD	STAIN		20 MIN	YES	26.0	IF1	HM	PAINT	29/A005	15/A005	*	
B119a	ID1	3' - 0"	7' - 0"	0' - 1 3/4"	WOOD	STAIN		20 MIN	YES	21.0	IF1	HM	PAINT	29/A005	15/A005	2/A005	
B123	ID1	3' - 0"	7' - 0"	0' - 1 3/4"	WOOD	STAIN		20 MIN	YES	21.0	IF1	HM	PAINT	29/A005	15/A005	2/A005	
B125a	ID1	3' - 4"	7' - 8"	0' - 1 3/4"	WOOD	STAIN		20 MIN	YES	21.0	IF1	HM	PAINT	29/A005	15/A005	2/A005	
B125b	ID1	3' - 0"	7' - 0"	0' - 1 3/4"	WOOD	STAIN			YES	21.0	IF1	HM	PAINT	32/A005	22/A005	*	
B125c	ID1	3' - 0"	7' - 0"	0' - 1 3/4"	WOOD	STAIN		20 MIN	YES	21.0	IF1	HM	PAINT	32/A005	22/A005	2/A005	
B126	ID3	3' - 0"	7' - 8"	0' - 1 3/4"	WOOD	STAIN		20 MIN		32.0	IF9	HM	PAINT	31/A005	17/A005	*	8
B128a	ID4	3' - 0"	7' - 0"	0' - 1 3/4"	WOOD	STAIN		20 MIN		34.0	IF3	HM	PAINT	29/A005	15/A005	*	8
B128b	ID5	3' - 0"	7' - 0"	0' - 1 3/4"	HM	PAINT				38.0	IF1	HM	PAINT	29/A005	15/A005		7
B130	ID1	3' - 0"	7' - 0"	0' - 1 3/4"	WOOD	STAIN		20 MIN		38.0	IF1	HM	PAINT	29/A005	15/A005	2/A005	
B137	ID1	3' - 0"	7' - 0"	0' - 1 3/4"	WOOD	STAIN		20 MIN	YES	27.0	IF8	HM	PAINT	29/A005	19/A005	4/A005	
B139	ID1	3' - 0"	7' - 0"	0' - 1 3/4"	WOOD	STAIN		20 MIN	YES	21.0	IF1	HM	PAINT	29/A005	15/A005	2/A005	
B141	ID1	3' - 0"	7' - 0"	0' - 1 3/4"	WOOD	STAIN		20 MIN	YES	21.0	IF1	HM	PAINT	29/A005	15/A005	2/A005	
B152	ID1	3' - 0"	7' - 0"	0' - 1 3/4"	WOOD	STAIN		20 MIN	YES	27.0	IF8	HM	PAINT	29/A005	19/A005	4/A005	
B200a	ID4	3' - 0"	7' - 0"	0' - 1 3/4"	WOOD	STAIN			YES	18.0	IF4	HM	PAINT	29/A005	15/A005	4/A005	6,8
B200b	ID4	3' - 0"	7' - 0"	0' - 1 3/4"	WOOD	STAIN			YES	18.0	IF4	HM	PAINT	29/A005	15/A005	4/A005	6,8
B221	ID1	3' - 0"	7' - 0"	0' - 1 3/4"	WOOD	STAIN		20 MIN	YES	21.0	IF1	HM	PAINT	29/A005	15/A005	2/A005	
B223	ID1	3' - 0"	7' - 0"	0' - 1 3/4"	WOOD	STAIN			YES	21.0	IF1	HM	PAINT	29/A005	15/A005	*	
B225	ID1	3' - 0"	7' - 0"	0' - 1 3/4"	WOOD	STAIN		20 MIN	YES	22.0	IF1	HM	PAINT	29/A005	15/A005	2/A005	
B237	ID1	3' - 0"	7' - 0"	0' - 1 3/4"	WOOD	STAIN		20 MIN	YES	27.0	IF8	HM	PAINT	29/A005	19/A005	4/A005	
B239	ID1	3' - 0"	7' - 0"	0' - 1 3/4"	WOOD	STAIN		20 MIN	YES	22.0	IF1	HM	PAINT	29/A005	15/A005	2/A005	
B241	ID1	3' - 0"	7' - 0"	0' - 1 3/4"	WOOD	STAIN		20 MIN	YES	21.0	IF1	HM	PAINT	29/A005	15/A005	2/A005	
B252	ID1	3' - 0"	7' - 0"	0' - 1 3/4"	WOOD	STAIN		20 MIN	YES	27.0	IF8	HM	PAINT	29/A005	19/A005	4/A005	
B253	ID3	3' - 0"	7' - 8"	0' - 1 3/4"	WOOD	STAIN		20 MIN		32.0	IF9	HM	PAINT	31/A005	18/A005	4/A005	8
B300a	ID4	3' - 0"	7' - 0"	0' - 1 3/4"	WOOD	STAIN			YES	18.0	IF4	HM	PAINT	29/A005	15/A005	4/A005	6
B300b	ID4	3' - 0"	7' - 0"	0' - 1 3/4"	WOOD	STAIN			YES	18.0	IF4	HM	PAINT	29/A005	15/A005	4/A005	6
B321	ID1	3' - 0"	7' - 0"	0' - 1 3/4"	WOOD	STAIN		20 MIN	YES	21.0	IF1	HM	PAINT	29/A005	15/A005	2/A005	
B323	ID1	3' - 0"	7' - 0"	0' - 1 3/4"	WOOD	STAIN			YES	21.0	IF1	HM	PAINT	29/A005	15/A005	*	
B325	ID1	3' - 0"	7' - 0"	0' - 1 3/4"	WOOD	STAIN		20 MIN	YES	22.0	IF1	HM	PAINT	29/A005	15/A005	2/A005	
B337	ID1	3' - 0"	7' - 0"	0' - 1 3/4"	WOOD	STAIN		20 MIN	YES	27.0	IF8	HM	PAINT	29/A005	19/A005	4/A005	
B339	ID1	3' - 0"	7' - 0"	0' - 1 3/4"	WOOD	STAIN		20 MIN	YES	22.0	IF1	HM	PAINT	29/A005	15/A005	2/A005	
B341	ID1	3' - 0"	7' - 0"	0' - 1 3/4"	WOOD	STAIN		20 MIN	YES	21.0	IF1	HM	PAINT	29/A005	15/A005	2/A005	
B352	ID1	3' - 0"	7' - 0"	0' - 1 3/4"	WOOD	STAIN		20 MIN	YES	27.0	IF8	HM	PAINT	29/A005	19/A005	4/A005	
B353	ID3	3' - 0"	7' - 8"	0' - 1 3/4"	WOOD	STAIN		20 MIN		32.0	IF9	HM	PAINT	31/A005	18/A005	4/A005	
B400a	ID4	3' - 0"	7' - 0"	0' - 1 3/4"	WOOD	STAIN			YES	18.0	IF4	HM	PAINT	29/A005	15/A005	4/A005	6
B400b	ID4	3' - 0"	7' - 0"	0' - 1 3/4"	WOOD	STAIN			YES	18.0	IF4	HM	PAINT	29/A005	15/A005	4/A005	6
B421	ID1	3' - 0"	7' - 0"	0' - 1 3/4"	WOOD	STAIN		20 MIN	YES	21.0	IF1	HM	PAINT	29/A005	15/A005	2/A005	
B423	ID1	3' - 0"	7' - 0"	0' - 1 3/4"	WOOD	STAIN			YES	21.0	IF1	HM	PAINT	29/A005	15/A005	*	
B425	ID1	3' - 0"	7' - 0"	0' - 1 3/4"	WOOD	STAIN		20 MIN	YES	22.0	IF1	HM	PAINT	29/A005	15/A005	2/A005	
B437	ID1	3' - 0"	7' - 0"	0' - 1 3/4"	WOOD	STAIN		20 MIN	YES	27.0	IF8	HM	PAINT	29/A005	19/A005	4/A005	
B439	ID1	3' - 0"	7' - 0"	0' - 1 3/4"	WOOD	STAIN		20 MIN	YES	22.0	IF1	HM	PAINT	29/A005	15/A005	2/A005	
B441	ID1	3' - 0"	7' - 0"	0' - 1 3/4"	WOOD	STAIN		20 MIN	YES	21.0	IF1	HM	PAINT	29/A005	15/A005	2/A005	
B452	ID1	3' - 0"	7' - 0"	0' - 1 3/4"	WOOD	STAIN		20 MIN	YES	27.0	IF8	HM	PAINT	29/A005	19/A005	4/A005	
B453	ID3	3' - 0"	7' - 8"	0' - 1 3/4"	WOOD	STAIN		20 MIN		32.0	IF9	HM	PAINT	31/A005	18/A005	4/A005	
B500a	ID4	3' - 0"	7' - 0"	0' - 1 3/4"	WOOD	STAIN			YES	18.0	IF4	HM	PAINT	29/A005	15/A005	4/A005	6
B500b	ID4	3' - 0"	7' - 0"	0' - 1 3/4"	WOOD	STAIN			YES	18.0	IF4	HM	PAINT	29/A005	15/A005	4/A005	6
B521	ID1	3' - 0"	7' - 0"	0' - 1 3/4"	WOOD	STAIN		20 MIN	YES	21.0	IF1	HM	PAINT	29/A005	15/A005	2/A005	
B523	ID1	3' - 0"	7' - 0"	0' - 1 3/4"	WOOD	STAIN			YES	21.0	IF1	HM	PAINT	29/A005	15/A005	*	
B525	ID1	3' - 0"	7' - 0"	0' - 1 3/4"	WOOD	STAIN		20 MIN	YES	22.0	IF1	HM	PAINT	29/A005	15/A005	2/A005	
B537	ID1	3' - 0"	7' - 0"	0' - 1 3/4"	WOOD	STAIN		20 MIN	YES	27.0	IF8	HM	PAINT	29/A005	19/A005	4/A005	
B539	ID1	3' - 0"	7' - 0"	0' - 1 3/4"	WOOD	STAIN		20 MIN	YES	22.0	IF1	HM	PAINT	29/A005	15/A005	2/A005	
B541	ID1	3' - 0"	7' - 0"	0' - 1 3/4"	WOOD	STAIN		20 MIN	YES	21.0	IF1	HM	PAINT	29/A005	15/A005	2/A005	
B552	ID1	3' - 0"	7' - 0"	0' - 1 3/4"	WOOD	STAIN		20 MIN	YES	27.0	IF8	HM	PAINT	29/A005	19/A005	4/A005	
B553	ID3	3' - 0"	7' - 8"	0' - 1 3/4"	WOOD	STAIN		20 MIN		32.0	IF9	HM	PAINT	31/A005	18/A005	4/A005	

DOOR NOTES

1. TYPICAL STUDENT ROOM, RESIDENT ASSISTANT ROOM AND STAFF APARTMENT DOOR FROM CORRIDOR.
2. TYPICAL STAFF APARTMENT BEDROOM CLOSET DOOR.
3. TYPICAL CLOSET DOOR IN APARTMENT.
4. TYPICAL APARTMENT BEDROOM DOOR.
5. NOT USED
6. INSTALL CARD READER LOCKSET SYSTEM, COORDINATE WITH ELECTRICAL DRAWINGS.
7. INSULATED METAL ACCESS DOOR TO LAUNDRY EXHAUST PLENUM. PROVIDE WEATHERSTRIPPING AT FRAME.
8. INSTALL DOOR OPERATOR WITH PUSH BUTTON CONTROLS ON BOTH SIDES OF DOOR. COORDINATE WITH ELECTRICAL DRAWINGS.
9. AT HC STUDENT ROOM DOORS FROM CORRIDOR ON 1ST AND 2ND FLOOR. PROVIDE DOOR OPERATOR AND PUSH BUTTON CONTROLS ON BOTH SIDES OF DOOR, COORDINATE WITH ELECTRICAL DRAWINGS.

DOORS AND WINDOWS - GENERAL NOTES

GENERAL NOTES BELOW PERTAIN TO ALL DOORS (A000 SERIES DRAWINGS)

A INTERIOR DOOR FRAMES SHALL BE STANDARD WELDED HOLLOW METAL FRAMES UNLESS OTHERWISE NOTED.

B ALL HOLLOW METAL DOOR FRAMES SHALL BE PAINTED.

C PROVIDE SEALANT AT PERIMETER OF BOTH SIDES OF DOOR FRAMES.

D ALL WOOD BLOCKING SHALL BE FIRE RETARDANT TREATED, TYPICAL.

E REFER TO ENLARGED FLOOR PLANS OF STUDENT ROOMS, RESIDENT ASSISTANT ROOMS AND STAFF APARTMENTS FOR TYPICAL DOOR LOCATIONS.

F SILL DETAILS INDICATED THUS "*" DENOTES "SAME FINISH THROUGH OPENING."

G SEE DOOR SPECIFICATIONS FOR UNDERCUT CLEARANCE REQUIREMENTS.

H SEE SHEET A004 FOR EXTERIOR DOORS, STAIR DOORS, HEALTH CLINIC DOORS AND LUCKYDAY DOORS.

I SEE SHEET A005 FOR ALL RESIDENTIAL INTERIOR DOORS UNLESS OTHERWISE NOTED.

J SEE ELECTRICAL DRAWINGS AND HARDWARE SCHEDULE FOR DOOR ACCESS CONTROL AND OPERATOR REQUIREMENTS.

K CONTRACTOR TO CONFIRM EXACT EXTERIOR WINDOW AND DOOR OPENING SIZE. AS FRAME SIZES SHOWN ON WINDOW AND DOOR TYPE ELEVATIONS ARE NOMINAL AND DO NOT ACCOUNT FOR BLOCKING AND SHIMMING.

KEY PLAN

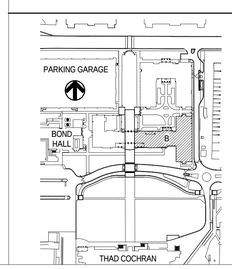

THE McCARTY COMPANY DESIGN GROUP, P.A.
MAILING ADDRESS: P.O. BOX 440 TUPELO, MS 38802
OFFICE ADDRESS: 533 WEST MAIN STREET TUPELO, MS 38804
TELEPHONE: (662) 844-4400
FAX: (662) 844-0500

DESIGN ARCHITECT
Hanbury Evans Wright Vlattas + Company
120 Atlantic Street
Norfolk, VA 23510
757.321.9600
www.hewv.com

PROJECT TITLE
USM - CENTURY PARK SOUTH
IHL# 208-297
HATTIESBURG, MS

THE UNIVERSITY OF SOUTHERN MISSISSIPPI

PROJECT NO: 2012020
DRAWN BY: SOM
CHECKED BY: JTG
DATE ISSUED: 04 MAR 2013

REVISIONS & ADDENDUMS

SHEET TITLE
BUILDING B - RESIDENTIAL DOOR SCHEDULE

SHEET NUMBER
A002

Plot Date: BID DOCUMENTS - 04 MARCH 2013

3/8/2013 2:44:22 PM

BUILDING C - RESIDENTIAL DOOR SCHEDULE

	DOOR										FRAME						
MARK	TYPE	WIDTH	HEIGHT	THICKNESS	MATERIAL	FINISH	UNDER CUT	FIRE RATING	HAS CLOSER	HARDWARE	TYPE	MATERIAL	FINISH	HEAD	JAMB	SILL	DOOR NOTES
C100a	ID4	3' - 0"	7' - 0"	0' - 1 3/4"	WOOD	STAIN		20 MIN	YES	18.0	IF5	HM	PAINT	29/A005	18/A005	4/A005	6,8
C103	ID1	3' - 0"	7' - 0"	0' - 1 3/4"	WOOD	STAIN		20 MIN	YES	26.0	IF1	HM	PAINT	29/A005	15/A005	*	
C104	ID6	3' - 0"	7' - 0"	0' - 1 3/4"	WOOD	STAIN			YES	24.0	IF6	HM	PAINT	29/A005	16/A005	4/A005	6
C106a	ID1	3' - 0"	7' - 0"	0' - 1 3/4"	WOOD	STAIN		20 MIN	YES	24.0	IF1	HM	PAINT	29/A005	15/A005	4/A005	
C108	ID1	3' - 0"	7' - 0"	0' - 1 3/4"	WOOD	STAIN		20 MIN	YES	21.0	IF1	HM	PAINT	29/A005	15/A005	2/A005	
C109	ID1	3' - 0"	7' - 0"	0' - 1 3/4"	WOOD	STAIN		20 MIN	YES	24.0	IF1	HM	PAINT	29/A005	15/A005	4/A005	
C111	ID1	3' - 0"	7' - 0"	0' - 1 3/4"	WOOD	STAIN		20 MIN	YES	21.0	IF1	HM	PAINT	29/A005	15/A005	2/A005	
C115	ID1	3' - 0"	7' - 0"	0' - 1 3/4"	WOOD	STAIN		20 MIN	YES	21.0	IF1	HM	PAINT	29/A005	15/A005	2/A005	1,9
C117	ID1	3' - 0"	7' - 0"	0' - 1 3/4"	WOOD	STAIN		20 MIN	YES	26.0	IF1	HM	PAINT	29/A005	15/A005	3/A005	1,9
C119	ID1	3' - 0"	7' - 0"	0' - 1 3/4"	WOOD	STAIN		20 MIN	YES	26.0	IF1	HM	PAINT	29/A005	15/A005	3/A005	
C120	ID1	3' - 0"	7' - 0"	0' - 1 3/4"	WOOD	STAIN		20 MIN	YES	27.0	IF8	HM	PAINT	29/A005	19/A005	4/A005	
C121	ID1	3' - 0"	7' - 0"	0' - 1 3/4"	WOOD	STAIN		20 MIN	YES	21.0	IF1	HM	PAINT	29/A005	15/A005	2/A005	
C122a	ID1	3' - 4"	7' - 8"	0' - 1 3/4"	WOOD	STAIN		20 MIN	YES	21.0	IF1	HM	PAINT	29/A005	15/A005	2/A005	
C124a	ID1	3' - 0"	7' - 0"	0' - 1 3/4"	WOOD	STAIN		20 MIN	YES	21.0	IF1	HM	PAINT	29/A005	15/A005	2/A005	
C130	ID1	3' - 0"	7' - 0"	0' - 1 3/4"	WOOD	STAIN		20 MIN	YES	21.0	IF1	HM	PAINT	29/A005	15/A005	2/A005	
C133	ID1	3' - 0"	7' - 0"	0' - 1 3/4"	WOOD	STAIN		20 MIN	YES	27.0	IF3	HM	PAINT	29/A005	15/A005	*	
C137	ID1	3' - 0"	7' - 0"	0' - 1 3/4"	WOOD	STAIN		20 MIN	YES	26.0	IF1	HM	PAINT	29/A005	15/A005	3/A005	
C139	ID1	3' - 0"	7' - 0"	0' - 1 3/4"	WOOD	STAIN		20 MIN	YES	21.0	IF1	HM	PAINT	29/A005	15/A005	2/A005	
C143	ID1	3' - 0"	7' - 0"	0' - 1 3/4"	WOOD	STAIN		20 MIN	YES	26.0	IF1	HM	PAINT	29/A005	15/A005	3/A005	
C200a	ID4	3' - 0"	7' - 0"	0' - 1 3/4"	WOOD	STAIN			YES	18.0	IF5	HM	PAINT	29/A005	20/A005	4/A005	6,8
C202	ID1	6' - 0"	7' - 0"	0' - 1 3/4"	WOOD	STAIN		20 MIN	YES	15.0	IF2	HM	PAINT	29/A005	15/A005	2/A005	
C203	ID1	3' - 0"	7' - 0"	0' - 1 3/4"	WOOD	STAIN		20 MIN	YES	21.0	IF1	HM	PAINT	29/A005	15/A005	2/A005	
C207	ID1	3' - 0"	7' - 0"	0' - 1 3/4"	WOOD	STAIN		20 MIN	YES	22.0	IF1	HM	PAINT	29/A005	15/A005	2/A005	
C211	ID1	3' - 0"	7' - 0"	0' - 1 3/4"	WOOD	STAIN		20 MIN	YES	22.0	IF1	HM	PAINT	29/A005	15/A005	2/A005	
C213	ID4	3' - 0"	7' - 0"	0' - 1 3/4"	WOOD	STAIN		20 MIN	YES	18.0	IF5	HM	PAINT	29/A005	17/A005	4/A005	6,8
C215	ID1	3' - 0"	7' - 0"	0' - 1 3/4"	WOOD	STAIN		20 MIN	YES	26.0	IF1	HM	PAINT	29/A005	15/A005	3/A005	
C217	ID1	3' - 0"	7' - 0"	0' - 1 3/4"	WOOD	STAIN		20 MIN	YES	26.0	IF1	HM	PAINT	29/A005	15/A005	3/A005	
C219	ID1	3' - 0"	7' - 0"	0' - 1 3/4"	WOOD	STAIN		20 MIN	YES	26.0	IF1	HM	PAINT	29/A005	15/A005	3/A005	
C220	ID1	3' - 0"	7' - 0"	0' - 1 3/4"	WOOD	STAIN		20 MIN	YES	27.0	IF8	HM	PAINT	29/A005	19/A005	4/A005	
C221	ID1	3' - 0"	7' - 0"	0' - 1 3/4"	WOOD	STAIN		20 MIN	YES	26.0	IF1	HM	PAINT	29/A005	15/A005	3/A005	
C223	ID1	3' - 0"	7' - 0"	0' - 1 3/4"	WOOD	STAIN		20 MIN	YES	26.0	IF1	HM	PAINT	29/A005	15/A005	3/A005	
C233	ID1	3' - 0"	7' - 0"	0' - 1 3/4"	WOOD	STAIN		20 MIN	YES	27.0	IF3	HM	PAINT	29/A005	19/A005	*	
C237	ID1	3' - 0"	7' - 0"	0' - 1 3/4"	WOOD	STAIN		20 MIN	YES	26.0	IF1	HM	PAINT	29/A005	15/A005	3/A005	
C239	ID1	3' - 0"	7' - 0"	0' - 1 3/4"	WOOD	STAIN		20 MIN	YES	26.0	IF1	HM	PAINT	29/A005	15/A005	3/A005	
C243	ID1	3' - 0"	7' - 0"	0' - 1 3/4"	WOOD	STAIN		20 MIN	YES	26.0	IF1	HM	PAINT	29/A005	15/A005	3/A005	
C300a	ID4	3' - 0"	7' - 0"	0' - 1 3/4"	WOOD	STAIN			YES	19.0	IF5	HM	PAINT	29/A005	20/A005	4/A005	6
C301	ID1	3' - 0"	7' - 0"	0' - 1 3/4"	WOOD	STAIN		20 MIN	YES	26.0	IF1	HM	PAINT	29/A005	15/A005	3/A005	
C303	ID1	3' - 0"	7' - 0"	0' - 1 3/4"	WOOD	STAIN		20 MIN	YES	21.0	IF1	HM	PAINT	29/A005	15/A005	2/A005	
C307	ID1	3' - 0"	7' - 0"	0' - 1 3/4"	WOOD	STAIN		20 MIN	YES	22.0	IF1	HM	PAINT	29/A005	15/A005	2/A005	
C311	ID1	3' - 0"	7' - 0"	0' - 1 3/4"	WOOD	STAIN		20 MIN	YES	22.0	IF1	HM	PAINT	29/A005	15/A005	2/A005	
C313	ID4	3' - 0"	7' - 0"	0' - 1 3/4"	WOOD	STAIN		20 MIN	YES	19.0	IF5	HM	PAINT	29/A005	17/A005	4/A005	6
C315	ID1	3' - 0"	7' - 0"	0' - 1 3/4"	WOOD	STAIN		20 MIN	YES	26.0	IF1	HM	PAINT	29/A005	15/A005	3/A005	
C317	ID1	3' - 0"	7' - 0"	0' - 1 3/4"	WOOD	STAIN		20 MIN	YES	26.0	IF1	HM	PAINT	29/A005	15/A005	3/A005	
C319	ID1	3' - 0"	7' - 0"	0' - 1 3/4"	WOOD	STAIN		20 MIN	YES	26.0	IF1	HM	PAINT	29/A005	15/A005	3/A005	
C320	ID1	3' - 0"	7' - 0"	0' - 1 3/4"	WOOD	STAIN		20 MIN	YES	27.0	IF8	HM	PAINT	29/A005	19/A005	4/A005	
C321	ID1	3' - 0"	7' - 0"	0' - 1 3/4"	WOOD	STAIN		20 MIN	YES	26.0	IF1	HM	PAINT	29/A005	15/A005	3/A005	
C323	ID1	3' - 0"	7' - 0"	0' - 1 3/4"	WOOD	STAIN		20 MIN	YES	26.0	IF1	HM	PAINT	29/A005	15/A005	3/A005	
C333	ID1	3' - 0"	7' - 0"	0' - 1 3/4"	WOOD	STAIN		20 MIN	YES	27.0	IF3	HM	PAINT	29/A005	15/A005	*	
C337	ID1	3' - 0"	7' - 0"	0' - 1 3/4"	WOOD	STAIN		20 MIN	YES	26.0	IF1	HM	PAINT	29/A005	15/A005	3/A005	
C339	ID1	3' - 0"	7' - 0"	0' - 1 3/4"	WOOD	STAIN		20 MIN	YES	26.0	IF1	HM	PAINT	29/A005	15/A005	3/A005	
C343	ID1	3' - 0"	7' - 0"	0' - 1 3/4"	WOOD	STAIN		20 MIN	YES	26.0	IF1	HM	PAINT	29/A005	15/A005	3/A005	
C400a	ID4	3' - 0"	7' - 0"	0' - 1 3/4"	WOOD	STAIN			YES	19.0	IF5	HM	PAINT	29/A005	19/A005	4/A005	6
C401	ID1	3' - 0"	7' - 0"	0' - 1 3/4"	WOOD	STAIN		20 MIN	YES	26.0	IF1	HM	PAINT	29/A005	15/A005	3/A005	
C403	ID1	3' - 0"	7' - 0"	0' - 1 3/4"	WOOD	STAIN		20 MIN	YES	21.0	IF1	HM	PAINT	29/A005	15/A005	2/A005	
C407	ID1	3' - 0"	7' - 0"	0' - 1 3/4"	WOOD	STAIN		20 MIN	YES	22.0	IF1	HM	PAINT	29/A005	15/A005	2/A005	
C411	ID1	3' - 0"	7' - 0"	0' - 1 3/4"	WOOD	STAIN		20 MIN	YES	22.0	IF1	HM	PAINT	29/A005	15/A005	2/A005	
C413	ID4	3' - 0"	7' - 0"	0' - 1 3/4"	WOOD	STAIN		20 MIN	YES	19.0	IF5	HM	PAINT	29/A005	17/A005	4/A005	6
C415	ID1	3' - 0"	7' - 0"	0' - 1 3/4"	WOOD	STAIN		20 MIN	YES	26.0	IF1	HM	PAINT	29/A005	15/A005	3/A005	
C417	ID1	3' - 0"	7' - 0"	0' - 1 3/4"	WOOD	STAIN		20 MIN	YES	26.0	IF1	HM	PAINT	29/A005	15/A005	3/A005	
C419	ID1	3' - 0"	7' - 0"	0' - 1 3/4"	WOOD	STAIN		20 MIN	YES	26.0	IF1	HM	PAINT	29/A005	15/A005	3/A005	
C420	ID1	3' - 0"	7' - 0"	0' - 1 3/4"	WOOD	STAIN		20 MIN	YES	27.0	IF8	HM	PAINT	29/A005	19/A005	4/A005	
C421	ID1	3' - 0"	7' - 0"	0' - 1 3/4"	WOOD	STAIN		20 MIN	YES	26.0	IF1	HM	PAINT	29/A005	15/A005	3/A005	
C423	ID1	3' - 0"	7' - 0"	0' - 1 3/4"	WOOD	STAIN		20 MIN	YES	26.0	IF1	HM	PAINT	29/A005	15/A005	3/A005	
C433	ID1	3' - 0"	7' - 0"	0' - 1 3/4"	WOOD	STAIN		20 MIN	YES	27.0	IF3	HM	PAINT	29/A005	15/A005	*	
C437	ID1	3' - 0"	7' - 0"	0' - 1 3/4"	WOOD	STAIN		20 MIN	YES	26.0	IF1	HM	PAINT	29/A005	15/A005	3/A005	
C439	ID1	3' - 0"	7' - 0"	0' - 1 3/4"	WOOD	STAIN		20 MIN	YES	26.0	IF1	HM	PAINT	29/A005	15/A005	3/A005	
C443	ID1	3' - 0"	7' - 0"	0' - 1 3/4"	WOOD	STAIN		20 MIN	YES	26.0	IF1	HM	PAINT	29/A005	15/A005	3/A005	
C500a	ID4	3' - 0"	7' - 0"	0' - 1 3/4"	WOOD	STAIN			YES	19.0	IF5	HM	PAINT	29/A005	19/A005	4/A005	6
C501	ID1	3' - 0"	7' - 0"	0' - 1 3/4"	WOOD	STAIN		20 MIN	YES	26.0	IF1	HM	PAINT	29/A005	15/A005	3/A005	
C503	ID1	3' - 0"	7' - 0"	0' - 1 3/4"	WOOD	STAIN		20 MIN	YES	21.0	IF1	HM	PAINT	29/A005	15/A005	2/A005	
C507	ID1	3' - 0"	7' - 0"	0' - 1 3/4"	WOOD	STAIN		20 MIN	YES	22.0	IF1	HM	PAINT	29/A005	15/A005	2/A005	
C511	ID1	3' - 0"	7' - 0"	0' - 1 3/4"	WOOD	STAIN		20 MIN	YES	22.0	IF1	HM	PAINT	29/A005	15/A005	2/A005	
C513	ID4	3' - 0"	7' - 0"	0' - 1 3/4"	WOOD	STAIN		20 MIN	YES	19.0	IF5	HM	PAINT	29/A005	17/A005	4/A005	6
C515	ID1	3' - 0"	7' - 0"	0' - 1 3/4"	WOOD	STAIN		20 MIN	YES	26.0	IF1	HM	PAINT	29/A005	15/A005	3/A005	
C517	ID1	3' - 0"	7' - 0"	0' - 1 3/4"	WOOD	STAIN		20 MIN	YES	26.0	IF1	HM	PAINT	29/A005	15/A005	3/A005	
C519	ID1	3' - 0"	7' - 0"	0' - 1 3/4"	WOOD	STAIN		20 MIN	YES	26.0	IF1	HM	PAINT	29/A005	15/A005	3/A005	
C520	ID1	3' - 0"	7' - 0"	0' - 1 3/4"	WOOD	STAIN		20 MIN	YES	27.0	IF8	HM	PAINT	29/A005	19/A005	4/A005	
C521	ID1	3' - 0"	7' - 0"	0' - 1 3/4"	WOOD	STAIN		20 MIN	YES	26.0	IF1	HM	PAINT	29/A005	15/A005	3/A005	
C523	ID1	3' - 0"	7' - 0"	0' - 1 3/4"	WOOD	STAIN		20 MIN	YES	26.0	IF1	HM	PAINT	29/A005	15/A005	3/A005	
C533	ID1	3' - 0"	7' - 0"	0' - 1 3/4"	WOOD	STAIN		20 MIN	YES	27.0	IF3	HM	PAINT	29/A005	15/A005	*	
C537	ID1	3' - 0"	7' - 0"	0' - 1 3/4"	WOOD	STAIN		20 MIN	YES	26.0	IF1	HM	PAINT	29/A005	15/A005	3/A005	
C539	ID1	3' - 0"	7' - 0"	0' - 1 3/4"	WOOD	STAIN		20 MIN	YES	26.0	IF1	HM	PAINT	29/A005	15/A005	3/A005	
C543	ID1	3' - 0"	7' - 0"	0' - 1 3/4"	WOOD	STAIN		20 MIN	YES	26.0	IF1	HM	PAINT	29/A005	15/A005	3/A005	

DOOR NOTES

1. TYPICAL STUDENT ROOM, RESIDENT ASSISTANT ROOM AND STAFF APARTMENT DOOR FROM CORRIDOR.
2. TYPICAL STAFF APARTMENT BEDROOM CLOSET DOOR.
3. TYPICAL CLOSET DOOR IN APARTMENT.
4. TYPICAL APARTMENT BEDROOM DOOR.
5. NOT USED
6. INSTALL CARD READER LOCKSET SYSTEM, COORDINATE WITH ELECTRICAL DRAWINGS.
7. INSULATED METAL ACCESS DOOR TO LAUNDRY EXHAUST PLENUM. PROVIDE WEATHERSTRIPPING AT FRAME.
8. INSTALL DOOR OPERATOR WITH PUSH BUTTON CONTROLS ON BOTH SIDES OF DOOR, COORDINATE WITH ELECTRICAL DRAWINGS.
9. AT HC STUDENT ROOM DOORS FROM CORRIDOR ON 1ST AND 2ND FLOOR, PROVIDE DOOR OPERATOR AND PUSH BUTTON CONTROLS ON BOTH SIDES OF DOOR, COORDINATE WITH ELECTRICAL DRAWINGS.

DOORS AND WINDOWS - GENERAL NOTES

GENERAL NOTES BELOW PERTAIN TO ALL DOORS (A000 SERIES DRAWINGS)

A INTERIOR DOOR FRAMES SHALL BE STANDARD WELDED HOLLOW METAL FRAMES UNLESS OTHERWISE NOTED.

B ALL HOLLOW METAL DOOR FRAMES SHALL BE PAINTED.

C PROVIDE SEALANT AT PERIMETER OF BOTH SIDES OF DOOR FRAMES.

D ALL WOOD BLOCKING SHALL BE FIRE RETARDANT TREATED, TYPICAL.

E REFER TO ENLARGED FLOOR PLANS OF STUDENT ROOMS, RESIDENT ASSISTANT ROOMS AND STAFF APARTMENTS FOR TYPICAL DOOR LOCATIONS.

F SILL DETAILS INDICATED THUS "*" DENOTES "SAME FINISH THROUGH OPENING."

G SEE DOOR SPECIFICATIONS FOR UNDERCUT CLEARANCE REQUIREMENTS.

H SEE SHEET A004 FOR EXTERIOR DOORS, STAIR DOORS, HEALTH CLINIC DOORS AND LUCKYDAY DOORS.

I SEE SHEET A005 FOR ALL RESIDENTIAL INTERIOR DOORS UNLESS OTHERWISE NOTED.

J SEE ELECTRICAL DRAWINGS AND HARDWARE SCHEDULE FOR DOOR ACCESS CONTROL AND OPERATOR REQUIREMENTS.

K CONTRACTOR TO CONFIRM EXACT EXTERIOR WINDOW AND DOOR OPENING SIZE, AS FRAME SIZES SHOWN ON WINDOW AND DOOR TYPE ELEVATIONS ARE NOMINAL AND DO NOT ACCOUNT FOR BLOCKING AND SHIMMING.

KEY PLAN

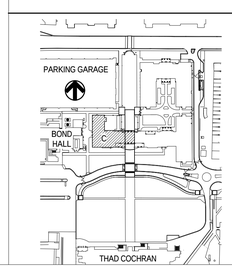

THE McCARTY COMPANY
DESIGN GROUP, P.A.
MAILING ADDRESS: P.O. BOX 440 TUPELO, MS 38802
OFFICE ADDRESS: 533 WEST MAIN STREET TUPELO, MS 38804
TELEPHONE: (662) 844-4400
FAX: (662) 844-0500

DESIGN ARCHITECT
Hanbury Evans Wright Vlattas + Company
120 Atlantic Street
Norfolk, VA 23510
757.321.9600
www.hewv.com

PROJECT TITLE
USM - CENTURY PARK SOUTH
IHL# 208-297
HATTIESBURG, MS

THE UNIVERSITY OF SOUTHERN MISSISSIPPI

PROJECT NO: 2012020
DRAWN BY: SOM
CHECKED BY: JTG
DATE ISSUED: 04 MAR 2013

REVISIONS & ADDENDUMS

SHEET TITLE
BUILDING C - RESIDENTIAL DOOR SCHEDULE

SHEET NUMBER
A003

Plot Date: BID DOCUMENTS - 04 MARCH 2013

3/8/2013 2:44:50 PM

DOOR SCHEDULE - BUILDING A - EXTERIOR / STAIRS

MARK	DOOR				MATERIAL	FINISH	FIRE RATING	HAS CLOSER	HARDWARE	FRAME						COMMENTS
	TYPE	WIDTH	HEIGHT	THICKNESS						TYPE	MATERIAL	FINISH	HEAD	JAMB	SILL	
A100Aa	ED3	3' - 8"	7' - 1 3/4"	1 3/4"	ALUM	-		Yes	2.0	EF3	ALUM	-	1/A007	2-3/A007	4/A007	
A100Ab	ED3	3' - 8"	7' - 1 3/4"	1 3/4"	ALUM	-		Yes	4.0	EF3	ALUM	-	1/A007	2-3/A007	4/A007	
A101b	ED4	3' - 0"	7' - 0"	1 3/4"	STEEL	PREFIN.		Yes	10.0	EF8	HM	PAINT	12/A007	11/A007	8/A007	
A102b	ED2	6' - 0"	7' - 0"	1 3/4"	STEEL	PAINT		Yes	8.0	EF9	HM	PAINT	9/A007	11/A007	8/A007	
A104b	ED5	3' - 0"	7' - 0"	1 3/4"	STEEL	PAINT		Yes	13.0	EF8	HM	PAINT	12/A007	11/A007	8/A007	
A115a	ID6	3' - 0"	7' - 0"	1 3/4"	SCWD	STAIN	90 MIN.	Yes	20.0	IF1	HM	PAINT	32/A005	22/A005	6/A005	
A115b	ED1	3' - 0"	7' - 0"	1 3/4"	STEEL	PAINT		Yes	11.0	EF8	HM	PAINT	12/A007	7/A007	8/A007	
A119a	ED4	3' - 0"	7' - 0"	1 3/4"	STEEL	PREFIN.		Yes	10.0	EF8	HM	PAINT	12/A007	11/A007	8/A007	
A120a	ID6	3' - 0"	7' - 0"	1 3/4"	SCWD	STAIN	90 MIN.	Yes	17.0	IF1	HM	PAINT	32/A005	22/A005	6/A005	
A120b	ED1	3' - 0"	7' - 0"	1 3/4"	STEEL	PAINT		Yes	11.0	EF8	HM	PAINT	12/A007	7/A007	8/A007	
A124b	ED5	3' - 8"	8' - 6"	1 3/4"	STEEL	PAINT		Yes	6.0	EF10	HM	PAINT	9/A007	11/A007	8/A007	
A171	ED1	3' - 0"	7' - 0"	1 3/4"	STEEL	PAINT		Yes	11.0	EF8	HM	PAINT	12/A007	7/A007	8/A007	
A215	ID6	3' - 0"	7' - 0"	1 3/4"	SCWD	STAIN	90 MIN.	Yes	17.0	IF1	HM	PAINT	32/A005	22/A005	6/A005	
A220	ID6	3' - 0"	7' - 0"	1 3/4"	SCWD	STAIN	90 MIN.	Yes	17.0	IF1	HM	PAINT	32/A005	22/A005	6/A005	
A271	ID6	3' - 0"	7' - 0"	1 3/4"	SCWD	STAIN	90 MIN.	Yes	17.0	IF1	HM	PAINT	32/A005	22/A005	6/A005	
A315	ID6	3' - 0"	7' - 0"	1 3/4"	SCWD	STAIN	90 MIN.	Yes	17.0	IF1	HM	PAINT	32/A005	22/A005	6/A005	
A320	ID6	3' - 0"	7' - 0"	1 3/4"	SCWD	STAIN	90 MIN.	Yes	17.0	IF1	HM	PAINT	32/A005	22/A005	6/A005	
A371	ID6	3' - 0"	7' - 0"	1 3/4"	SCWD	STAIN	90 MIN.	Yes	17.0	IF1	HM	PAINT	32/A005	22/A005	6/A005	
A415	ID6	3' - 0"	7' - 0"	1 3/4"	SCWD	STAIN	90 MIN.	Yes	17.0	IF1	HM	PAINT	32/A005	22/A005	6/A005	
A420	ID6	3' - 0"	7' - 0"	1 3/4"	SCWD	STAIN	90 MIN.	Yes	17.0	IF1	HM	PAINT	32/A005	22/A005	6/A005	
A471	ID6	3' - 0"	7' - 0"	1 3/4"	SCWD	STAIN	90 MIN.	Yes	17.0	IF1	HM	PAINT	32/A005	22/A005	6/A005	
A515	ID6	3' - 0"	7' - 0"	1 3/4"	SCWD	STAIN	90 MIN.	Yes	17.0	IF1	HM	PAINT	32/A005	22/A005	6/A005	
A520a	ID6	3' - 0"	7' - 0"	1 3/4"	SCWD	STAIN	90 MIN.	Yes	17.0	IF1	HM	PAINT	32/A005	22/A005	6/A005	
A520b	-	3' - 0"	3' - 0"		STEEL	PAINT	90 MIN.	No	61.0	-	STEEL	PAINT	-	-	-	ATTIC ACCESS DOOR
A571	ID6	3' - 0"	7' - 0"	1 3/4"	SCWD	STAIN	90 MIN.	Yes	17.0	IF1	HM	PAINT	32/A005	22/A005	6/A005	

DOOR SCHEDULE - BUILDING B - EXTERIOR / STAIRS

MARK	DOOR				Material	Finish	FIRE RATING	HAS CLOSER	HARDWARE	FRAME						COMMENTS
	TYPE	WIDTH	HEIGHT	THICKNESS						TYPE	MATERIAL	FINISH	HEAD	JAMB	SILL	
B100b	ED3	3' - 8"	7' - 1 3/4"	1 3/4"	ALUM	-		Yes	2.0	EF4	ALUM	-	1/A007	2-3/A007	4/A007	
B100c	ED3	3' - 8"	7' - 1 3/4"	1 3/4"	ALUM	-		Yes	4.0	EF4	ALUM	-	1/A007	2-3/A007	4/A007	
B102b	ED5	3' - 0"	7' - 0"	1 3/4"	STEEL	PAINT		Yes	13.0	EF8	HM	PAINT	12/A007	11/A007	8/A007	
B115	ID6	3' - 0"	7' - 0"	1 3/4"	SCWD	STAIN	90 MIN.	No	20.0	IF1	HM	PAINT	29/A005	15/A005	8/A005	
B115A	ED1	3' - 0"	7' - 0"	1 3/4"	STEEL	PAINT		Yes	11.0	EF8	HM	PAINT	12/A007	7/A007	8/A007	
B119b	ED5	3' - 0"	7' - 0"	1 3/4"	STEEL	PAINT		Yes	12.0	EF8	HM	PAINT	12/A007	11/A007	8/A007	
B130b	ED4	3' - 0"	7' - 0"	1 3/4"	STEEL	PREFIN.		Yes	10.0	EF8	HM	PAINT	12/A007	11/A007	8/A007	
B134b	ED4	3' - 0"	7' - 0"	1 3/4"	STEEL	PREFIN.		Yes	10.0	EF8	HM	PAINT	12/A007	11/A007	8/A007	
B135a	ID6	3' - 0"	7' - 0"	1 3/4"	SCWD	STAIN	90 MIN.	Yes	17.0	IF1	HM	PAINT	29/A005	15/A005	8/A005	
B135b	ED1	3' - 0"	7' - 0"	1 3/4"	STEEL	PAINT		Yes	11.0	EF8	HM	PAINT	12/A007	7/A007	8/A007	
B151a	ID6	3' - 0"	7' - 0"	1 3/4"	SCWD	STAIN	90 MIN.	Yes	17.0	IF1	HM	PAINT	29/A005	15/A005	8/A005	
B151b	ED1	3' - 0"	7' - 0"	1 3/4"	STEEL	PAINT		Yes	11.0	EF8	HM	PAINT	12/A007	7/A007	8/A007	
B154a	ID6	3' - 0"	7' - 0"	1 3/4"	SCWD	STAIN	90 MIN.	Yes	17.0	IF1	HM	PAINT	29/A005	15/A005	8/A005	
B154b	ED1	3' - 0"	7' - 0"	1 3/4"	STEEL	PAINT		Yes	11.0	EF8	HM	PAINT	12/A007	7/A007	8/A007	
B215	ID6	3' - 0"	7' - 0"	1 3/4"	SCWD	STAIN	90 MIN.	Yes	17.0	IF1	HM	PAINT	29/A005	15/A005	8/A005	
B235	ID6	3' - 0"	7' - 0"	1 3/4"	SCWD	STAIN	90 MIN.	Yes	17.0	IF1	HM	PAINT	29/A005	15/A005	8/A005	
B251	ID6	3' - 0"	7' - 0"	1 3/4"	SCWD	STAIN	90 MIN.	Yes	17.0	IF1	HM	PAINT	29/A005	15/A005	8/A005	
B254	ID6	3' - 0"	7' - 0"	1 3/4"	SCWD	STAIN	90 MIN.	Yes	17.0	IF1	HM	PAINT	29/A005	15/A005	8/A005	
B315	ID6	3' - 0"	7' - 0"	1 3/4"	SCWD	STAIN	90 MIN.	Yes	17.0	IF1	HM	PAINT	29/A005	15/A005	8/A005	
B335	ID6	3' - 0"	7' - 0"	1 3/4"	SCWD	STAIN	90 MIN.	Yes	17.0	IF1	HM	PAINT	29/A005	15/A005	8/A005	
B351	ID6	3' - 0"	7' - 0"	1 3/4"	SCWD	STAIN	90 MIN.	Yes	17.0	IF1	HM	PAINT	29/A005	15/A005	8/A005	
B354	ID6	3' - 0"	7' - 0"	1 3/4"	SCWD	STAIN	90 MIN.	Yes	17.0	IF1	HM	PAINT	29/A005	15/A005	8/A005	
B415	ID6	3' - 0"	7' - 0"	1 3/4"	SCWD	STAIN	90 MIN.	Yes	17.0	IF1	HM	PAINT	29/A005	15/A005	8/A005	
B435	ID6	3' - 0"	7' - 0"	1 3/4"	SCWD	STAIN	90 MIN.	Yes	17.0	IF1	HM	PAINT	29/A005	15/A005	8/A005	
B451	ID6	3' - 0"	7' - 0"	1 3/4"	SCWD	STAIN	90 MIN.	Yes	17.0	IF1	HM	PAINT	29/A005	15/A005	8/A005	
B454	ID6	3' - 0"	7' - 0"	1 3/4"	SCWD	STAIN	90 MIN.	Yes	17.0	IF1	HM	PAINT	29/A005	15/A005	8/A005	
B515	ID6	3' - 0"	7' - 0"	1 3/4"	SCWD	STAIN	90 MIN.	Yes	17.0	IF1	HM	PAINT	29/A005	15/A005	8/A005	
B525b	-	3' - 0"	3' - 0"		STEEL	PAINT		No	61.0	-	-	PAINT	-	-	-	ATTIC ACCESS DOOR
B535	ID6	3' - 0"	7' - 0"	1 3/4"	SCWD	STAIN	90 MIN.	Yes	17.0	IF1	HM	PAINT	29/A005	15/A005	8/A005	
B551	ID6	3' - 0"	7' - 0"	1 3/4"	SCWD	STAIN	90 MIN.	Yes	17.0	IF1	HM	PAINT	29/A005	15/A005	8/A005	
B554	ID6	3' - 0"	7' - 0"	1 3/4"	SCWD	STAIN	90 MIN.	Yes	17.0	IF1	HM	PAINT	29/A005	15/A005	8/A005	

DOOR SCHEDULE - BUILDING C - EXTERIOR / STAIRS

MARK	DOOR				Material	Finish	FIRE RATING	HAS CLOSER	HARDWARE	FRAME						COMMENTS
	TYPE	WIDTH	HEIGHT	THICKNESS						TYPE	MATERIAL	FINISH	HEAD	JAMB	SILL	
C100b	ED3	3' - 0"	7' - 1 3/4"	1 3/4"	ALUM	-		Yes	5.0	EF7	ALUM	-	1/A007	2-3/A007	4/A007	
C101a	ED3	3' - 4"	7' - 1 3/4"	1 3/4"	ALUM	-		Yes	2.0	EF5	ALUM	-	1/A007	2-3/A007	4/A007	
C101b	ED3	3' - 4"	7' - 1 3/4"	1 3/4"	ALUM	-		Yes	4.0	EF5	ALUM	-	1/A007	2-3/A007	4/A007	
C105	ID6	3' - 0"	7' - 0"	1 3/4"	SCWD	STAIN	90 MIN.	Yes	17.0	IF1	HM	PAINT	29/A005	15/A005	8/A005	
C108b	ED5	3' - 0"	7' - 0"	1 3/4"	STEEL	PAINT		Yes	13.0	EF8	HM	PAINT	12/A007	11/A007	8/A007	
C122b	ED5	3' - 0"	7' - 0"	1 3/4"	STEEL	PAINT		Yes	6.0	EF8	HM	PAINT	12/A007	11/A007	8/A007	
C124b	ED2	6' - 0"	7' - 0"	1 3/4"	STEEL	PAINT		Yes	8.0	EF9	HM	PAINT	9/A007	11/A007	8/A007	
C132b	ED4	3' - 0"	7' - 0"	1 3/4"	STEEL	PREFIN.		Yes	10.0	EF8	HM	PAINT	12/A007	11/A007	8/A007	
C134a	ID6	3' - 0"	7' - 0"	1 3/4"	SCWD	STAIN	90 MIN.	Yes	17.0	IF1	HM	PAINT	29/A005	15/A005	8/A005	
C134b	ED1	3' - 0"	7' - 0"	1 3/4"	STEEL	PAINT		Yes	11.0	EF8	HM	PAINT	12/A007	7/A007	8/A007	
C205	ID6	3' - 0"	7' - 0"	1 3/4"	SCWD	STAIN	90 MIN.	Yes	17.0	IF1	HM	PAINT	29/A005	15/A005	8/A005	
C234	ID6	3' - 0"	7' - 0"	1 3/4"	SCWD	STAIN	90 MIN.	Yes	17.0	IF1	HM	PAINT	29/A005	15/A005	8/A005	
C305	ID6	3' - 0"	7' - 0"	1 3/4"	SCWD	STAIN	90 MIN.	Yes	17.0	IF1	HM	PAINT	29/A005	15/A005	8/A005	
C334	ID6	3' - 0"	7' - 0"	1 3/4"	SCWD	STAIN	90 MIN.	Yes	17.0	IF1	HM	PAINT	29/A005	15/A005	8/A005	
C405	ID6	3' - 0"	7' - 0"	1 3/4"	SCWD	STAIN	90 MIN.	Yes	17.0	IF1	HM	PAINT	29/A005	15/A005	8/A005	
C434	ID6	3' - 0"	7' - 0"	1 3/4"	SCWD	STAIN	90 MIN.	Yes	17.0	IF1	HM	PAINT	29/A005	15/A005	8/A005	
C505	ID6	3' - 0"	7' - 0"	1 3/4"	SCWD	STAIN	90 MIN.	Yes	17.0	IF1	HM	PAINT	29/A005	15/A005	8/A005	
C520b	-	3' - 0"	3' - 0"		STEEL	PAINT		No	61.0	-	-	PAINT	-	-	-	ATTIC ACCESS DOOR
C534	ID6	3' - 0"	7' - 0"	1 3/4"	SCWD	STAIN	90 MIN.	Yes	17.0	IF1	HM	PAINT	29/A005	15/A005	8/A005	

DOOR SCHEDULE - HEALTH CLINIC

MARK	DOOR						FIRE RATING	HAS CLOSER	HARDWARE	FINISH						COMMENTS
	TYPE	WIDTH	HEIGHT	THICKNESS	MATERIAL	FINISH				TYPE	MATERIAL	FINISH	HEAD	JAMB	SILL	
HC100a	ED3	3' - 8"	7' - 1 3/4"	1 3/4"	ALUM	-		Yes	4.0	EF3	ALUM	-	1/A007	2-3/A007	4/A007	
HC100b	ED3	3' - 8"	7' - 1 3/4"	1 3/4"	ALUM	-		Yes	2.0	EF3	ALUM	-	1/A007	2-3/A007	4/A007	
HC100c	ED3	3' - 8"	7' - 1 3/4"	1 3/4"	ALUM	-		Yes	5.0	EF2	ALUM	-	1/A007	3/A007	4/A007	
HC100d	ID4	3' - 0"	7' - 0"	1 3/4"	SCWD	STAIN		Yes	16.0	IF1	HM	PAINT	29/A005	15/A005	8/A005	
HC101	ID4	3' - 0"	7' - 0"	1 3/4"	SCWD	STAIN		No	42.0	IF1	HM	PAINT	29/A005	15/A005	8/A005	
HC102	ID4	3' - 0"	7' - 0"	1 3/4"	SCWD	STAIN		No	42.0	IF1	HM	PAINT	29/A005	15/A005	8/A005	
HC103	ID4	3' - 0"	7' - 0"	1 3/4"	SCWD	STAIN		No	48.0	IF1	HM	PAINT	29/A005	15/A005	8/A005	
HC103A	ID1	3' - 0"	7' - 0"	1 3/4"	SCWD	STAIN		No	31.0	IF1	HM	PAINT	29/A005	15/A005	8/A005	
HC104	ID4	3' - 0"	7' - 0"	1 3/4"	SCWD	STAIN		No	42.0	IF1	HM	PAINT	29/A005	15/A005	8/A005	
HC105	ID1	3' - 0"	7' - 0"	1 3/4"	SCWD	STAIN		No	46.0	IF1	HM	PAINT	29/A005	15/A005	8/A005	
HC106	ID4	3' - 0"	7' - 0"	1 3/4"	SCWD	STAIN		No	42.0	IF1	HM	PAINT	29/A005	15/A005	8/A005	
HC107	ID1	3' - 0"	7' - 0"	1 3/4"	SCWD	STAIN		No	33.0	IF1	HM	PAINT	29/A005	15/A005	8/A005	
HC108	ID1	3' - 0"	7' - 0"	1 3/4"	SCWD	STAIN		No	33.0	IF1	HM	PAINT	29/A005	15/A005	8/A005	
HC109	ID1	3' - 0"	7' - 0"	1 3/4"	SCWD	STAIN		No	38.0	IF1	HM	PAINT	29/A005	15/A005	8/A005	
HC110	ID1	3' - 0"	7' - 0"	1 3/4"	SCWD	STAIN		No	39.0	IF1	HM	PAINT	29/A005	15/A005	8/A005	
HC111a	ID4	3' - 0"	7' - 0"	1 3/4"	SCWD	STAIN		No	42.0	IF1	HM	PAINT	29/A005	15/A005	8/A005	
HC111b	ID1	3' - 0"	7' - 0"	1 3/4"	SCWD	STAIN		No	42.0	IF1	HM	PAINT	29/A005	15/A005	8/A005	
HC112	ID1	3' - 0"	7' - 0"	1 3/4"	SCWD	STAIN		No	46.0	IF1	HM	PAINT	29/A005	15/A005	8/A005	
HC113	ID4	3' - 0"	7' - 0"	1 3/4"	SCWD	STAIN		No	44.0	IF1	HM	PAINT	29/A005	15/A005	8/A005	
HC114	ID4	3' - 0"	7' - 0"	1 3/4"	SCWD	STAIN		No	42.0	IF1	HM	PAINT	29/A005	15/A005	8/A005	
HC115	ID4	3' - 0"	7' - 0"	1 3/4"	SCWD	STAIN		No	42.0	IF1	HM	PAINT	29/A005	15/A005	8/A005	
HC116	ID4	3' - 0"	7' - 0"	1 3/4"	SCWD	STAIN		No	43.0	IF1	HM	PAINT	29/A005	15/A005	8/A005	
HC117	ED5	3' - 8"	7' - 0"	1 3/4"	STEEL	PAINT		Yes	12.0	EF8	HM	PAINT	12/A007	11/A007	8/A007	
HC118	ID1	3' - 0"	7' - 0"	1 3/4"	SCWD	STAIN		No	31.0	IF1	HM	PAINT	29/A005	15/A005	8/A005	
HC119	ID1	3' - 0"	7' - 0"	1 3/4"	SCWD	STAIN		No	28.0	IF1	HM	PAINT	29/A005	15/A005	8/A005	
HC120	ID4	3' - 0"	7' - 0"	1 3/4"	SCWD	STAIN		No	42.0	IF1	HM	PAINT	29/A005	15/A005	8/A005	
HC122	ID4	3' - 0"	7' - 0"	1 3/4"	SCWD	STAIN		No	32.0	IF1	HM	PAINT	29/A005	15/A005	8/A005	
HC124	ID4	3' - 0"	7' - 0"	1 3/4"	SCWD	STAIN		No	32.0	IF1	HM	PAINT	29/A005	15/A005	8/A005	
HC124A	ID1	3' - 0"	7' - 0"	1 3/4"	SCWD	STAIN		No	47.0	IF1	HM	PAINT	29/A005	15/A005	8/A005	
HC125	ID4	3' - 0"	7' - 0"	1 3/4"	SCWD	STAIN		No	42.0	IF1	HM	PAINT	29/A005	15/A005	8/A005	
HC126a	ID1	3' - 0"	7' - 0"	1 3/4"	SCWD	STAIN		No	50.0	IF1	HM	PAINT	29/A005	15/A005	8/A005	
HC126b	ID1	3' - 0"	7' - 0"	1 3/4"	SCWD	STAIN		No	50.0	IF1	HM	PAINT	29/A005	15/A005	8/A005	
HC127	ID1	3' - 0"	7' - 0"	1 3/4"	SCWD	STAIN		No	46.0	IF1	HM	PAINT	29/A005	15/A005	8/A005	
HC128	ID1	3' - 0"	7' - 0"	1 3/4"	SCWD	STAIN		No	46.0	IF1	HM	PAINT	29/A005	15/A005	8/A005	
HC129	ID1	3' - 0"	7' - 0"	1 3/4"	SCWD	STAIN		No	45.0	IF1	HM	PAINT	29/A005	15/A005	8/A005	
HC130	ID1	3' - 0"	7' - 0"	1 3/4"	SCWD	STAIN		No	45.0	IF1	HM	PAINT	29/A005	15/A005	8/A005	
HC131	ID4	3' - 0"	7' - 0"	1 3/4"	SCWD	STAIN		No	42.0	IF1	HM	PAINT	29/A005	15/A005	8/A005	
HC132a	ID1	3' - 0"	7' - 0"	1 3/4"	SCWD	STAIN		No	49.0	IF1	HM	PAINT	29/A005	15/A005	8/A005	1/16" LEAD AT DR/FR
HC132b	ID1	3' - 0"	7' - 0"	1 3/4"	SCWD	STAIN		No	49.0	IF1	HM	PAINT	29/A005	15/A005	8/A005	1/16" LEAD AT DR/FR
HC133	ID1	3' - 0"	7' - 0"	1 3/4"	SCWD	STAIN		No	45.0	IF1	HM	PAINT	29/A005	15/A005	8/A005	
HC134	ID1	3' - 0"	7' - 0"	1 3/4"	SCWD	STAIN		No	45.0	IF1	HM	PAINT	29/A005	15/A005	8/A005	
HC135	ID1	3' - 0"	7' - 0"	1 3/4"	SCWD	STAIN		No	45.0	IF1	HM	PAINT	29/A005	15/A005	8/A005	
HC137	ID1	3' - 0"	7' - 0"	1 3/4"	SCWD	STAIN		No	45.0	IF1	HM	PAINT	29/A005	15/A005	8/A005	
HC138	ID1	3' - 0"	7' - 0"	1 3/4"	SCWD	STAIN		No	45.0	IF1	HM	PAINT	29/A005	15/A005	8/A005	
HC139	ID4	3' - 0"	7' - 0"	1 3/4"	SCWD	STAIN		No	42.0	IF1	HM	PAINT	29/A005	15/A005	8/A005	
HC140	ID1	3' - 0"	7' - 0"	1 3/4"	SCWD	STAIN		No	45.0	IF1	HM	PAINT	29/A005	15/A005	8/A005	
HC141	ID1	3' - 0"	7' - 0"	1 3/4"	SCWD	STAIN		No	45.0	IF1	HM	PAINT	29/A005	15/A005	8/A005	
HC142	ID1	3' - 0"	7' - 0"	1 3/4"	SCWD	STAIN		No	45.0	IF1	HM	PAINT	29/A005	15/A005	8/A005	
HC143	ID1	3' - 0"	7' - 0"	1 3/4"	SCWD	STAIN		No	31.0	IF1	HM	PAINT	29/A005	15/A005	8/A005	
HC144	ID4	3' - 0"	7' - 0"	1 3/4"	SCWD	STAIN		No	42.0	IF1	HM	PAINT	29/A005	15/A005	8/A005	
HC145	ID1	3' - 0"	7' - 0"	1 3/4"	SCWD	STAIN		No	46.0	IF1	HM	PAINT	29/A005	15/A005	8/A005	
HC146	ID1	3' - 0"	7' - 0"	1 3/4"	SCWD	STAIN		No	45.0	IF1	HM	PAINT	29/A005	15/A005	8/A005	
HC147	ID4	3' - 0"	7' - 0"	1 3/4"	SCWD	STAIN		No	42.0	IF1	HM	PAINT	29/A005	15/A005	8/A005	
HC148	ID1	3' - 0"	7' - 0"	1 3/4"	SCWD	STAIN		No	50.0	IF1	HM	PAINT	29/A005	15/A005	8/A005	
HC148A	ID1	3' - 0"	7' - 0"	1 3/4"	SCWD	STAIN		No	47.0	IF1	HM	PAINT	29/A005	15/A005	8/A005	
HC149	ID1	3' - 0"	7' - 0"	1 3/4"	SCWD	STAIN		No	45.0	IF1	HM	PAINT	29/A005	15/A005	8/A005	
HC150	ID1	3' - 0"	7' - 0"	1 3/4"	SCWD	STAIN		No	45.0	IF1	HM	PAINT	29/A005	15/A005	8/A005	
HC151	ID1	3' - 0"	7' - 0"	1 3/4"	SCWD	STAIN		No	45.0	IF1	HM	PAINT	29/A005	15/A005	8/A005	
HC152	ID1	3' - 0"	7' - 0"	1 3/4"	SCWD	STAIN		No	45.0	IF1	HM	PAINT	29/A005	15/A005	8/A005	
HC154	ID1	3' - 0"	7' - 0"	1 3/4"	SCWD	STAIN		No	46.0	IF1	HM	PAINT	29/A005	15/A005	8/A005	
HC156Aa	ID4	3' - 0"	7' - 0"	1 3/4"	SCWD	STAIN		No	32.0	IF1	HM	PAINT	29/A005	15/A005	8/A005	
HC156Ab	ID4	3' - 0"	7' - 0"	1 3/4"	SCWD	STAIN		No	32.0	IF1	HM	PAINT	29/A005	15/A005	8/A005	
HC156B	ID4	3' - 0"	7' - 0"	1 3/4"	SCWD	STAIN		No	42.0	IF1	HM	PAINT	29/A005	15/A005	8/A005	
HC156C	ID4	3' - 0"	7' - 0"	1 3/4"	SCWD	STAIN		No	42.0	IF1	HM	PAINT	29/A005	15/A005	8/A005	
HC156D	ID1	3' - 0"	7' - 0"	1 3/4"	SCWD	STAIN		No	40.0	IF1	HM	PAINT	29/A005	15/A005	8/A005	
HC156E	ID1	3' - 0"	7' - 0"	1 3/4"	SCWD	STAIN		No	46.0	IF1	HM	PAINT	29/A005	15/A005	8/A005	
HC156F	ID1	2' - 8"	7' - 0"	1 3/4"	SCWD	STAIN		No	40.0	IF1	HM	PAINT	29/A005	15/A005	8/A005	
HC160a	ID4	3' - 0"	7' - 0"	1 3/4"	SCWD	STAIN		Yes	41.0	IF1	HM	PAINT	29/A005	15/A005	8/A005	
HC160b	ID1	3' - 0"	7' - 0"	1 3/4"	SCWD	STAIN		No	29.0	IF1	HM	PAINT	29/A005	15/A005	8/A005	
HC160c	ED1	3' - 0"	7' - 0"	1 3/4"	STEEL	PAINT		Yes	9.0	EF8	HM	PAINT	12/A007	11/A007	8/A007	
HC161a	ID4	3' - 8"	7' - 0"	1 3/4"	SCWD	STAIN		No	41.0	IF1	HM	PAINT	29/A005	15/A005	8/A005	
HC161b	ID1	3' - 0"	7' - 0"	1 3/4"	SCWD	STAIN		No	41.0	IF1	HM	PAINT	29/A005	15/A005	8/A005	
HC162a	ED3	3' - 10"	7' - 1 3/4"	1 3/4"	ALUM	-		Yes	3.0	EF1	ALUM	-	1/A007	2/A007	4/A007	
HC162b	ID1	3' - 8"	7' - 0"	1 3/4"	SCWD	STAIN		No	41.0	IF1	HM	PAINT	29/A005	15/A005	8/A005	
HC163a	ID4	3' - 0"	7' - 0"	1 3/4"	SCWD	STAIN		No	29.0	IF1	HM	PAINT	29/A005	15/A005	8/A005	
HC163b	ID4	3' - 0"	7' - 0"	1 3/4"	SCWD	STAIN		No	30.0	IF1	HM	PAINT	29/A005	15/A005	8/A005	
HC164	-	3' - 0"	7' - 0"	1 3/4"	-	-		No	46.0	IF2	HM	PAINT	29/A005	15/A005	-	CASED OPENING

DOOR SCHEDULE - LUCKYDAY

MARK	DOOR				Material	Finish	FIRE RATING	HAS CLOSER	HARDWARE	FRAME						COMMENTS
	TYPE	WIDTH	HEIGHT	THICKNESS						TYPE	MATERIAL	FINISH	HEAD	JAMB	SILL	
LD100a	ED3	3' - 4"	7' - 1 3/4"	1 3/4"	ALUM	-		Yes	2.0	EF5	ALUM	-	1/A007	2-3/A007	4/A007	
LD100b	ED3	3' - 4"	7' - 1 3/4"	1 3/4"	ALUM	-		Yes	4.0	EF5	ALUM	-	1/A007	2-3/A007	4/A007	
LD101	ID4	3' - 0"	7' - 0"	1 3/4"	SCWD	STAIN		No	42.0	IF1	HM	PAINT	29/A005	15/A005	8/A005	
LD102	ID4	3' - 0"	7' - 0"	1 3/4"	SCWD	STAIN		No	42.0	IF1	HM	PAINT	29/A005	15/A005	8/A005	
LD103	ID4	3' - 0"	7' - 0"	1 3/4"	SCWD	STAIN		No	42.0	IF1	HM	PAINT	29/A005	15/A005	8/A005	
LD104	ID4	3' - 0"	7' - 0"	1 3/4"	SCWD	STAIN		No	42.0	IF1	HM	PAINT	29/A005	15/A005	8/A005	
LD105	ID4	3' - 0"	7' - 0"	1 3/4"	SCWD	STAIN		No	42.0	IF1	HM	PAINT	29/A005	15/A005	8/A005	
LD107	ID1	3' - 0"	7' - 0"	1 3/4"	SCWD	STAIN		No	28.0	IF1	HM	PAINT	29/A005	15/A005	8/A005	
LD108	ID1	3' - 0"	7' - 0"	1 3/4"	SCWD	STAIN		No	21.0	IF1	HM	PAINT	29/A005	15/A005	8/A005	
LD109	ID1	3' - 0"	7' - 0"	1 3/4"	SCWD	STAIN		No	21.0	IF1	HM	PAINT	29/A005	15/A005	8/A005	
LD111	ED3	3' - 0"	7' - 1 3/4"	1 3/4"	ALUM	-		Yes	1.0	EF6	ALUM	-	1/A007	2-3/A007	4/A007	
LD112A	ID1	3' - 0"	7' - 0"	1 3/4"	SCWD	STAIN	45 MIN.	Yes	22.0	IF1	HM	PAINT	29/A005	15/A005	8/A005	
LD112a	ID4	3' - 0"	7' - 0"	1 3/4"	SCWD	STAIN	45 MIN.	Yes	27.0	IF1	HM	PAINT	29/A005	15/A005	8/A005	
LD112b	ID4	3' - 0"	7' - 0"	1 3/4"	SCWD	STAIN		No	21.0	IF1	HM	PAINT	29/A005	15/A005	8/A005	
LD112c	ED3	3' - 0"	7' - 1 3/4"	1 3/4"	ALUM	-		Yes	1.0	EF6	ALUM	-	1/A007	2-3/A007	4/A007	
LD113	ID1	3' - 0"	7' - 0"	1 3/4"	SCWD	STAIN		Yes	36.0	IF1	HM	PAINT	29/A005	15/A005	8/A005	
LD114	ID1	3' - 0"	7' - 0"	1 3/4"	SCWD	STAIN		Yes	36.0	IF1	HM	PAINT	29/A005	15/A005	8/A005	
LD115	ID7	6' - 0"	7' - 0"	1 3/4"	SCWD	STAIN	45 MIN.	Yes	14.0	IF1	HM	PAINT	29/A005	15/A005	8/A005	
LD118	ED1	3' - 0"	7' - 0"	1 3/4"	STEEL	PAINT		Yes	11.0	EF8	HM	PAINT	12/A007	7/A007	8/A007	
LD217A	ID2	6' - 0"	7' - 0"	1 3/4"	SCWD	STAIN		No	37.0	IF1	HM	PAINT	29/A005	15/A005	8/A005	
LD217Ba	ID8	3' - 0"	7' - 0"	1 3/4"	SCWD	STAIN		No	35.0	IF1	HM	PAINT	29/A005	15/A005	8/A005	DUTCH DOOR
LD217Bb	ID9	5' - 0"	7' - 0"	5/8"	WOOD	STAIN		No	-	-	-	STAIN	-	-	-	WOOD COILING DOOR
LD217C	ID2	6' - 0"	7' - 0"	1 3/4"	SCWD	STAIN		No	37.0	IF1	HM	PAINT	29/A005	15/A005	8/A005	
LD218	ID6	3' - 0"	7' - 0"	1 3/4"	SCWD	STAIN	45 MIN.	Yes	20.0	IF1	HM	PAINT	29/A005	15/A005	8/A005	

GENERAL NOTES

- A INTERIOR DOOR FRAMES SHALL BE STANDARD WELDED HOLLOW METAL FRAMES UNLESS OTHERWISE NOTED.
- B ALL HOLLOW METAL DOOR FRAMES SHALL BE PAINTED.
- C PROVIDE SEALANT AT PERIMETER OF BOTH SIDES OF DOOR FRAMES.
- D ALL WOOD BLOCKING SHALL BE FIRE RETARDANT TREATED, TYPICAL.
- E REFER TO ENLARGED FLOOR PLANS OF STUDENT ROOMS, RESIDENT ASSISTANT ROOMS AND STAFF APARTMENTS FOR TYPICAL DOOR LOCATIONS.
- F SILL DETAILS INDICATED THUS "*" DENOTES "SAME FINISH THROUGH OPENING."
- G SEE DOOR SPECIFICATIONS FOR UNDERCUT CLEARANCE REQUIREMENTS.
- H SEE SHEET A004 FOR EXTERIOR DOORS, STAIR DOORS, HEALTH CLINIC DOORS AND LUCKYDAY DOORS.
- I SEE SHEET A005 FOR ALL RESIDENTIAL INTERIOR DOORS UNLESS OTHERWISE NOTED.
- J SEE ELECTRICAL DRAWINGS AND HARDWARE SCHEDULE FOR DOOR ACCESS CONTROL AND OPERATOR REQUIREMENTS.
- K CONTRACTOR TO CONFIRM EXACT EXTERIOR WINDOW AND DOOR OPENING SIZE, AS FRAME SIZES SHOWN ON WINDOW AND DOOR TYPE ELEVATIONS ARE NOMINAL AND DO NOT ACCOUNT FOR BLOCKING AND SHIMMING.

REGISTERED ARCHITECT Thomas D. Saunders 3693 Tupelo, MS STATE OF MISSISSIPPI
04 march 2013

THE McCARTY COMPANY
DESIGN GROUP, P.A.
MAILING ADDRESS: P.O. BOX 440 TUPELO, MS 38802
OFFICE ADDRESS: 533 WEST MAIN STREET TUPELO, MS 38804
TELEPHONE: (662) 844-4400 FAX: (662) 844-0500

DESIGN ARCHITECT
Hanbury Evans Wright Vlattas + Company
120 Atlantic Street
Norfolk, VA 23510
757.321.9600
www.hevw.com

PROJECT TITLE
USM - CENTURY PARK SOUTH
IHL# 208-297
HATTIESBURG, MISSISSIPPI

THE UNIVERSITY OF SOUTHERN MISSISSIPPI

PROJECT NO: 2012020
DRAWN BY: JCF
CHECKED BY: JPH
DATE ISSUED: 04 MAR 2013

REVISIONS & ADDENDUMS

SHEET TITLE
EXTERIOR / STAIR / HEALTH CLINIC/LUCKYDAY DOOR SCHEDULE

SHEET NUMBER
A004

3/11/2013 4:42:17 AM

Plot Date: BID DOCUMENTS - 04 MARCH 2013

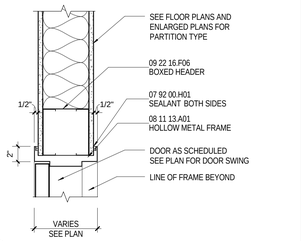

29 HEAD DETAIL
1 1/2" = 1'-0" 0' 8" 1'-4" 2'
A001, A002, A003

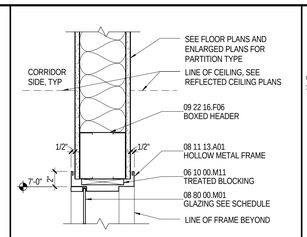

30 HEAD DETAIL
1 1/2" = 1'-0" 0' 8" 1'-4" 2'
A001

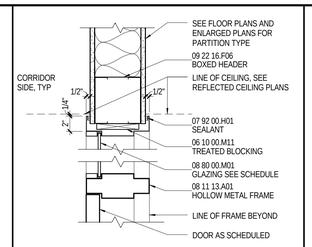

31 HEAD DETAIL
1 1/2" = 1'-0" 0' 8" 1'-4" 2'
A001

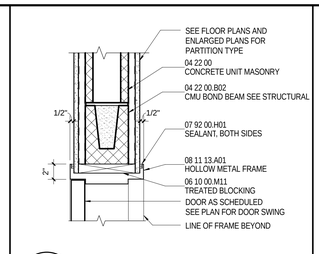

32 HEAD DETAIL
1 1/2" = 1'-0" 0' 8" 1'-4" 2'
A002

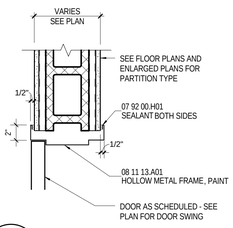

22 JAMB DETAIL
1 1/2" = 1'-0" 0' 8" 1'-4" 2'
A002

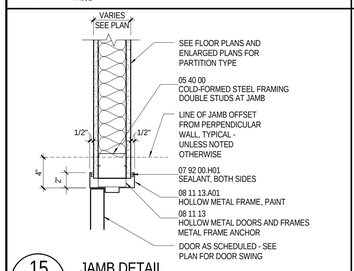

15 JAMB DETAIL
1 1/2" = 1'-0" 0' 8" 1'-4" 2'
A001, A002, A003

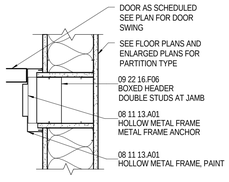

16 JAMB DETAIL
1 1/2" = 1'-0" 0' 8" 1'-4" 2'
A001, A002, A003

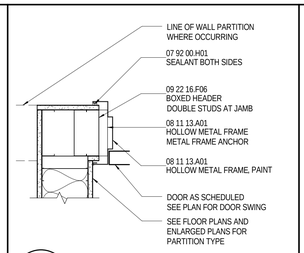

17 JAMB DETAIL
1 1/2" = 1'-0" 0' 8" 1'-4" 2'
A001, A002, A003

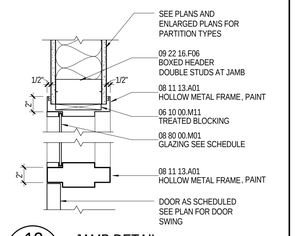

18 JAMB DETAIL
1 1/2" = 1'-0" 0' 8" 1'-4" 2'
A001

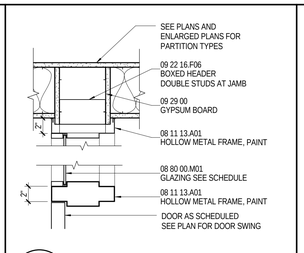

19 JAMB DETAIL
1 1/2" = 1'-0" 0' 8" 1'-4" 2'
A001

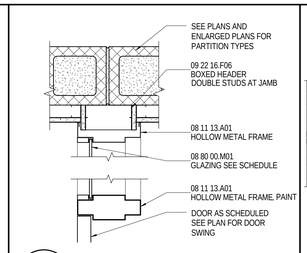

20 JAMB DETAIL
1 1/2" = 1'-0" 0' 8" 1'-4" 2'
A001, A002, A003

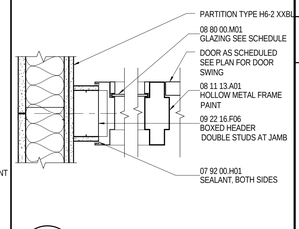

21 JAMB DETAIL
1 1/2" = 1'-0" 0' 8" 1'-4" 2'
A001, A002, A003

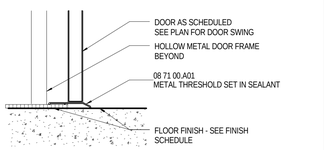

8 SILL DETAIL
1 1/2" = 1'-0" 0' 8" 1'-4" 2'
A001, A002

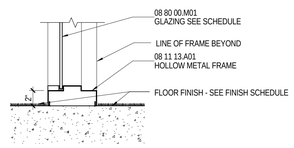

1 SILL DETAIL
1 1/2" = 1'-0" 0' 8" 1'-4" 2'
A001

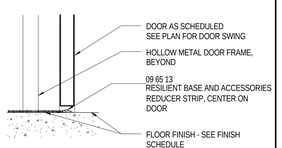

2 SILL DETAIL
1 1/2" = 1'-0" 0' 8" 1'-4" 2'
A001, A002, A003

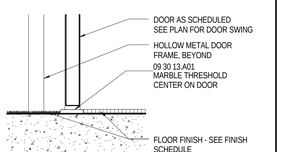

3 SILL DETAIL
1 1/2" = 1'-0" 0' 8" 1'-4" 2'
A001, A002, A003

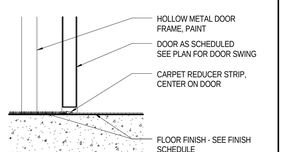

4 SILL DETAIL
1 1/2" = 1'-0" 0' 8" 1'-4" 2'
A001, A002, A003

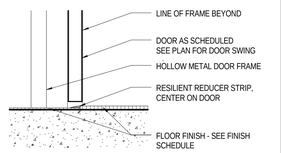

5 SILL DETAIL
1 1/2" = 1'-0" 0' 8" 1'-4" 2'
A001, A002, A003

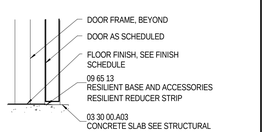

6 SILL DETAIL
1 1/2" = 1'-0" 0' 8" 1'-4" 2'
A001, A002, A003

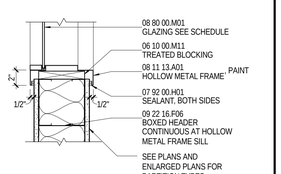

7 SILL DETAIL
1 1/2" = 1'-0" 0' 8" 1'-4" 2'
A001

MATERIAL KEYING

03 30 00.A03	CONCRETE SLAB SEE STRUCTURAL
04 22 00	CONCRETE UNIT MASONRY
04 22 00.B02	CMU BOND BEAM SEE STRUCTURAL
05 40 00	COLD-FORMED STEEL FRAMING
06 10 00.M11	TREATED BLOCKING
07 92 00.H01	SEALANT
08 11 13	HOLLOW METAL DOORS AND FRAMES
08 11 13.A01	HOLLOW METAL FRAME
08 71 00.A01	METAL THRESHOLD SET IN SEALANT
08 80 00.M01	GLAZING SEE SCHEDULE
09 22 16.F06	BOXED HEADER
09 29 00	GYPSUM BOARD
09 30 13.A01	MARBLE THRESHOLD
09 65 13	RESILIENT BASE AND ACCESSORIES

DOORS AND WINDOWS - GENERAL NOTES

GENERAL NOTES BELOW PERTAIN TO ALL DOORS (A000 SERIES DRAWINGS)

A INTERIOR DOOR FRAMES SHALL BE STANDARD WELDED HOLLOW METAL FRAMES UNLESS OTHERWISE NOTED.
B ALL HOLLOW METAL DOOR FRAMES SHALL BE PAINTED.
C PROVIDE SEALANT AT PERIMETER OF BOTH SIDES OF DOOR FRAMES.
D ALL WOOD BLOCKING SHALL BE FIRE RETARDANT TREATED, TYPICAL.
E REFER TO ENLARGED FLOOR PLANS OF STUDENT ROOMS, RESIDENT ASSISTANT ROOMS AND STAFF APARTMENTS FOR TYPICAL DOOR LOCATIONS.
F SILL DETAILS INDICATED THUS "*" DENOTES "SAME FINISH THROUGH OPENING."
G SEE DOOR SPECIFICATIONS FOR UNDERCUT CLEARANCE REQUIREMENTS.
H SEE SHEET A004 FOR EXTERIOR DOORS, STAIR DOORS, HEALTH CLINIC DOORS AND LUCKYDAY DOORS.
I SEE SHEET A005 FOR ALL RESIDENTIAL INTERIOR DOORS UNLESS OTHERWISE NOTED.
J SEE ELECTRICAL DRAWINGS AND HARDWARE SCHEDULE FOR DOOR ACCESS CONTROL AND OPERATOR REQUIREMENTS.
K CONTRACTOR TO CONFIRM EXACT EXTERIOR WINDOW AND DOOR OPENING SIZE, AS FRAME SIZES SHOWN ON WINDOW AND DOOR TYPE ELEVATIONS ARE NOMINAL AND DO NOT ACCOUNT FOR BLOCKING AND SHIMMING.

KEY PLAN

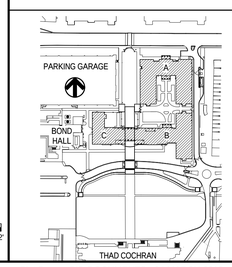

DESIGN ARCHITECT
Hanbury Evans Wright Vlattas + Company
120 Atlantic Street
Norfolk, VA 23510
757.321.9600
www.hewv.com

THE McCARTY COMPANY
DESIGN GROUP, P.A.
TELEPHONE: (662) 844-4400
FAX: (662) 844-0500
OFFICE ADDRESS: 535 WEST MAIN STREET TUPELO, MS 38804
MAILING ADDRESS: P.O. BOX 440 TUPELO, MS 38802

PROJECT TITLE
USM - CENTURY PARK SOUTH
IHL# 208-297
HATTIESBURG, MISSISSIPPI

THE UNIVERSITY OF SOUTHERN MISSISSIPPI

PROJECT NO: 2012020
DRAWN BY: SOM
CHECKED BY: JTG
DATE ISSUED: 04 MAR 2013

REVISIONS & ADDENDUMS

SHEET TITLE
DOOR DETAILS

SHEET NUMBER
A005
77 of 458

3/4/2013 1:13:37 PM

Plot Date: BID DOCUMENTS - 04 MARCH 2013

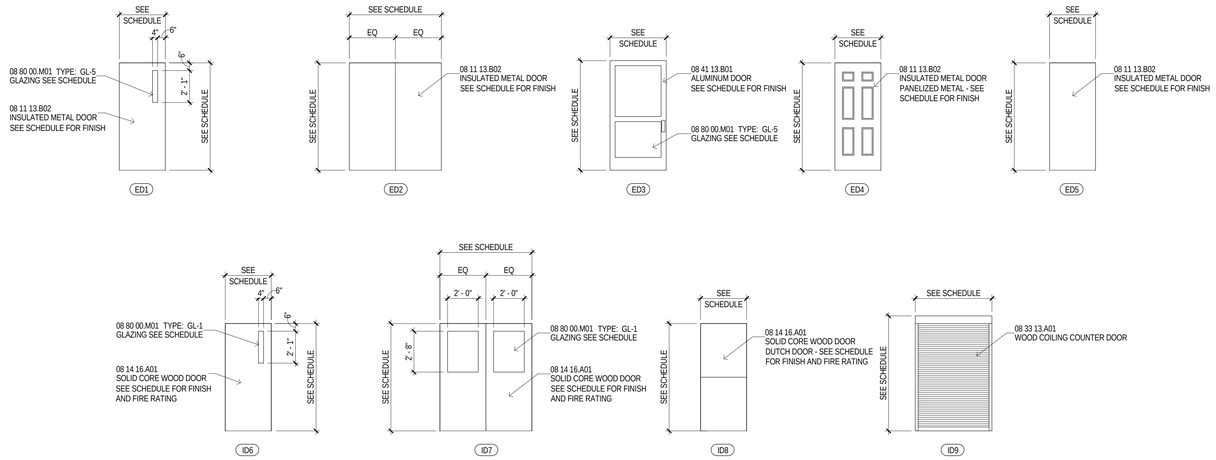

1 DOOR TYPES
1/4" = 1'-0"

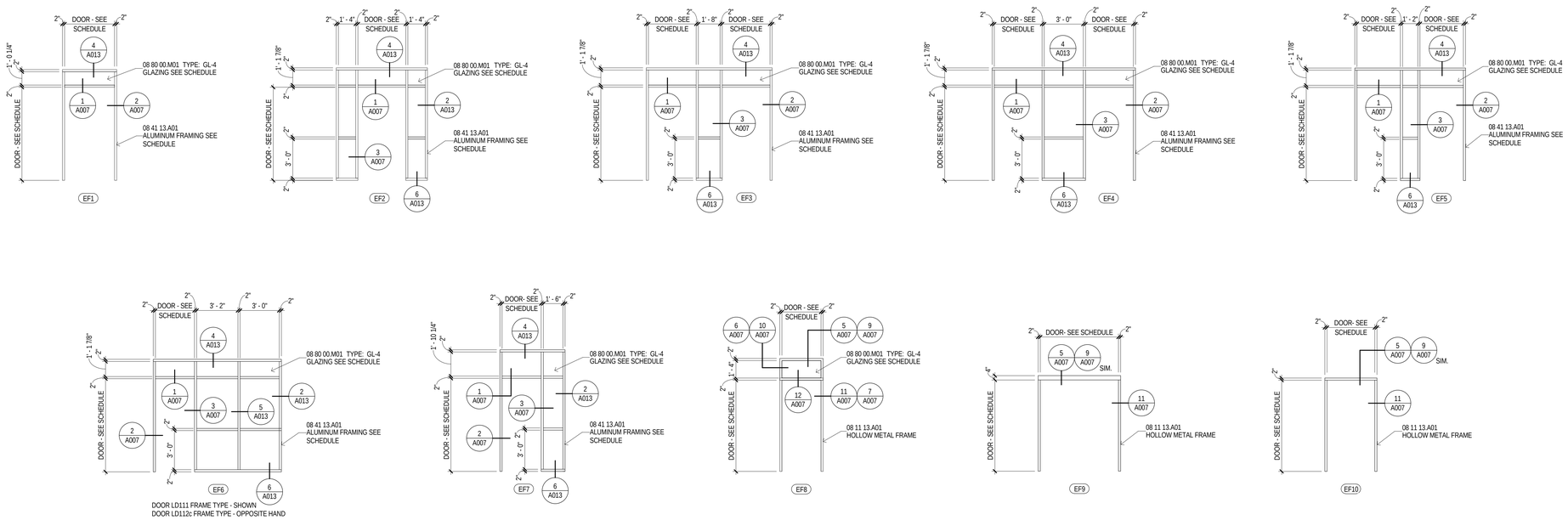

2 FRAME TYPES
1/4" = 1'-0"

MATERIAL KEYING

08 11 13.A01	HOLLOW METAL FRAME
08 11 13.B02	INSULATED METAL DOOR
08 14 16.A01	SOLID CORE WOOD DOOR
08 33 13.A01	WOOD COILING COUNTER DOOR
08 41 13.A01	ALUMINUM FRAMING SEE SCHEDULE
08 41 13.B01	ALUMINUM DOOR
08 80 00.M01	GLAZING SEE SCHEDULE

GENERAL NOTES

A INTERIOR DOOR FRAMES SHALL BE STANDARD WELDED HOLLOW METAL FRAMES UNLESS OTHERWISE NOTED.
B ALL HOLLOW METAL DOOR FRAMES SHALL BE PAINTED.
C PROVIDE SEALANT AT PERIMETER OF BOTH SIDES OF DOOR FRAMES.
D ALL WOOD BLOCKING SHALL BE FIRE RETARDANT TREATED, TYPICAL.
E REFER TO ENLARGED FLOOR PLANS OF STUDENT ROOMS, RESIDENT ASSISTANT ROOMS AND STAFF APARTMENTS FOR TYPICAL DOOR LOCATIONS.
F SILL DETAILS INDICATED THUS "*" DENOTES "SAME FINISH THROUGH OPENING."
G SEE DOOR SPECIFICATIONS FOR UNDERCUT CLEARANCE REQUIREMENTS.
H SEE SHEET A004 FOR EXTERIOR DOORS, STAIR DOORS, HEALTH CLINIC DOORS AND LUCKYDAY DOORS.
I SEE SHEET A005 FOR ALL RESIDENTIAL INTERIOR DOORS UNLESS OTHERWISE NOTED.
J SEE ELECTRICAL DRAWINGS AND HARDWARE SCHEDULE FOR DOOR ACCESS CONTROL AND OPERATOR REQUIREMENTS.
K CONTRACTOR TO CONFIRM EXACT EXTERIOR WINDOW AND DOOR OPENING SIZE. AS FRAME SIZES SHOWN ON WINDOW AND DOOR TYPE ELEVATIONS ARE NOMINAL AND DO NOT ACCOUNT FOR BLOCKING AND SHIMMING.

REGISTERED ARCHITECT
Thomas McLaughlin's
Jagger
Tupelo, MS
STATE OF MISSISSIPPI
04 March 2013

THE McCARTY COMPANY
DESIGN GROUP, P.A.
TELEPHONE: (662) 844-4400
FAX: (662) 844-0520
OFFICE ADDRESS: 533 WEST MAIN STREET TUPELO, MS 38804
MAILING ADDRESS: P.O. BOX 440 TUPELO, MS 38802

DESIGN ARCHITECT
Hanbury Evans Wright Vlattas + Company
120 Atlantic Street
Norfolk, VA 23510
757.321.9600
www.hewv.com

PROJECT TITLE
USM - CENTURY PARK SOUTH
IHL# 208-297
HATTIESBURG, MISSISSIPPI

THE UNIVERSITY OF SOUTHERN MISSISSIPPI

PROJECT NO: 2012020
DRAWN BY: JCF
CHECKED BY: JPH
DATE ISSUED: 04 MAR 2013

REVISIONS & ADDENDUMS

SHEET TITLE
EXTERIOR / STAIR / HEALTH CLINIC/LUCKYDAY DOOR FRAME TYPES

SHEET NUMBER
A006

3/11/2013 4:42:34 AM

Plot Date: BID DOCUMENTS - 04 MARCH 2013

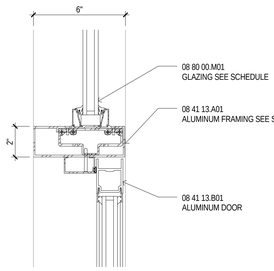

1 — ALUMINUM DOOR HEAD WITH TRANSOM
3" = 1'-0"

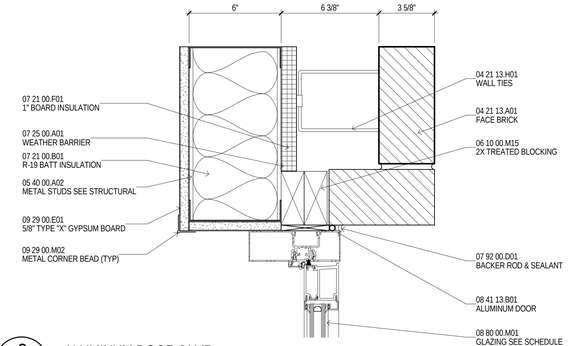

2 — ALUMINUM DOOR JAMB
3" = 1'-0"

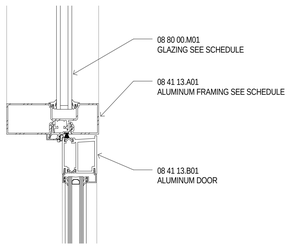

3 — ALUMINUM DOOR JAMB W/ SIDELITE
3" = 1'-0"

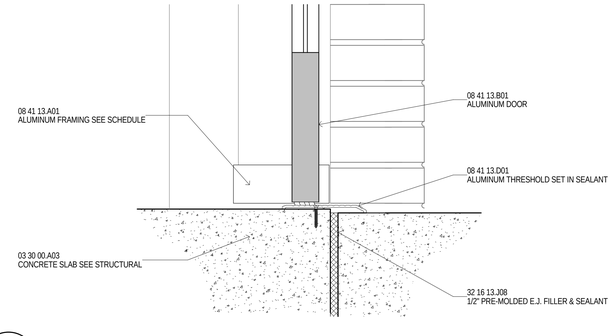

4 — ALUMINUM DOOR SILL AT FINISH FLOOR
3" = 1'-0"

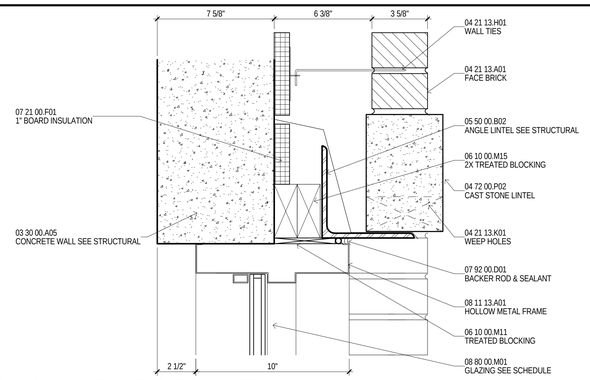

5 — HOLLOW METAL HEAD AT CONCRETE WALL
3" = 1'-0"

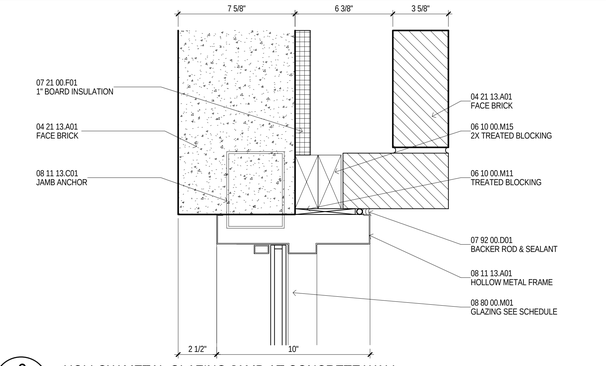

6 — HOLLOW METAL GLAZING JAMB AT CONCRETE WALL
3" = 1'-0"

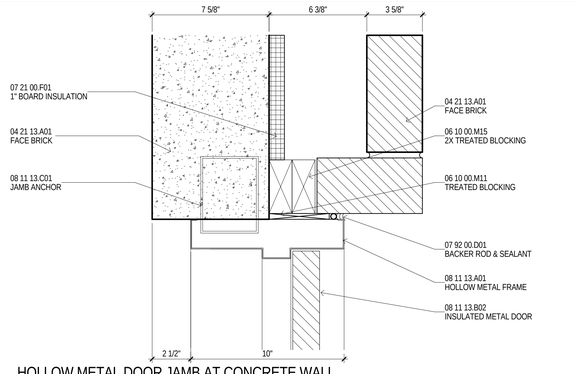

7 — HOLLOW METAL DOOR JAMB AT CONCRETE WALL
3" = 1'-0"

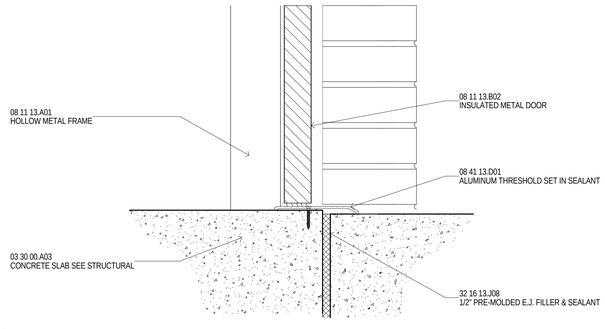

8 — EXTERIOR DOOR SILL AT FINISH FLOOR
3" = 1'-0"

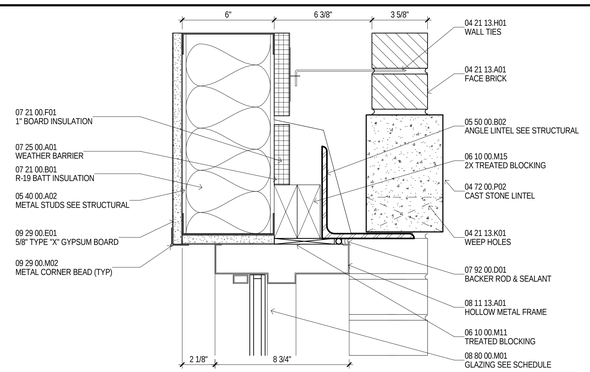

9 — DW_HM Head (Stud)
3" = 1'-0"

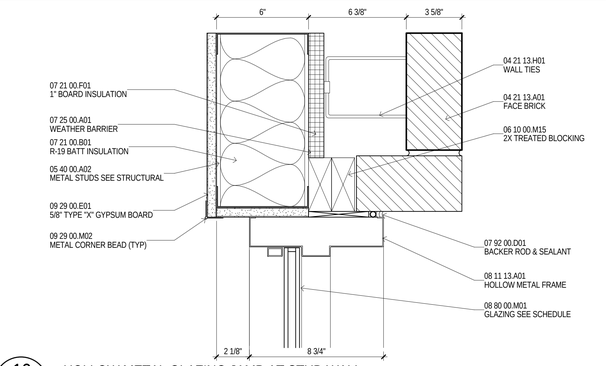

10 — HOLLOW METAL GLAZING JAMB AT STUD WALL
3" = 1'-0"

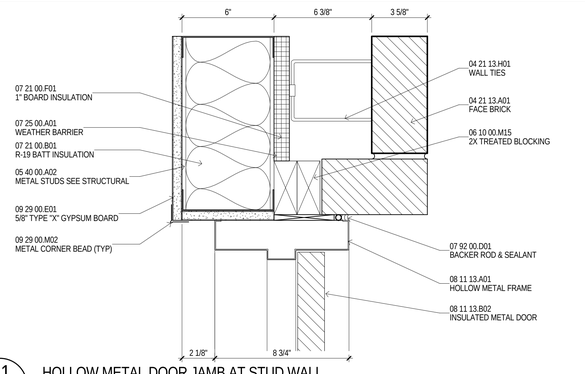

11 — HOLLOW METAL DOOR JAMB AT STUD WALL
3" = 1'-0"

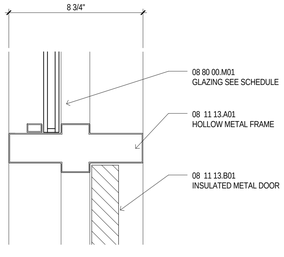

12 — HOLLOW METAL DOOR/GLAZING HEAD
3" = 1'-0"

MATERIAL KEYING

03 30 00.A03	CONCRETE SLAB SEE STRUCTURAL
03 30 00.A05	CONCRETE WALL SEE STRUCTURAL
04 21 13.A01	FACE BRICK
04 21 13.H01	WALL TIES
04 21 13.K01	WEEP HOLES
04 72 00.P02	CAST STONE LINTEL
05 40 00.A02	METAL STUDS SEE STRUCTURAL
05 50 00.B02	ANGLE LINTEL SEE STRUCTURAL
06 10 00.M11	TREATED BLOCKING
06 10 00.M15	2X TREATED BLOCKING
07 21 00.B01	R-19 BATT INSULATION
07 21 00.F01	1" BOARD INSULATION
07 25 00.A01	WEATHER BARRIER
07 92 00.D01	BACKER ROD & SEALANT
08 11 13.A01	HOLLOW METAL FRAME
08 11 13.B02	INSULATED METAL DOOR
08 11 13.C01	JAMB ANCHOR
08 41 13.A01	ALUMINUM FRAMING SEE SCHEDULE
08 41 13.B01	ALUMINUM DOOR
08 41 13.D01	ALUMINUM THRESHOLD SET IN SEALANT
08 80 00.M01	GLAZING SEE SCHEDULE
09 29 00.E01	5/8" TYPE "X" GYPSUM BOARD
09 29 00.M02	METAL CORNER BEAD (TYP)
32 16 13.J08	1/2" PRE-MOLDED E.J. FILLER & SEALANT

GENERAL NOTES

A INTERIOR DOOR FRAMES SHALL BE STANDARD WELDED HOLLOW METAL FRAMES UNLESS OTHERWISE NOTED.
B ALL HOLLOW METAL DOOR FRAMES SHALL BE PAINTED.
C PROVIDE SEALANT AT PERIMETER OF BOTH SIDES OF DOOR FRAMES.
D ALL WOOD BLOCKING SHALL BE FIRE RETARDANT TREATED, TYPICAL.
E REFER TO ENLARGED FLOOR PLANS OF STUDENT ROOMS, RESIDENT ASSISTANT ROOMS AND STAFF APARTMENTS FOR TYPICAL DOOR LOCATIONS.
F SILL DETAILS INDICATED THUS "*" DENOTES "SAME FINISH THROUGH OPENING."
G SEE DOOR SPECIFICATIONS FOR UNDERCUT CLEARANCE REQUIREMENTS.
H SEE SHEET A004 FOR EXTERIOR DOORS, STAIR DOORS, HEALTH CLINIC DOORS AND LUCKYDAY DOORS.
I SEE SHEET A005 FOR ALL RESIDENTIAL INTERIOR DOORS UNLESS OTHERWISE NOTED.
J SEE ELECTRICAL DRAWINGS AND HARDWARE SCHEDULE FOR DOOR ACCESS CONTROL AND OPERATOR REQUIREMENTS.
K CONTRACTOR TO CONFIRM EXACT EXTERIOR WINDOW AND DOOR OPENING SIZE, AS FRAME SIZES SHOWN ON WINDOW AND DOOR TYPE ELEVATIONS ARE NOMINAL AND DO NOT ACCOUNT FOR BLOCKING AND SHIMMING.

REGISTERED ARCHITECT
Thomas Maunders
3482
Tupelo, MS
STATE OF MISSISSIPPI
04 march 2013

THE McCARTY COMPANY
DESIGN GROUP, P.A.
TELEPHONE: (662) 844-4400
FAX: (662) 844-0520
OFFICE ADDRESS: 533 WEST MAIN STREET TUPELO, MS 38804
MAILING ADDRESS: P.O. BOX 440 TUPELO, MS 38802

DESIGN ARCHITECT
Hanbury Evans Wright Vlattas + Company
120 Atlantic Street
Norfolk, VA 23510
757.321.9600
www.hewv.com

PROJECT TITLE
USM - CENTURY PARK SOUTH
IHL# 208-297
HATTIESBURG, MISSISSIPPI

THE UNIVERSITY OF SOUTHERN MISSISSIPPI

PROJECT NO: 2012020
DRAWN BY: MPS
CHECKED BY: JPH
DATE ISSUED: 04 MAR 2013

REVISIONS & ADDENDUMS

SHEET TITLE
EXTERIOR / STAIR / HEALTH CLINIC/LUCKYDAY DOOR DETAILS

SHEET NUMBER
A007

3/11/2013 4:42:55 AM

Plot Date: BID DOCUMENTS - 04 MARCH 2013

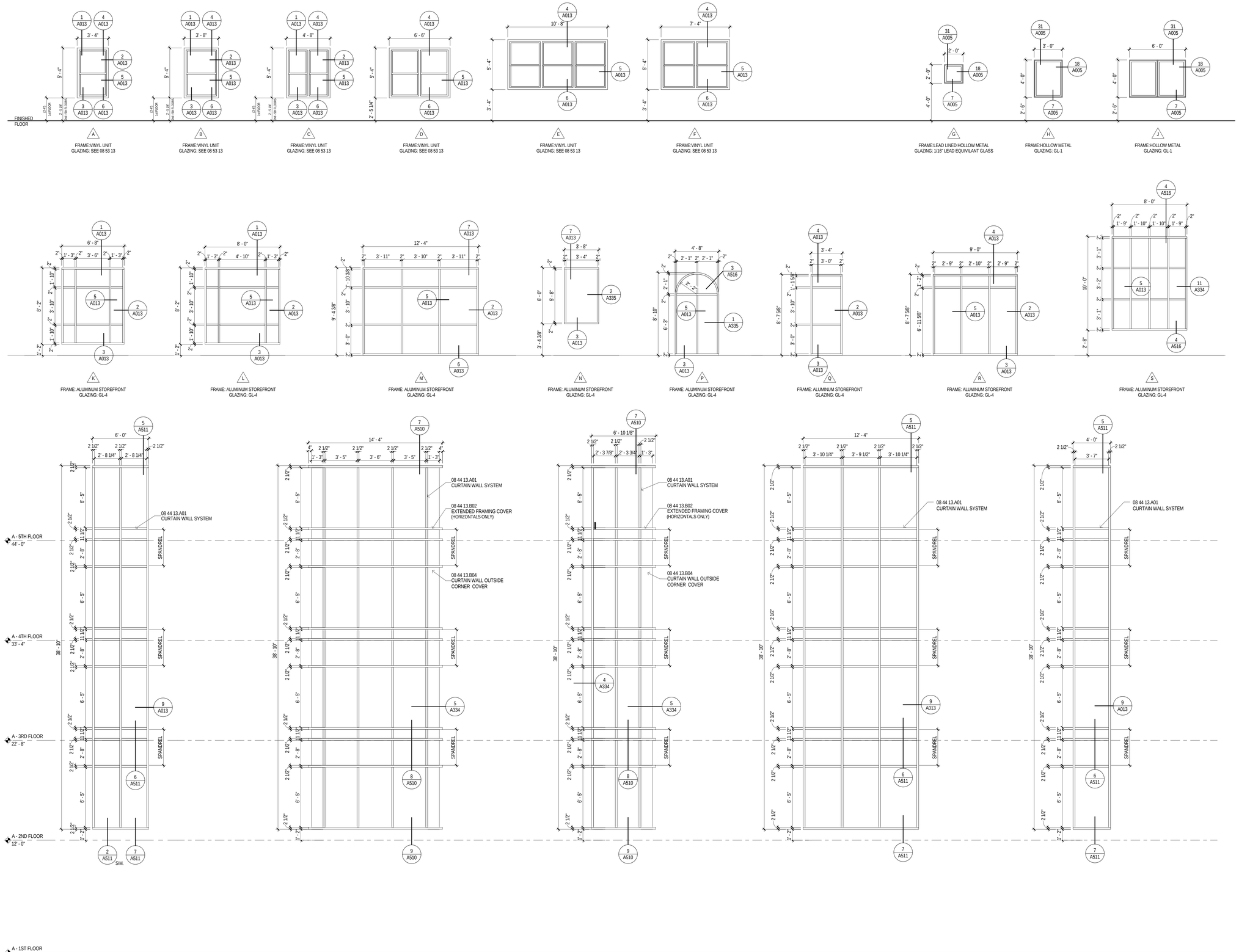

1 WINDOW TYPES
1/4" = 1'-0"

MATERIAL KEYING

08 44 13.A01	CURTAIN WALL SYSTEM
08 44 13.B02	EXTENDED FRAMING COVER
08 44 13.B04	CURTAIN WALL OUTSIDE CORNER COVER

GENERAL NOTES

A INTERIOR DOOR FRAMES SHALL BE STANDARD WELDED HOLLOW METAL FRAMES UNLESS OTHERWISE NOTED.
B ALL HOLLOW METAL DOOR FRAMES SHALL BE PAINTED.
C PROVIDE SEALANT AT PERIMETER OF BOTH SIDES OF DOOR FRAMES.
D ALL WOOD BLOCKING SHALL BE FIRE RETARDANT TREATED, TYPICAL.
E REFER TO ENLARGED FLOOR PLANS OF STUDENT ROOMS, RESIDENT ASSISTANT ROOMS AND STAFF APARTMENTS FOR TYPICAL DOOR LOCATIONS.
F SILL DETAILS INDICATED THUS "*" DENOTES "SAME FINISH THROUGH OPENING."
G SEE DOOR SPECIFICATIONS FOR UNDERCUT CLEARANCE REQUIREMENTS.
H SEE SHEET A004 FOR EXTERIOR DOORS, STAIR DOORS, HEALTH CLINIC DOORS AND LUCKYDAY DOORS.
I SEE SHEET A005 FOR ALL RESIDENTIAL INTERIOR DOORS UNLESS OTHERWISE NOTED.
J SEE ELECTRICAL DRAWINGS AND HARDWARE SCHEDULE FOR DOOR ACCESS CONTROL AND OPERATOR REQUIREMENTS.
K CONTRACTOR TO CONFIRM EXACT EXTERIOR WINDOW AND DOOR OPENING SIZE, AS FRAME SIZES SHOWN ON WINDOW AND DOOR TYPE ELEVATIONS ARE NOMINAL AND DO NOT ACCOUNT FOR BLOCKING AND SHIMMING.

REGISTERED ARCHITECT
Jeffrey Paul Saunders
3669
Tupelo, MS
STATE OF MISSISSIPPI
04 March 2013

THE McCARTY COMPANY
DESIGN GROUP, P.A.
OFFICE ADDRESS: 533 WEST MAIN STREET TUPELO, MS 38804
MAILING ADDRESS: P.O. BOX 440 TUPELO, MS 38802
TELEPHONE: (662) 844-4400
FAX: (662) 844-0530

DESIGN ARCHITECT
Hanbury Evans Wright Vlattas + Company
120 Atlantic Street
Norfolk, VA 23510
757.321.9600
www.hewv.com

PROJECT TITLE
USM - CENTURY PARK SOUTH
IHL# 208-297
HATTIESBURG, MISSISSIPPI

THE UNIVERSITY OF SOUTHERN MISSISSIPPI

PROJECT NO: 2012020
DRAWN BY: JCF
CHECKED BY: JPH
DATE ISSUED: 04 MAR 2013

REVISIONS & ADDENDUMS

SHEET TITLE
WINDOW TYPES

SHEET NUMBER
A011

3/11/2013 4:43:19 AM

Plot Date: BID DOCUMENTS - 04 MARCH 2013

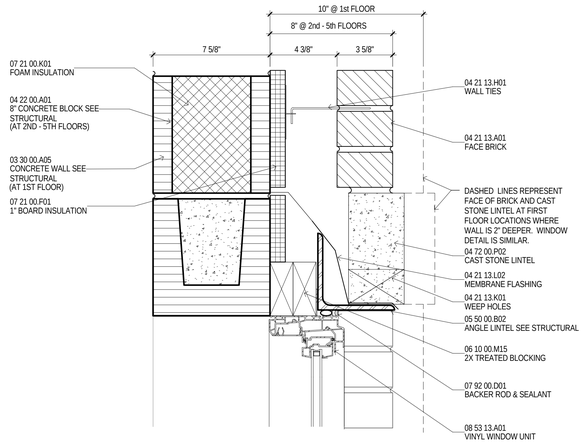

1 VINYL WINDOW HEAD AT CMU / CONCRETE WALL
3" = 1'-0"

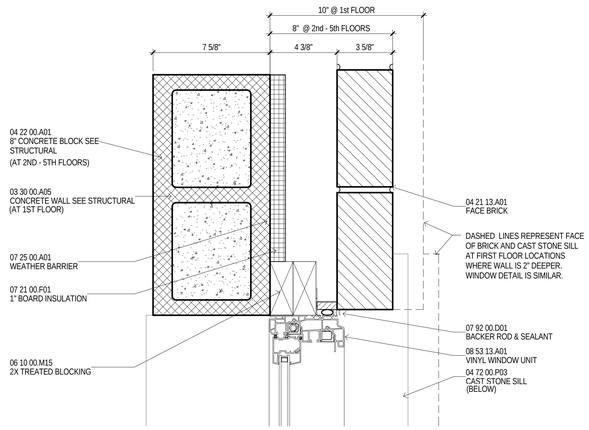

2 VINYL WINDOW JAMB AT CMU / CONCRETE WALL
3" = 1'-0"

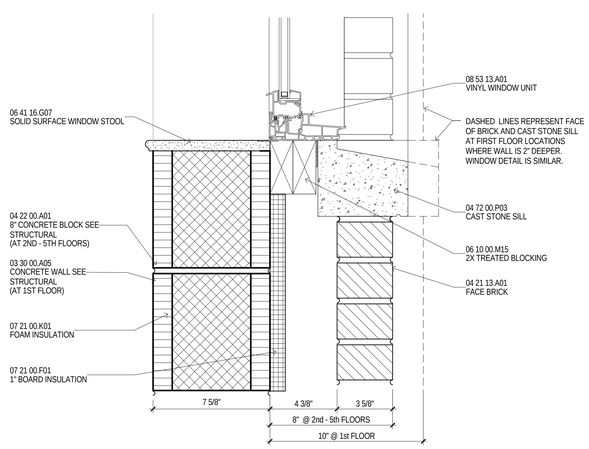

3 VINYL WINDOW SILL AT CMU / CONCRETE WALL
3" = 1'-0"

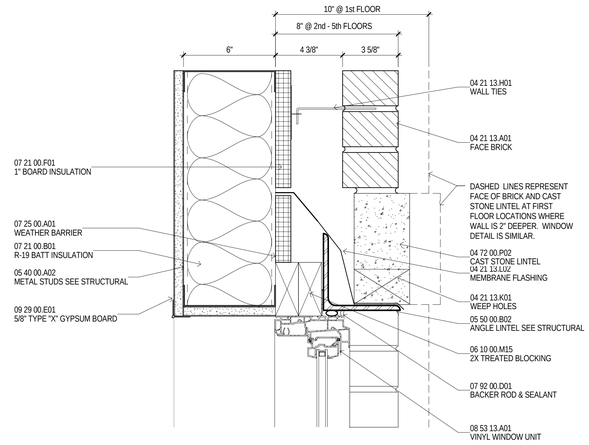

4 VINYL WINDOW HEAD AT STUD WALL
3" = 1'-0"

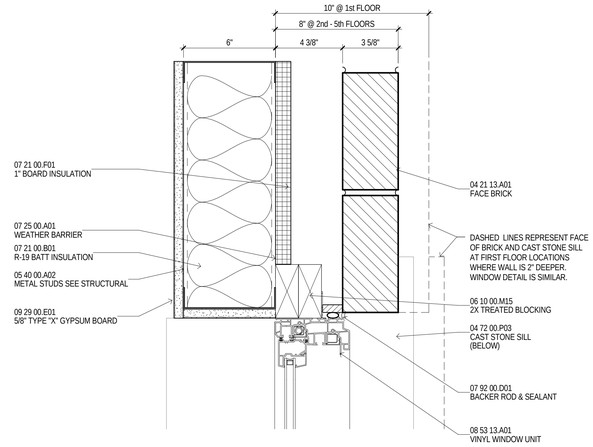

5 VINYL WINDOW JAMB AT STUD WALL
3" = 1'-0"

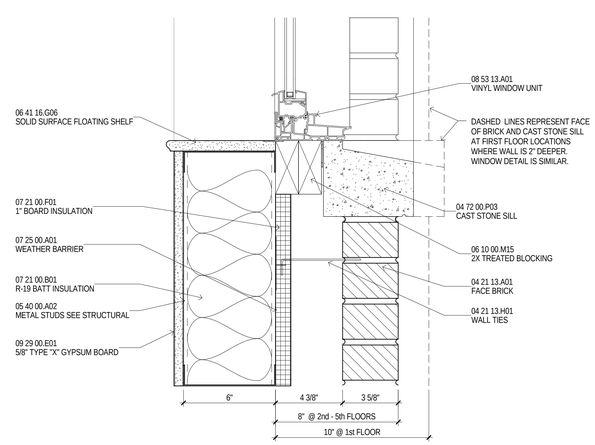

6 VINYL WINDOW SILL AT STUD WALL
3" = 1'-0"

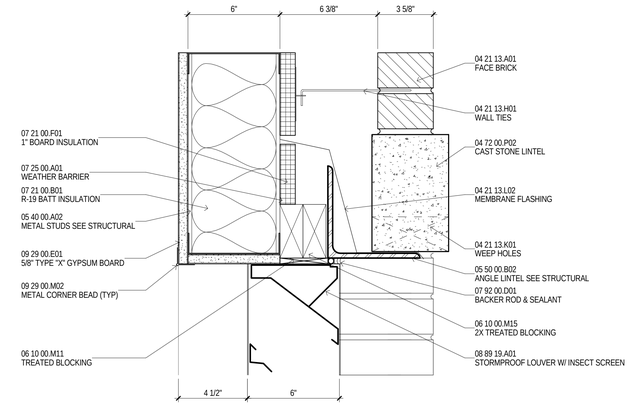

7 LOUVER HEAD AT STUD WALL
3" = 1'-0"

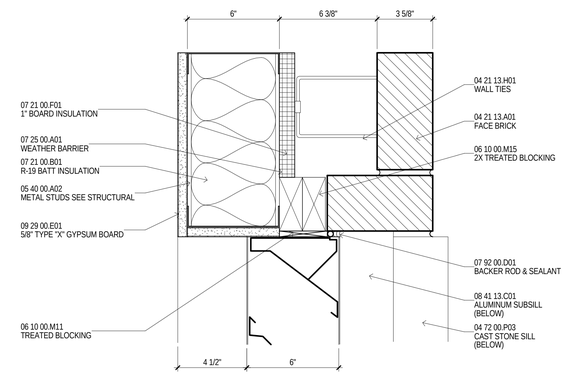

8 LOUVER JAMB AT STUD WALL
3" = 1'-0"

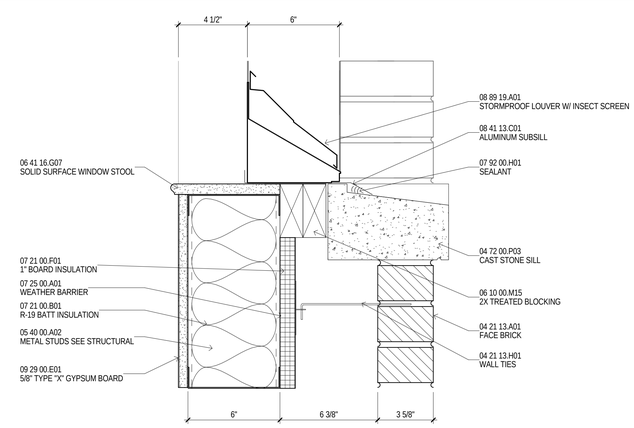

9 LOUVER SILL AT STUD WALL
3" = 1'-0"

MATERIAL KEYING

03 30 00.A05	CONCRETE WALL SEE STRUCTURAL
04 21 13.A01	FACE BRICK
04 21 13.H01	WALL TIES
04 21 13.K01	WEEP HOLES
04 21 13.L02	MEMBRANE FLASHING
04 22 00.A01	8" CONCRETE BLOCK SEE STRUCTURAL
04 72 00.P02	CAST STONE LINTEL
04 72 00.P03	CAST STONE SILL
05 40 00.A02	METAL STUDS SEE STRUCTURAL
05 50 00.B02	ANGLE LINTEL SEE STRUCTURAL
06 10 00.M11	TREATED BLOCKING
06 10 00.M15	2X TREATED BLOCKING
06 41 16.G06	SOLID SURFACE FLOATING SHELF
06 41 16.G07	SOLID SURFACE WINDOW STOOL
07 21 00.B01	R-19 BATT INSULATION
07 21 00.F01	1" BOARD INSULATION
07 21 00.K01	FOAM INSULATION
07 25 00.A01	WEATHER BARRIER
07 92 00.D01	BACKER ROD & SEALANT
07 92 00.H01	SEALANT
08 41 13.C01	ALUMINUM SUBSILL
08 53 13.A01	VINYL WINDOW UNIT
08 89 19.A01	STORMPROOF LOUVER W/ INSECT SCREEN
09 29 00.E01	5/8" TYPE "X" GYPSUM BOARD
09 29 00.M02	METAL CORNER BEAD (TYP)

REGISTERED ARCHITECT
Thomas Maunders Jones
3982
Tupelo, MS
STATE OF MISSISSIPPI
04 MARCH 2013

THE McCARTY COMPANY
DESIGN GROUP, P.A.
TELEPHONE: (662) 844-4400
FAX: (662) 844-0520
OFFICE ADDRESS: 533 WEST MAIN STREET TUPELO, MS 38804
MAILING ADDRESS: P.O. BOX 440 TUPELO, MS 38802

DESIGN ARCHITECT
Hanbury Evans Wright Vlattas + Company
120 Atlantic Street
Norfolk, VA 23510
757.321.9600
www.hewv.com

PROJECT TITLE
USM - CENTURY PARK SOUTH
IHL# 208-297
HATTIESBURG, MISSISSIPPI

THE UNIVERSITY OF SOUTHERN MISSISSIPPI

PROJECT NO: 2012020
DRAWN BY: MPS
CHECKED BY: JPH
DATE ISSUED: 04 MAR 2013

REVISIONS & ADDENDUMS

SHEET TITLE
WINDOW DETAILS

SHEET NUMBER
A012
81 of 458

3/11/2013 4:43:29 AM

Plot Date: BID DOCUMENTS - 04 MARCH 2013

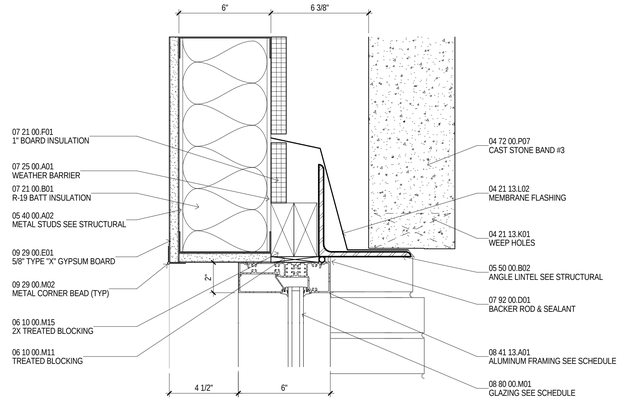

1 STOREFRONT HEAD WITH CAST STONE BAND
3" = 1'-0"

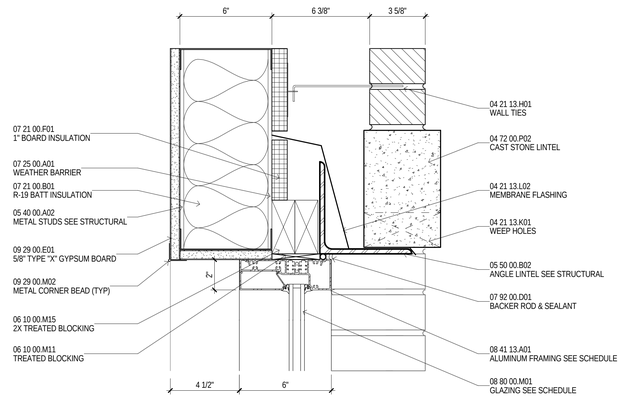

4 STOREFRONT HEAD WITH LINTEL
3" = 1'-0"

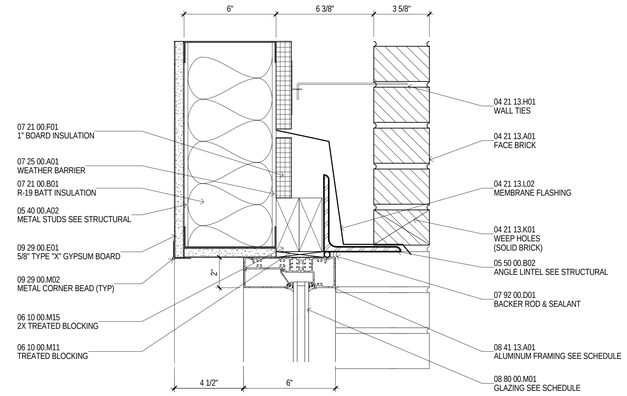

7 STOREFRONT HEAD WITH BRICK
3" = 1'-0"

MATERIAL KEYING

03 30 00.A03	CONCRETE SLAB SEE STRUCTURAL
04 21 13.A01	FACE BRICK
04 21 13.B02	ROLOK
04 21 13.H01	WALL TIES
04 21 13.K01	WEEP HOLES
04 21 13.L02	MEMBRANE FLASHING
04 72 00.P02	CAST STONE LINTEL
04 72 00.P03	CAST STONE SILL
04 72 00.P07	CAST STONE BAND #3
05 40 00.A02	METAL STUDS SEE STRUCTURAL
05 50 00.B02	ANGLE LINTEL SEE STRUCTURAL
06 10 00.M11	TREATED BLOCKING
06 10 00.M15	2X TREATED BLOCKING
06 41 16.G07	SOLID SURFACE WINDOW STOOL
07 21 00.B01	R-19 BATT INSULATION
07 21 00.F01	1" BOARD INSULATION
07 25 00.A01	WEATHER BARRIER
07 92 00.D01	BACKER ROD & SEALANT
08 41 13.A01	ALUMINUM FRAMING SEE SCHEDULE
08 41 13.A02	CURTAIN WALL SYSTEM
08 80 00.M01	GLAZING SEE SCHEDULE
09 29 00.E01	5/8" TYPE "X" GYPSUM BOARD
09 29 00.M02	METAL CORNER BEAD (TYP)
32 16 13.B02	4" CONCRETE WALK W/ BROOM FINISH
32 16 13.J08	1/2" PRE-MOLDED E.J. FILLER & SEALANT

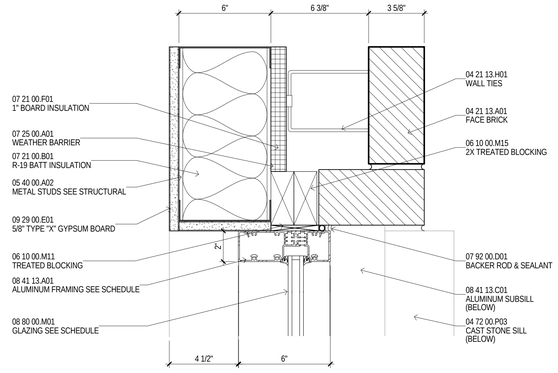

2 STOREFRONT JAMB AT FIRST FLOOR
3" = 1'-0"

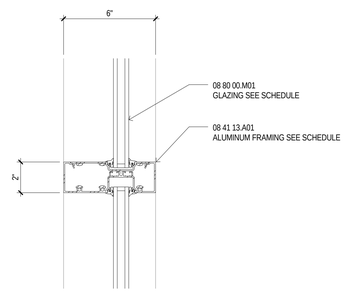

5 STOREFRONT VERTICAL MULLION
3" = 1'-0"

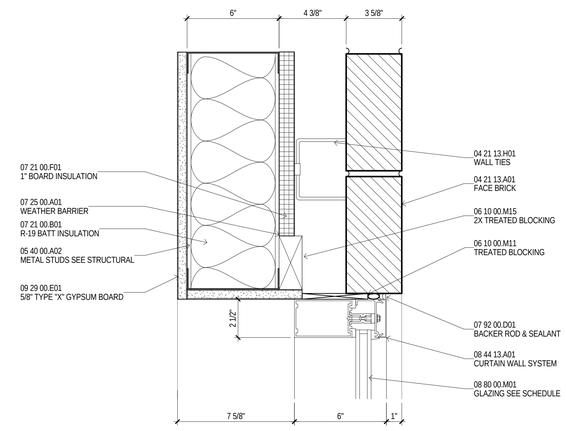

9 CURTAINWALL JAMB AT UPPER FLOORS
3" = 1'-0"

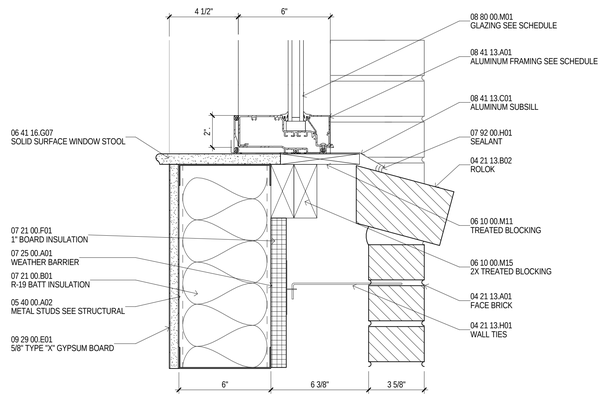

3 STOREFRONT SILL WITH ROLOCK
3" = 1'-0"

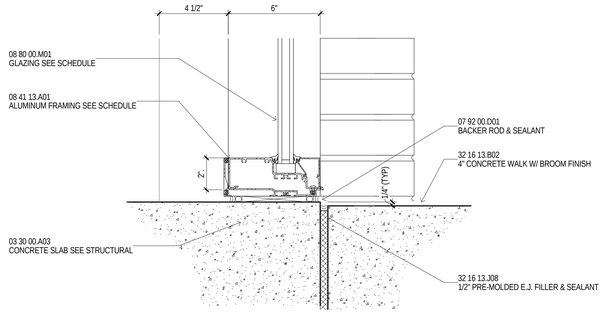

6 STOREFRONTSILL AT FINISH FLOOR
3" = 1'-0"

REGISTERED ARCHITECT
Thomas Mc Saunders
3462
Tupelo, MS
STATE OF MISSISSIPPI
04 MARCH 2013

THE McCARTY COMPANY
DESIGN GROUP, P.A.
TELEPHONE: (662) 844-4400
FAX: (662) 844-0520
OFFICE ADDRESS: 533 WEST MAIN STREET TUPELO, MS 38804
MAILING ADDRESS: P.O. BOX 440 TUPELO, MS 38802

DESIGN ARCHITECT
Hanbury Evans Wright Vlattas + Company
120 Atlantic Street
Norfolk, VA 23510
757.321.9600
www.hewv.com

PROJECT TITLE
USM - CENTURY PARK SOUTH
IHL# 208-297
HATTIESBURG, MISSISSIPPI

THE UNIVERSITY OF SOUTHERN MISSISSIPPI

PROJECT NO: 2012020
DRAWN BY: MPS
CHECKED BY: JPH
DATE ISSUED: 04 MAR 2013

REVISIONS & ADDENDUMS

SHEET TITLE
WINDOW DETAILS

SHEET NUMBER
A013
82 of 458

3/11/2013 4:43:42 AM

Plot Date: BID DOCUMENTS - 04 MARCH 2013

RESIDENTIAL FINISH SCHEDULE

Finish Type Key	Room Name	Floor Finish	Code Floor	Base Finish	Code Base	Wall Finish	Code Wall	Ceiling Finish	Code Ceiling	Comments
	MECHANICAL PLATFORM	CONCRETE		RUBBER		GWB		EXPOSED		
F1	DOUBLE	VINYL	V-2	RUBBER	B-1	GWB	PT-1	EXPOSED/GWB	PT-8/PT-1	
F1	DOUBLE (C)	VINYL	V-2	RUBBER	B-1	GWB	PT-1	EXPOSED/GWB	PT-8/PT-1	
F2	DOUBLE (HC-T-C)	VINYL	V-2	RUBBER	B-1	GWB	PT-1	EXPOSED/GWB	PT-8/PT-1	
F3	HC DOUBLE (HC-R)	VINYL	V-2	RUBBER	B-1	GWB	PT-1	EXPOSED/GWB	PT-8/PT-1	
F3	HC DOUBLE (HC-R-C)	VINYL	V-2	RUBBER	B-1	GWB	PT-1	EXPOSED/GWB	PT-8/PT-1	
F4	HC DOUBLE (HC-T)	VINYL	V-2	RUBBER	B-1	GWB	PT-1	EXPOSED/GWB	PT-8/PT-1	
F4	HC DOUBLE (HC-T-C)	VINYL	V-2	RUBBER	B-1	GWB	PT-1	EXPOSED/GWB	PT-8/PT-1	
F5	HC SINGLE (HC-R)	VINYL	V-2	RUBBER	B-1	GWB	PT-1	EXPOSED/GWB	PT-8/PT-1	
F5	HC SINGLE (HC-R-C)	VINYL	V-2	RUBBER	B-1	GWB	PT-1	EXPOSED/GWB	PT-8/PT-1	
F6	HC STAFF APT (HC-T)	VINYL	V-2	RUBBER	B-1	GWB	PT-1	GWB	PT-1	
F7	SINGLE	VINYL	V-2	RUBBER	B-1	GWB	PT-1	EXPOSED/GWB	PT-8/PT-1	
F7	SINGLE (C)	VINYL	V-2	RUBBER	B-1	GWB	PT-1	EXPOSED/GWB	PT-8/PT-1	
F8	SINGLE RA	VINYL	V-2	RUBBER	B-1	GWB	PT-1	EXPOSED/GWB	PT-8/PT-1	
F8	SINGLE RA (C)	VINYL	V-2	RUBBER	B-1	GWB	PT-1	EXPOSED/GWB	PT-8/PT-1	
F9	STAFF APT	VINYL	V-2	RUBBER	B-1	GWB	PT-1	GWB	PT-1	
F9	STAFF APT (C)	VINYL	V-2	RUBBER	B-1	GWB	PT-1	GWB	PT-1	
F10	BEDROOM	CARPET	CPT-1	RUBBER	B-1	GWB	PT-1	GWB	PT-1	
F11	BATH	TILE	CT-1	TILE	B-3	GWB	PT-1	GWB	PT-1	
F12	HC TOILET (HC-R)	TILE	CT-1	TILE	B-3	GWB	PT-1	GWB	PT-1	
F13	TOILET	TILE	CT-1	TILE	B-3	GWB	PT-1	GWB	PT-1	
F14	HC TOILET (HC-R)	TILE	CT-1	TILE	B-3	GWB	PT-5	GWB	PT-1	FRP-1 ALL WALLS - 4'-0" AFF (REF 7/A621)
F15	TOILET	TILE	CT-1	TILE	B-3	GWB	PT-5	GWB	PT-1	FRP-1 ALL WALLS - 4'-0" AFF (REF 7/A621)
F16	COAT	VINYL	V-2	RUBBER	B-1	GWB	PT-1	EXPOSED	PT-1	
F17	VESTIBULE	CONCRETE	CONC-1	RUBBER	B-1	GWB	PT-1	EXPOSED	PT-1B	
F18	LOBBY	TILE	CT-2	TILE	B-2	GWB	PT-1,3	ACT/GWB	ACT-1/PT-1	
F20	KITCHEN	VINYL	V-1	RUBBER	B-1	GWB	PT-1,5	GWB	PT-1	PT-1 WING WALLS AND SOFFITS
F21	VENDING	TILE	CT-2	TILE	B-2	GWB	PT-1	GWB	PT-1	
F22	VENDING	TILE	CT-2	TILE	B-2	GWB	PT-1	PLAM	PLAM-1	
F23	VENDING	TILE	CT-2	TILE	B-2	GWB	PT-1	ACT	ACT-1	
F24	LIVING ROOM	TILE/CARPET	CT-2/CPT-2	TILE	B-2	GWB	PT-1	ACT/GWB	ACT-2/PT-1	
F25	LOUNGE	CARPET	CPT-1	RUBBER	B-1	GWB	PT-1,5,6	ACT	ACT-2	
F26	LOUNGE	CARPET	CPT-1	RUBBER	B-1	GWB	PT-1,5,6	ACT/PLAM	ACT-2/PLAM-1	
F27	LOUNGE	CARPET	CPT-1	RUBBER	B-1	GWB	PT-1,5,6	ACT/GWB	ACT-2/PT-1	
F29	STUDY	CARPET	CPT-1	RUBBER	B-1	GWB	PT-1	GWB	PT-1	
F30	CORRIDOR	TILE/CARPET	CT-2/CPT-1	RUBBER	B-4	GWB	PT-1	ACT/GWB	ACT-1/PT-1	REF PLANS FOR EXTENT OF FLOOR FINISHES
F31	ELEV CORRIDOR	TILE	CT-2	TILE	B-2	GWB	PT-1,3	GWB	PT-1	
F32	STOR	CARPET	CPT-2	RUBBER	B-1	GWB	PT-1	ACT	ACT-1	
F33	DESK	CARPET	CPT-2	RUBBER	B-1	GWB	PT-1,4	PLAM	PLAM-1	
F34	OFFICE	CARPET	CPT-1	RUBBER	B-1	GWB	PT-1	ACT	ACT-1	
F35	ELEV CORRIDOR	TILE	CT-2	TILE	B-2	GWB	PT-1,3	GWB/ACT/PLAM	PT-1/ACT-1/PLAM-1	
F36	LAUNDRY	TILE	CT-2	TILE	B-2	GWB	PT-1,6	ACT	ACT-1	
F37	STOR	CONCRETE	CONC-1	RUBBER	B-1	GWB	PT-1	EXPOSED	PT-1B	
F38	ACCESS CONTROL	CONCRETE	CONC-1	RUBBER	B-1	GWB/PLYWD	PT-1	EXPOSED	PT-1B	PLYWD BACKER OVER GWB
F39	DATA	CONCRETE	CONC-1	RUBBER	B-1	GWB/PLYWD	PT-1	EXPOSED	PT-1B	PLYWD BACKER OVER GWB
F40	ELEC	CONCRETE	CONC-1	RUBBER	B-1	GWB	PT-1	EXPOSED	PT-1B	
F41	HK	CONCRETE	CONC-1	RUBBER	B-1	GWB	PT-1	GWB	PT-1B	
F42	MECH	CONCRETE	CONC-1	RUBBER	B-1	GWB	PT-1	EXPOSED	PT-1B	
F43	MECHANICAL PLATFORM	CONCRETE	CONC-1	RUBBER	B-1	GWB	PT-1	EXPOSED	PT-1B	
F44	WATER HEATER	CONCRETE	CONC-1	RUBBER	B-1	GWB	PT-1	EXPOSED	PT-1B	
F45	STAIR A1	CONCRETE	CONC-1	RUBBER	B-1	CMU/CONC FINISH COAT	PT-1,5	EXPOSED	PT-1B	UNDERSIDE OF LANDING/STAIR EXPOSED, GWB CEILING AT 5TH FLOOR. PT-7 AS INTERMEDIATE COAT
F46	STAIR A2	CONCRETE	CONC-1	RUBBER	B-1	CMU/CONC FINISH COAT	PT-1,5	EXPOSED	PT-1B	UNDERSIDE OF LANDINGS/STAIR EXPOSED, GWB CEILING AT 5TH FLOOR. PT-7 AS INTERMEDIATE COAT
F47	STAIR A3	CONCRETE	CONC-1	RUBBER	B-1	CMU/CONC FINISH COAT	PT-1,5	EXPOSED	PT-1B	UNDERSIDE OF LANDINGS/STAIR EXPOSED, GWB CEILING AT 5TH FLOOR. PT-7 AS INTERMEDIATE COAT
F49	STAIR B1	CONCRETE	CONC-1	RUBBER	B-1	CMU/CONC FINISH COAT	PT-1,5	EXPOSED	PT-1B	UNDERSIDE OF LANDING/STAIR EXPOSED, GWB CEILING AT 5TH FLOOR. PT-7 AS INTERMEDIATE COAT
F50	STAIR B2	CONCRETE	CONC-1	RUBBER	B-1	CMU/CONC FINISH COAT	PT-1,5	EXPOSED	PT-1B	UNDERSIDE OF LANDING/STAIR EXPOSED, GWB CEILING AT 5TH FLOOR. PT-7 AS INTERMEDIATE COAT
F51	STAIR B3	CONCRETE	CONC-1	RUBBER	B-1	CMU/CONC FINISH COAT	PT-1,5	EXPOSED	PT-1B	UNDERSIDE OF LANDING/STAIR EXPOSED, GWB CEILING AT 5TH FLOOR. PT-7 AS INTERMEDIATE COAT
F52	STAIR B4	CONCRETE	CONC-1	RUBBER	B-1	CMU/CONC FINISH COAT	PT-1,5	EXPOSED	PT-1B	UNDERSIDE OF LANDING/STAIR EXPOSED, GWB CEILING AT 5TH FLOOR. PT-7 AS INTERMEDIATE COAT
F53	STAIR C1	CONCRETE	CONC-1	RUBBER	B-1	CMU/CONC FINISH COAT	PT-1,5	EXPOSED	PT-1B	UNDERSIDE OF LANDING/STAIR EXPOSED, GWB CEILING AT 5TH FLOOR. PT-7 AS INTERMEDIATE COAT
F54	STAIR C2	CONCRETE	CONC-1	RUBBER	B-1	CMU/CONC FINISH COAT	PT-1,5	EXPOSED	PT-1B	UNDERSIDE OF LANDING/STAIR EXPOSED, GWB CEILING AT 5TH FLOOR. PT-7 AS INTERMEDIATE COAT
F55	ELEVATOR	TILE	CT-2	--	--	--	--	ACT	ACT-2	
F56	TRASH/ RECYCLING	CONCRETE	CONC-1	RUBBER	B-1	GWB	PT-1	GWB	PT-1	

FINISH LEGEND

ACOUSTIC CEILING

- ACT-1 — MANUFACTURER: ARMSTRONG
  PRODUCT: ULTIMA HIGH WASHABILITY
  ITEM NO: 1938
  SIZE: 2 X 2
  GRID: 15/16 PRELUDE
- ACT-2 — MANUFACTURER: ARMSTRONG
  PRODUCT: ULTIMA TEGULAR FINE
  TEXTURE 1912
  SIZE: 2 X 2
  GRID: 9/16" SUPRAFINE

CARPET

- CPT-1 — MANUFACTURER: PATCRAFT
  PRODUCT: INTRINSIC
  COLOR: 00173 BEACH HOUSE
  INSTALLATION: MONOLITHIC
- CPT-2 — MANUFACTURER: SHAW CONTRACT
  PRODUCT: STITCH
  COLOR: MODERN CROCHET
  INSTALLATION: BOUND AREA RUG
- CPT-3 — MANUFACTURER: BIGELOW
  PRODUCT: SOLVE
  COLOR: 7975 COGNITION GREY
  INSTALLATION: TILE - MONOLITHIC
- CPT-4 — MANUFACTURER: SHAW CONTRACT
  PRODUCT: 59550 SITE LINES
  COLOR: 38755 NATURAL CLAY
  INSTALLATION: TILE - ASHLAR
- CPT-5 — MANUFACTURER: SHAW CONTRACT
  PRODUCT: HOMAGE
  PATTERNS: (1) CRAFT 59571, (2) EMBELLISH 59573, (3) BLOCK PRINT 59572
  COLOR: (1) ENGRAVED 71761, (2) ENGRAVED METAL 71762, (3) ENGRAVED 71761
  INSTALLATION: TILE - (1) ASHLAR, (2) QUARTER-TURN, (3) MONOLITHIC

CONCRETE

- CONC-1 — BY CONTRACTOR
  SEALED CONCRETE

FIBERGLASS PANEL

- FRP-1 — MANUFACTURER: MARLITE
  PRODUCT: STANDARD FRP
  TYPE: SMOOTH SURFACE
  COLOR: S100 S/2S WHITE
  SIZE: 4' X 10' X 3/32"

PAINT

- PT-1A — MANUFACTURER: SHERWIN WILLIAMS
  COLOR: SW6119 ANTIQUE WHITE
  FINISH: EGG SHELL
- PT-1B — MANUFACTURER: SHERWIN WILLIAMS
  COLOR: SW 6119 ANTIQUE WHITE
  FINISH: ACRYLIC
- PT-2 — MANUFACTURER: SHERWIN WILLIAMS
  COLOR: SW 6120 BELIEVABLE BUFF
  FINISH: EGG SHELL
- PT-3 — MANUFACTURER: SHERWIN WILLIAMS
  COLOR: SW 6122 CAMELBACK
  FINISH: EGG SHELL
- PT-4 — MANUFACTURER: SHERWIN WILLIAMS
  COLOR: SW 7550 RESORT TAN
  FINISH: EGG SHELL
- PT-5 — MANUFACTURER: SHERWIN WILLIAMS
  COLOR: SW 0066 CASCADE GREEN
  FINISH: EGG SHELL
- PT-6 — MANUFACTURER: SHERWIN WILLIAMS
  COLOR: SW 0047 STUDIO BLUE GREEN
  FINISH: EGG SHELL
- PT-7 — MANUFACTURER: SHERWIN WILLIAMS
  TYPE: SW ULTRACRETE TEXTURE
  COATING APPLIED AS INTERMEDIATE
  COAT UNDER THE FINAL LATEX TOPCOAT

PAINT

- PT-8 — MANUFACTURER: COAT OF SILENCE
  ACOUSTICAL PAINT PRODUCTS,
  REF. SPECS
- PT-9 — MANUFACTURER: SHERWIN WILLIAMS
  COLOR: SW 6341 RED CENT
  FINISH: EGG SHELL

PLASTIC LAMINATE

- PLAM-1 — MANUFACTURER: WILSON ART
  COLOR: MONTANA WALNUT 7110K-78
- PLAM-2 — MANUFACTURER: FORMICA
  COLOR: CHOCOLATE WARP 5881-58
  EDGE BAND: CHARTER IND. - SLATE GREY WD91
- PLAM-3 — MANUFACTURER: WILSONART
  COLOR: 5TH AVE. ELM 7966K-12
  EDGE BAND: CHARTER IND. - PEPPERDUST WD327
- PLAM-4 — MANUFACTURER: WILSONART
  COLOR: SATIN STAINLESS 4830K-18
- PLAM-5 — MANUFACTURER: FORMICA
  COLOR: CITADEL WARP 5882-58
  EDGE BAND: CHARTER IND. - NORTHSEA WD90

RESILIENT

- V-1 — MANUFACTURER: CENTIVA
  PRODUCT: EVENT SERIES
  TYPE: WOOD PLANK
  COLOR: WPGW38-E
  SIZE: 6" WIDTH
- V-1 ALT 1 — MANUFACTURER: CARPET ONE
  PRODUCT: INVINCIBLE LVT PLANK
  TYPE: CLICK SYSTEM
  COLOR: SHILOH 745
  SIZE: 7" WIDTH

RESILIENT

- V-2 — MANUFACTURER: SHAW CONTRACT
  PRODUCT: NATIVE ORIGINS
  COLOR: 00722 HAND HEWN FIGURED WALNUT
  SIZE: 6" WIDTH
- V-3 — MANUFACTURER: CENTIVA
  PRODUCT: EVENT SERIES
  COLOR: AMERICAN CHERRY WP 3305-E
  SIZE: 6" WIDTH
- V-4 — MANUFACTURER: CENTIVA
  PRODUCT: EVENT SERIES
  COLOR: NUTMEG OLIVET WP OL07-E
  SIZE: 6" WIDTH
- SV-1 — MANUFACTURER: MANINGTON
  PRODUCT: PRIMUS FRAMEWORK SHEET VINYL
  COLOR: TOASTED SESAME - ALL107
- SV-2 — MANUFACTURER: MANINGTON
  PRODUCT: PRIMUS LACOSTA SHEET VINYL
  COLOR: STERLING BLUE ALL128

SOLID SURFACE

- SS-1 — MANUFACTURER: WILTCHER INDUSTRIES
  PRODUCT: TRANSOLID SOLID SURFACE
  COLOR: CAPE SANDS (65)
  THICKNESS: 1/2"
  NOSING: KNIFE EDGE
- SS-2 — MANUFACTURER: WILTCHER INDUSTRIES
  PRODUCT: TRANSOLID SOLID SURFACE
  COLOR: SHORE ROAD (79)
  THICKNESS: 1/2"
  NOSING: KNIFE EDGE
- SS-3 — MANUFACTURER: DUPONT
  PRODUCT: CORIAN
  COLOR: COTTAGE LANE
  THICKNESS: 1/2"
  NOSING: DOUBLE ROUND

SOLID SURF.

- SS-4 — MANUFACTURER: DUPONT
  PRODUCT: CORIAN - PRIVATE COLLECTION
  COLOR: SONORA
  THICKNESS: 1/2"
  NOSING: DOUBLE ROUND

TILE

- CT-1 — MANUFACTURER: DALTILE
  PRODUCT: CONTINENTAL SLATE
  COLOR: PERSIAN GOLD
  SIZE: 6" X 6"
  INSTALLATION PATTERN: GRID
  GROUT: TBD
- CT-2 — MANUFACTURER: DALTILE
  PRODUCT: CONTINENTAL SLATE
  COLOR: PERSIAN GOLD
  SIZE: 12" X 18"
  INSTALLATION PATTERN: RUNNING BOND
  GROUT: TBD
- CT-3 — MANUFACTURER: CROSSVILLE
  PRODUCT: AMERICANA SERIES
  COLOR: GOLD RUSH (UPS) AV112
  SIZE: 12" X 12" X 5/16"
  INSTALLATION PATTERN: GRID
  GROUT: MAPEI PALE UMBER 44
- CT-4 — MANUFACTURER: CROSSVILLE
  PRODUCT: CROSS-COLORS MINGLES
  COLOR: SAHARA DUNE A235 W/ ACCENT BAND OF BROWN TWEED A750
  SIZE: 12" X 12" X 5/16" (WALL TILE)
  INSTALLATION PATTERN: GRID
  GROUT: MAPEI STRAW 94
  NOTE: BULLNOSE TRIM AT TOP EDGE (COLOR A235)
- CT-5 — MANUFACTURER: WAUSAU TILE
  PRODUCT: PRECAST TERRAZZO UNIT STAIR TREAD, RISERS AND LANDINGS
  COLOR: ANALYTICAL TZ53 FINE
  SIZE: 16"X16" AT LANDINGS, REF. DRAWINGS FOR TREADS AND RISERS
  INSTALLATION PATTERN: GRID
  NOTE: BUTT-JOINT, NO GROUT

BASE

- B-1 — MANUFACTURER: JOHNSONITE
  PRODUCT: RUBBER BASE
  COLOR: ALMOND
  TYPE: COVE
  HEIGHT: 4"
- B-2 — MANUFACTURER: DALTILE
  PRODUCT: CONTINENTAL SLATE
  COLOR: PERSIAN GOLD
  SIZE: 6" X 12" COVE BASE
  INSTALLATION PATTERN: ALIGN WITH FLOOR TILE JOINTS
  GROUT: TBD
- B-3 — MANUFACTURER: WILTCHER INDUSTRIES
  PRODUCT: TRANSOLID SOLID SURFACE
  COLOR: SHORE ROAD (79)
  THICKNESS:
  SEE DRAWINGS FOR PROFILE
- B-4 — MANUFACTURER: JOHNSONITE
  PRODUCT: MILLWORK CONTOURED WALL BASE
  PROFILE: AMBASSADOR
  COLOR: ALMOND 034
  HEIGHT: 4"
- B-5 — MANUFACTURER: JOHNSONITE
  PRODUCT: RUBBER BASE
  COLOR: SANDLEWOOD 045
  TYPE: COVE
  HEIGHT: 4"
- B-6 — MANUFACTURER: CROSSVILLE
  PRODUCT: AMERICANA SERIES
  COLOR: GOLD RUSH (UPS) AV112
  SIZE: 6"X12" COVE BASE
  INSTALLATION PATTERN: ALIGN WITH FLOOR
  GROUT: MAPEI PALE UMBER 44
- B-7 — MANUFACTURER: WAUSAU TILE
  PRODUCT: PRECAST TERRAZZO COVE BASE
  COLOR: ANALYTICAL TZ53 FINE
  SIZE: 4" COVED WALL BASE WITH CHAMFERED TOP
  INSTALLATION PATTERN: ALIGN WITH FLOOR
  NOTE: BUTT-JOINT, NO GROUT

RESIDENTIAL FINISH SCHEDULE GENERAL NOTES

A. PROVIDE SAME FINISHES AS ADJACENT ROOM FOR ALL CLOSETS.

B. REFERENCE ARCHITECTURAL PLANS FOR ACCENT PAINT LOCATIONS.

C. REFERENCE REFLECTED CEILING PLANS FOR EXTENT OF GWB AND EXPOSED CEILING IN ALL STUDENT ROOMS.

D. REFERENCE INTERIOR ELEVATIONS FOR PLASTIC LAMINATE AND SOLID SURFACE LOCATIONS

E. INTERIOR HOLLOW METAL DOOR AND WINDOW FRAMES TO BE PAINTED WITH COLOR TO MATCH ADJACENT WALL, FINISH TO BE SEMI-GLOSS

F. MANUFACTURER'S NAMES LISTED IN THE INTERIOR FINISH SCHEDULES ARE FOR THE PURPOSE OF COLOR, TEXTURE, AND PATTERN SELECTION. PRODUCTS FROM OTHER MANUFACTURERS MAY BE ACCEPTABLE PROVIDED THAT THOSE COLORS, TEXTURES, AND PATTERNS CAN BE PROVIDED TO EXACTLY MATCH THE FINISH SAMPLES LISTED AND THOSE PRODUCTS MEET ALL OTHER REQUIREMENTS OF THE CONTRACT DOCUMENTS. COLOR SELECTIONS FOR VARIOUS MATERIALS ARE COMPLIMENTARY THEREFORE VARIATIONS IN THE COLORS, TEXTURES, AND PATTERNS SCHEDULED WILL NOT BE ACCEPTED.

G. ALL SPACES LABELED WITH EXPOSED CEILINGS TO HAVE PAINTED GWB (PT-1) ON 5TH FLOOR.

H. UNLESS OTHERWISE INDICATED FRP WAINSCOT TO BE PROVIDED IN ONE PIECE FULL PANEL WIDTH FOR EACH WALL OR PANEL- NO JOINTS.

I. CORNER GUARDS & WALL PROTECTION IN CORRIDORS AND ELEV CORRIDORS, TYP.

J. FRP-1 WAINSCOT WITH SOLID SURFACE BASE, TOP AND SIDE CAP ON TOILET WALL AND ADJACENT WALL FOR PUBLIC TOILETS AS SHOWN ON DRAWING 9/A606.

K. FRP-1 WAINSCOT AND MARLITE ANODIZED ALUMINUM EDGE TRIM "FS70" (TOP AND EXPOSED SIDES) FOR WET WALL ONLY IN STUDENT BATHS, TYP AS SHOWN ON DRAWING 4/A606.

L. FRP-1 WAINSCOT WITH SOLID SURFACE BASE AND TOP CAP ON ALL WALLS FOR BUILDING C "POD COMMUNITY" BATHS AS SHOWN ON DRAWING 6/A606.

MICHAEL EVANS 4283 STATE OF MISSISSIPPI
04-MAR-2013

THE McCARTY COMPANY
DESIGN GROUP, P.A.
OFFICE ADDRESS: 533 WEST MAIN STREET TUPELO, MS 38804
MAILING ADDRESS: P.O. BOX 440 TUPELO, MS 38802
TELEPHONE: (662) 844-4400
FAX: (662) 844-0503

DESIGN ARCHITECT
Hanbury Evans Wright Vlattas + Company
120 Atlantic Street
Norfolk, VA 23510
757.321.9600
www.hewv.com

PROJECT TITLE
USM - CENTURY PARK SOUTH
IHL# 208-297
HATTIESBURG, MISSISSIPPI

THE UNIVERSITY OF SOUTHERN MISSISSIPPI

PROJECT NO: 2012020
DRAWN BY: SLR
CHECKED BY: JTG
DATE ISSUED: 04 MAR 2013

REVISIONS & ADDENDUMS

SHEET TITLE
RESIDENTIAL FINISH SCHEDULE

SHEET NUMBER
A021

3/8/2013 1:34:17 PM

Plot Date: BID DOCUMENTS - 04 MARCH 2013

INTERIOR FINISH SCHEDULE - HEALTH CLINIC (BUILDING A)

Finish Type Key	Room Name	Number	Floor Finish	Code Floor	Base Finish	Code Base	Wall Finish	Code Wall	Ceiling Finish	Code Ceiling	Comments
F70	CORRIDOR	HC100	VINYL	V-3	RUBBER	B-4	GWB	SEE COMMENTS	ACT/GWB	ACT-2/SEE COMMENTS	PAINT SCHEDULE TO BE PROVIDED DURING CONSTRUCTION
F71	DIRECTOR	HC101	VINYL	V-3	RUBBER	B-5	GWB	PT-2/PT-5	ACT	ACT-2	PT-5 ON NORTH WALL
F72	COUNS.	HC102	CARPET	CPT-3	RUBBER	B-5	GWB	PT-2/PT-4	ACT	ACT-2	PT-4 ON SOUTH WALL
F73	HEALTH ED CONFERENCE	HC103	CARPET	CPT-3	RUBBER	B-5	GWB	PT-3	ACT	ACT-2	
F74	STOR	HC103A	CARPET	CPT-3	RUBBER	B-5	GWB	PT-3	ACT	ACT-2	
F75	HEALTH	HC104	CARPET	CPT-3	RUBBER	B-5	GWB	PT-2/PT-4	ACT	ACT-2	PT-4 ON SOUTH WALL
F76	TLT	HC105	TILE	T-3	TILE	B-6	GWB	PT-1	GWB	PT-1	
F77	HEALTH	HC106	CARPET	CPT-3	RUBBER	B-5	GWB	PT-2/PT-4	ACT	ACT-2	PT-4 ON SOUTH WALL
F78	BIO-H	HC107	CONCRETE	CONC-1	RUBBER	B-5	GWB	PT-1	GWB	PT-1	
F79	TRASH	HC108	CONCRETE	CONC-1	RUBBER	B-5	GWB	PT-1	GWB	PT-1	
F80	DELIVERY STORAGE	HC109	VINYL	V-3	RUBBER	B-5	GWB	PT-1	ACT	ACT-2	
F81	HOUSE KEEPING	HC110	CONCRETE	CONC-1	RUBBER	B-5	GWB	PT-1	GWB	PT-1	
F82	GRANT	HC111	CARPET	CPT-3	RUBBER	B-5	GWB	PT-2/PT-4	ACT	ACT-2	PT-4 ON SOUTH WALL
F83	ST. TLT	HC112	TILE	T-3	TILE	B-6	GWB/TILE	PT-1/T-4	GWB	PT-1	CERAMIC WALL TILE TO 7'-0" AFF, GWB ABOVE
F84	WORK	HC113	VINYL	V-3	RUBBER	B-5	GWB	PT-3	ACT	ACT-2	
F85	TELE-HEALTH	HC114	VINYL	V-3	RUBBER	B-5	GWB	PT-2/PT-5	ACT	ACT-2	PT-5 ON NORTH WALL
F86	HEALTH ADMIN.	HC115	VINYL	V-3	RUBBER	B-5	GWB	PT-2/PT-5	ACT	ACT-2	PT-5 ON NORTH WALL
F87	STAFF LOUNGE	HC116	VINYL	V-3	RUBBER	B-5	GWB	PT-3	ACT	ACT-2	
F88	MECH	HC117	CONCRETE	CONC-1	RUBBER	B-5	GWB	PT-1	EXPOSED	--	
F89	DATA	HC118	CONCRETE	CONC-1	RUBBER	B-5	GWB	PT-1	EXPOSED	--	PLYWOOD BACKER OVER GWB TO 8'-0" AFF, PAINT WALL COLOR
F90	ELEC	HC119	CONCRETE	CONC-1	RUBBER	B-5	GWB	PT-1	EXPOSED	--	
F91	INSURANCE	HC120	VINYL	V-3	RUBBER	B-5	GWB	PT-2/PT-5	ACT	ACT-2	PT-5 ON NORTH WALL
F92	RECEPTION	HC121	VINYL	V-3	RUBBER	B-5	GWB	SEE COMMENTS	ACT/GWB	ACT-2/SEE COMMENTS	PAINT SCHEDULE TO BE PROVIDED DURING CONSTRUCTION
F93	LAB	HC122	SHEET VINYL	SV-1	RUBBER	B-5	GWB	PT-2	ACT	ACT-1	
F94	LAB WAIT	HC123	SHEET VINYL	V-3	RUBBER	B-5	GWB	PT-3	ACT	ACT-2	
F95	PHLEB	HC124	SHEET VINYL	SV-1	RUBBER	B-5	GWB	PT-2	ACT	ACT-1	
F96	TLT	HC124A	TILE	T-3	TILE	B-6	GWB	PT-1	GWB	PT-1	
F99	NURSE MANAGER	HC125	VINYL	V-3	RUBBER	B-5	GWB	PT-2/PT-4	ACT	ACT-2	PT-4 ON SOUTH WALL
F100	SHOT / TRIAGE	HC126	SHEET VINYL	SV-1	RUBBER	B-5	GWB	PT-2/PT-3	ACT	ACT-1	PT-3 ON EAST WALL
F101	TLT	HC127	TILE	T-3	TILE	B-6	GWB	PT-1	GWB	PT-1	
F102	TLT	HC128	TILE	T-3	TILE	B-6	GWB	PT-1	GWB	PT-1	
F103	EXAM	HC129	SHEET VINYL	SV-1	RUBBER	B-5	GWB	PT-2/PT-3	ACT	ACT-1	PT-3 ON NORTH WALL
F104	EXAM	HC130	SHEET VINYL	SV-1	RUBBER	B-5	GWB	PT-2/PT-3	ACT	ACT-1	PT-3 ON NORTH WALL
F105	DOCTOR'S OFFICE	HC131	VINYL	V-3	RUBBER	B-5	GWB	PT-2/PT-5	ACT	ACT-2	PT-5 ON EAST WALL
F106	X-RAY	HC132	VINYL	V-3	RUBBER	B-5	GWB	PT-2	ACT	ACT-2	
F107	EXAM	HC133	SHEET VINYL	SV-1	RUBBER	B-5	GWB	PT-2/PT-3	ACT	ACT-1	PT-3 ON SOUTH WALL
F108	EXAM	HC134	SHEET VINYL	SV-1	RUBBER	B-5	GWB	PT-2/PT-3	ACT	ACT-1	PT-3 ON NORTH WALL
F109	EXAM	HC135	SHEET VINYL	SV-1	RUBBER	B-5	GWB	PT-2/PT-3	ACT	ACT-1	PT-3 ON SOUTH WALL
F110	SUPPLY	HC136	VINYL	V-3	RUBBER	B-5	GWB	PT-2/PT-5	ACT/GWB	ACT-2/PT-6	EXT. WALL PT-1, INT. WALL PT-5
F111	EXAM	HC137	SHEET VINYL	SV-1	RUBBER	B-5	GWB	PT-2/PT-3	ACT	ACT-1	PT-3 ON SOUTH WALL
F112	EXAM	HC138	SHEET VINYL	SV-1	RUBBER	B-5	GWB	PT-2/PT-3	ACT	ACT-1	PT-3 ON SOUTH WALL
F113	DOCTOR'S OFFICE	HC139	VINYL	V-3	RUBBER	B-5	GWB	PT-2/PT-5	ACT	ACT-2	PT-5 ON SOUTH WALL
F114	EXAM	HC140	SHEET VINYL	SV-1	RUBBER	B-5	GWB	PT-2/PT-3	ACT	ACT-1	PT-3 ON NORTH WALL
F115	EXAM	HC141	SHEET VINYL	SV-1	RUBBER	B-5	GWB	PT-2/PT-3	ACT	ACT-1	PT-3 ON NORTH WALL
F116	EXAM	HC142	SHEET VINYL	SV-1	RUBBER	B-5	GWB	PT-2/PT-3	ACT	ACT-1	PT-3 ON NORTH WALL
F117	STORAGE	HC143	VINYL	V-3	RUBBER	B-5	GWB	PT-1	ACT	ACT-2	
F118	DOCTOR'S OFFICE	HC144	VINYL	V-3	RUBBER	B-5	GWB	PT-2/PT-5	ACT	ACT-2	PT-5 ON EAST WALL
F119	TLT	HC145	TILE	T-3	TILE	B-6	GWB	PT-1	GWB	PT-1	
F120	EXAM	HC146	SHEET VINYL	SV-1	RUBBER	B-5	GWB	PT-2/PT-3	ACT	ACT-1	PT-3 ON EAST WALL
F121	DOCTOR'S OFFICE	HC147	VINYL	V-3	RUBBER	B-5	GWB	PT-1/PT-5	ACT	ACT-2	PT-5 ON EAST WALL
F122	PROCEDURE	HC148	SHEET VINYL	SV-1	RUBBER	B-5	GWB	PT-1	ACT	ACT-1	
F123	TLT	HC148A	TILE	T-3	TILE	B-6	GWB	PT-1	GWB	PT-1	
F124	EXAM	HC149	SHEET VINYL	SV-1	RUBBER	B-5	GWB	PT-2/PT-3	ACT	ACT-1	PT-3 ON SOUTH WALL
F125	EXAM	HC150	SHEET VINYL	SV-1	RUBBER	B-5	GWB	PT-2/PT-3	ACT	ACT-1	PT-3 ON SOUTH WALL
F126	EXAM	HC151	SHEET VINYL	SV-1	RUBBER	B-5	GWB	PT-2/PT-3	ACT	ACT-1	PT-3 ON SOUTH WALL
F127	EXAM (ISO)	HC152	SHEET VINYL	SV-1	RUBBER	B-5	GWB	PT-2/PT-3	GWB	PT-1	PT-3 ON SOUTH WALL
F128	SICK (10)	HC153	VINYL	V-1, V-3	RUBBER	B-4	GWB	PT-2	ACT	ACT-2	
F129	TLT	HC154	TILE	T-3	TILE	B-6	GWB	PT-1	GWB	PT-1	
F130	WAITING (25)	HC155	VINYL	V-1, V-3	RUBBER	B-4	GWB	SEE COMMENTS	ACT	ACT-2	PAINT SCHEDULE TO BE PROVIDED DURING CONSTRUCTION
F131	OTC	HC156	SHEET VINYL	SV-2	RUBBER	B-5	GWB	PT-1	ACT	ACT-2	
F132	PHARMACY	HC156A	SHEET VINYL	SV-2	RUBBER	B-5	GWB	PT-1	ACT	ACT-1	
F133	OFFICE	HC156B	VINYL	V-3	RUBBER	B-5	GWB	PT-2	ACT	ACT-2	
F134	OFFICE	HC156C	VINYL	V-3	RUBBER	B-5	GWB	PT-2	ACT	ACT-2	
F135	STOR	HC156D	SHEET VINYL	SV-2	RUBBER	B-5	GWB	PT-1	ACT	ACT-2	
F136	TLT	HC156E	TILE	T-3	TILE	B-6	GWB	PT-1	GWB	PT-1	
F137	STOR	HC156F	VINYL	V-3	RUBBER	B-5	GWB	PT-1	ACT	ACT-2	
F138	CORRIDOR	HC160	VINYL	V-3	RUBBER	B-4	GWB	PT-2	ACT	ACT-2	
F139	CORRIDOR	HC161	VINYL	V-3	RUBBER	B-4	GWB	PT-2	ACT	ACT-2	
F140	CORRIDOR	HC162	VINYL	V-3	RUBBER	B-4	GWB	PT-2	ACT	ACT-2	
F141	CORRIDOR	HC163	VINYL	V-3	RUBBER	B-4	GWB	PT-2	ACT	ACT-2	
F142	TLT	HC164	TILE	T-3	TILE	B-6	GWB	PT-1	GWB	PT-1	

FINISH LEGEND

Category	Code	Description
ACOUSTIC CEILING	ACT-1	MANUFACTURER: ARMSTRONG PRODUCT: ULTIMA HIGH WASHABILITY ITEM NO: 1938 SIZE: 2 X 2 GRID: 15/16 PRELUDE
ACOUSTIC CEILING	ACT-2	MANUFACTURER: ARMSTRONG PRODUCT: ULTIMA TEGULAR FINE TEXTURE 1912 SIZE: 2 X 2 GRID: 9/16" SUPRAFINE
CARPET	CPT-1	MANUFACTURER: PATCRAFT PRODUCT: INTRINSIC COLOR: 00173 BEACH HOUSE INSTALLATION: MONOLITHIC
CARPET	CPT-2	MANUFACTURER: SHAW CONTRACT PRODUCT: STITCH COLOR: MODERN CROCHET INSTALLATION: BOUND AREA RUG
CARPET	CPT-3	MANUFACTURER: BIGELOW PRODUCT: SOLVE COLOR: 7975 COGNITION GREY INSTALLATION: TILE - MONOLITHIC
CARPET	CPT-4	MANUFACTURER: SHAW CONTRACT PRODUCT: 59550 SITE LINES COLOR: 38755 NATURAL CLAY INSTALLATION: TILE - ASHLAR
CARPET	CPT-5	MANUFACTURER: SHAW CONTRACT PRODUCT: HOMAGE PATTERNS: (1) CRAFT 59571, (2) EMBELLISH 59573, (3) BLOCK PRINT 59572 COLOR: (1) ENGRAVED 71761, (2) ENGRAVED METAL 71762, (3) ENGRAVED 71761 INSTALLATION: TILE - (1) ASHLAR, (2) QUARTER-TURN, (3) MONOLITHIC
CONCRETE	CONC-1	BY CONTRACTOR SEALED CONCRETE
FIBERGLASS PANEL	FRP-1	MANUFACTURER: MARLITE PRODUCT: STANDARD FRP TYPE: SMOOTH SURFACE COLOR: S100 S/2/S WHITE SIZE: 4' X 10' X 3/32"
PAINT	PT-1A	MANUFACTURER: SHERWIN WILLIAMS COLOR: SW6119 ANTIQUE WHITE FINISH: EGG SHELL
PAINT	PT-1B	MANUFACTURER: SHERWIN WILLIAMS COLOR: SW 6119 ANTIQUE WHITE FINISH: SATIN
PAINT	PT-2	MANUFACTURER: SHERWIN WILLIAMS COLOR: SW 6120 BELIEVABLE BUFF FINISH: EGG SHELL
PAINT	PT-3	MANUFACTURER: SHERWIN WILLIAMS COLOR: SW 6122 CAMELBACK FINISH: EGG SHELL
PAINT	PT-4	MANUFACTURER: SHERWIN WILLIAMS COLOR: SW 7550 RESORT TAN FINISH: EGG SHELL
PAINT	PT-5	MANUFACTURER: SHERWIN WILLIAMS COLOR: SW 0066 CASCADE GREEN FINISH: EGG SHELL
PAINT	PT-6	MANUFACTURER: SHERWIN WILLIAMS COLOR: SW 0047 STUDIO BLUE GREEN FINISH: EGG SHELL
PAINT	PT-7	MANUFACTURER: SHERWIN WILLIAMS TYPE: SW ULTRACRETE TEXTURE COATING APPLIED AS INTERMEDIATE COAT UNDER THE FINAL LATEX TOPCOAT
PAINT	PT-8	MANUFACTURER: COAT OF SILENCE ACOUSTICAL PAINT PRODUCTS, REF. SPECS
PAINT	PT-9	MANUFACTURER: SHERWIN WILLIAMS COLOR: SW 6341 RED CENT FINISH: EGG SHELL
PLASTIC LAMINATE	PLAM-1	MANUFACTURER: WILSON ART COLOR: MONTANA WALNUT 7110K-78
PLASTIC LAMINATE	PLAM-2	MANUFACTURER: FORMICA COLOR: EARTHEN WARP 5880-58 EDGE BAND: CHARTER IND. - PTST606 TAUPE
PLASTIC LAMINATE	PLAM-3	MANUFACTURER: WILSONART COLOR: 5TH AVE. ELM 7966K-12 EDGE BAND: CHARTER IND. - PEPPERDUST WD327
PLASTIC LAMINATE	PLAM-4	MANUFACTURER: WILSONART COLOR: SATIN STAINLESS 4830K-18
PLASTIC LAMINATE	PLAM-5	MANUFACTURER: FORMICA COLOR: CITADEL WARP 5882-58 EDGE BAND: CHARTER IND. - NORTHSEA WD90
RESILIENT	V-1	MANUFACTURER: CENTIVA PRODUCT: EVENT SERIES TYPE: WOOD PLANK COLOR: WPGW38-E SIZE: 6" WIDTH
RESILIENT	V-1 ALT 1	MANUFACTURER: CARPET ONE PRODUCT: INVINCIBLE LVT PLANK TYPE: CLICK SYSTEM COLOR: SHILOH 745 SIZE: 7" WIDTH
RESILIENT	V-2	MANUFACTURER: SHAW CONTRACT PRODUCT: NATIVE ORIGINS COLOR: 00722 HAND HEWN FIGURED WALNUT SIZE: 6" WIDTH
RESILIENT	V-3	MANUFACTURER: CENTIVA PRODUCT: EVENT SERIES COLOR: AMERICAN CHERRY WP 3305-E SIZE: 6" WIDTH
RESILIENT	V-4	MANUFACTURER: CENTIVA PRODUCT: EVENT SERIES COLOR: NUTMEG OLIVET WP OL07-E SIZE: 6" WIDTH
RESILIENT	SV-1	MANUFACTURER: MANINGTON PRODUCT: PRIMUS FRAMEWORK SHEET VINYL COLOR: TOASTED SESAME - ALL107
RESILIENT	SV-2	MANUFACTURER: MANINGTON PRODUCT: PRIMUS LACOSTA SHEET VINYL COLOR: STERLING BLUE ALL128
SOLID SURFACE	SS-1	MANUFACTURER: WILTCHER INDUSTRIES PRODUCT: TRANSOLID SOLID SURFACE COLOR: CAPE SANDS (65) THICKNESS: 1/2" NOSING: KNIFE EDGE
SOLID SURFACE	SS-2	MANUFACTURER: WILTCHER INDUSTRIES PRODUCT: TRANSOLID SOLID SURFACE COLOR: SHORE ROAD (79) THICKNESS: 1/2" NOSING: KNIFE EDGE
SOLID SURFACE	SS-3	MANUFACTURER: DUPONT PRODUCT: CORIAN COLOR: COTTAGE LANE THICKNESS: 1/2" NOSING: DOUBLE ROUND
SOLID SURF.	SS-4	MANUFACTURER: DUPONT PRODUCT: CORIAN - PRIVATE COLLECTION COLOR: SONORA THICKNESS: 1/2" NOSING: DOUBLE ROUND
TILE	CT-1	MANUFACTURER: DALTILE PRODUCT: CONTINENTAL SLATE COLOR: PERSIAN GOLD SIZE: 6" X 6" INSTALLATION PATTERN: GRID GROUT: TBD
TILE	CT-2	MANUFACTURER: DALTILE PRODUCT: CONTINENTAL SLATE COLOR: PERSIAN GOLD SIZE: 12" X 18" INSTALLATION PATTERN: GRID GROUT: TBD
TILE	CT-3	MANUFACTURER: CROSSVILLE PRODUCT: AMERICANA SERIES COLOR: GOLD RUSH (UPS) AV112 SIZE: 12" X 12" X 5/16" INSTALLATION PATTERN: GRID GROUT: MAPEI PALE UMBER 44
TILE	CT-4	MANUFACTURER: CROSSVILLE PRODUCT: CROSS-COLORS MINGLES COLOR: SAHARA DUNE A235 W/ ACCENT BAND OF BROWN TWEED A750 SIZE: 12" X 12" X 5/16" (WALL TILE) INSTALLATION PATTERN: GRID GROUT: MAPEI STRAW 94 NOTE: BULLNOSE TRIM AT TOP EDGE (COLOR A235)
TILE	CT-5	MANUFACTURER: WAUSAU TILE PRODUCT: PRECAST TERRAZZO UNIT STAIR TREAD, RISERS AND LANDINGS COLOR: ANALYTICAL TZ53 FINE SIZE: 16"X16" AT LANDINGS, REF. DRAWINGS FOR TREADS AND RISERS INSTALLATION PATTERN: GRID NOTE: BUTT-JOINT, NO GROUT
BASE	B-1	MANUFACTURER: JOHNSONITE PRODUCT: RUBBER BASE COLOR: ALMOND TYPE: COVE HEIGHT: 4"
BASE	B-2	MANUFACTURER: DALTILE PRODUCT: CONTINENTAL SLATE COLOR: PERSIAN GOLD SIZE: 6" X 12" COVE BASE INSTALLATION PATTERN: ALIGN WITH FLOOR TILE JOINTS GROUT: TBD
BASE	B-3	MANUFACTURER: WILTCHER INDUSTRIES PRODUCT: TRANSOLID SOLID SURFACE COLOR: SHORE ROAD (79) THICKNESS: SEE DRAWINGS FOR PROFILE
BASE	B-4	MANUFACTURER: JOHNSONITE PRODUCT: MILLWORK CONTOURED WALL BASE PROFILE: AMBASSADOR COLOR: ALMOND 034 HEIGHT: 4"
BASE	B-5	MANUFACTURER: JOHNSONITE PRODUCT: RUBBER BASE COLOR: SANDLEWOOD 045 TYPE: COVE HEIGHT: 4"
BASE	B-6	MANUFACTURER: CROSSVILLE PRODUCT: AMERICANA SERIES COLOR: GOLD RUSH (UPS) AV112 SIZE: 6"X12" COVE BASE INSTALLATION PATTERN: ALIGN WITH FLOOR GROUT: MAPEI PALE UMBER 44
BASE	B-7	MANUFACTURER: WAUSAU TILE PRODUCT: PRECAST TERRAZZO COVE BASE COLOR: ANALYTICAL TZ53 FINE SIZE: 4" COVED WALL BASE WITH CHAMFERED TOP INSTALLATION PATTERN: ALIGN WITH FLOOR NOTE: BUTT-JOINT, NO GROUT

GENERAL NOTES

A PROVIDE SAME FINISHES AS ADJACENT ROOM FOR ALL CLOSETS.

B REFERENCE ARCHITECTURAL FLOOR PLANS FOR ACCENT PAINT LOCATIONS.

C REFERENCE REFLECTED CEILING PLANS FOR EXTENT OF GWB AND EXPOSED CEILINGS IN STUDENT ROOMS.

D REFERENCE INTERIOR ELEVATIONS FOR PLASTIC LAMINATE AND SOLID SURFACE LOCATIONS.

E INTERIOR HOLLOW METAL DOOR AND WINDOWS FRAMES TO BE PAINTED WITH COLOR TO MATCH ADJANCENT WALL, FINISH TO BE SEMI-GLOSS.

F MANUFACTURER'S NAMES LISTED IN THE INTERIOR FINISH SCHEDULES ARE FOR THE PURPOSE OF COLOR, TEXTURE AND PATTERN SELECTION. PRODUCTS FROM OTHER MANUFACTURERS MAY BE ACCEPTABLE PROVIDED THAT THOSE COLORS, TEXTURES AND PATTERNS CAN BE PROVIDED TO EXACTLY MATCH THE FINISH SAMPLES LISTED AND THOSE PRODUCTS MEET ALL OTHER REQUIREMENTS OF THE CONTRACT DOCUMENTS. COLOR SELECTIONS FOR VARIOUS MATERIALS ARE COMPLEMENTARY THEREFORE VARIATIONS IN THE COLORS, TEXTURES AND PATTERNS SCHEDULED WILL NOT BE ACCEPTABLE.

REGISTERED ARCHITECT
Thomas D. Saunders
3693
Tupelo, MS
STATE OF MISSISSIPPI
04 march 2013

THE McCARTY COMPANY
DESIGN GROUP, P.A.
MAILING ADDRESS:
P.O. BOX 440
TUPELO, MS 38802
OFFICE ADDRESS:
533 WEST MAIN STREET
TUPELO, MS 38804
TELEPHONE:
(662) 844-4400
FAX:
(662) 844-0500

DESIGN ARCHITECT
Hanbury Evans Wright Vlattas + Company
120 Atlantic Street
Norfolk, VA 23510
757.321.9600
www.hewv.com

PROJECT TITLE
USM - CENTURY PARK SOUTH
IHL# 208-297
HATTIESBURG, MISSISSIPPI

THE UNIVERSITY OF SOUTHERN MISSISSIPPI

PROJECT NO:
• 2012020
DRAWN BY:
• JCF
CHECKED BY:
• JPH
DATE ISSUED:
• 04 MAR 2013

REVISIONS & ADDENDUMS

SHEET TITLE
HEALTH CLINIC INTERIOR FINISH SCHEDULE

SHEET NUMBER
A022

Plot Date: BID DOCUMENTS - 04 MARCH 2013
3/11/2013 4:44:01 AM

INTERIOR FINISH SCHEDULE - LUCKYDAY (BUILDING B-C)											
Finish Type Key	Room Name	Number	Floor Finish	Code Floor	Base Finish	Code Base	Wall Finish	Code Wall	Ceiling Finish	Code Ceiling	Comments
F150	WAITING	LD100	VINYL	V-4	RUBBER	B-4	GWB	SEE COMMENTS	ACT/GWB	ACT-2/PT-4	PAINT SCHEDULE TO BE PROVIDE DURING CONSTRUCTION
F151	STAFF	LD101	CARPET	CPT-4	RUBBER	B-5	GWB	PT-2/PT-6	ACT	ACT-2	PT-6 ON SOUTH WALL
F152	STAFF	LD102	CARPET	CPT-4	RUBBER	B-5	GWB	PT-2/PT-5	ACT	ACT-2	PT-5 ON SOUTH WALL
F153	STAFF	LD103	CARPET	CPT-4	RUBBER	B-5	GWB	PT-2/PT-9	ACT	ACT-2	PT-9 ON SOUTH WALL
F154	DIRECTOR	LD104	CARPET	CPT-4	RUBBER	B-5	GWB	PT-2/PT-4	ACT	ACT-2	PT-4 ON SOUTH WALL
F155	FUTURE USE	LD105	CARPET	CPT-4	RUBBER	B-5	GWB	PT-2/PT-3	ACT	ACT-2	PT-3 ON SOUTH WALL
F156	STAIR	LD106	TILE	T-5	--	--	GWB	SEE COMMENTS	--	--	TILE AT LANDINGS/PRE-CAST TREAD/RISER AT STAIRS, PAINT TBD
F157	ELECTRICAL	LD107	CONCRETE	CONC-1	RUBBER	B-5	GWB	PT-1	EXPOSED	--	ACRYLIC PAINT ON EXPOSED STRUCTURE ABOVE
F158	HK	LD108	CONCRETE	CONC-1	RUBBER	B-5	GWB	PT-1	GWB	PT-1	
F159	STORAGE	LD109	VINYL	V-4	RUBBER	B-5	GWB	PT-1	ACT	ACT-2	
F160	WORK	LD110	CARPET	CPT-4	RUBBER	B-4	GWB	PT-3/PT-9	ACT	ACT-2	PT-9 ON NORTH WALL
F161	BREAK	LD111	VINYL	V-4	RUBBER	B-4	GWB	PT-3/PT-9	ACT	ACT-2	PT-9 ON SOUTH WALL
F162	CLASS / CONF.	LD112	CARPET	CPT-4	RUBBER	B-5	GWB	PT-2	ACT	ACT-2	
F163	STOR	LD112A	CARPET	CPT-4	RUBBER	B-5	GWB	PT-1	ACT	ACT-2	
F164	MEN'S TLT	LD113	TILE	T-3	TILE	B-6	TILE/GWB	T-4/PT-2	GWB	PT-1	CERAMIC WALL TILE TO 7'-0" AFF, GWB ABOVE
F165	WOMEN'S TLT	LD114	TILE	T-3	TILE	B-6	TILE/GWB	T-4/PT-2	GWB	PT-1	CERAMIC WALL TILE TO 7'-0" AFF, GWB ABOVE
F166	CORRIDOR	LD115	VINYL	V-4	RUBBER	B-4	GWB	PT-3	ACT	ACT-2	
F167	ELEVATOR	LD116	VINYL	V-4							
F168	STAIR	LD118	CONCRETE	CONC-1	RUBBER	B-1	CMU/CONC. TOPCOAT	PT-7	EXPOSED/GWB	PT-1	UNDERSIDE OF LANDINGS/STAIR EXPOSED, GWB CEILING AT 5TH FLOOR
F169	STAIR	LD206	TILE	T-3	TILE	B-7	GWB	SEE COMMENTS	ACT/GWB	ACT-2/PT-6	TILE AT LANDINGS/PRE-CAST TREAD/RISER AT STAIRS; PAINT TBD
F170	MULTI-PURPOSE ROOM	LD217	CARPET	CPT-5	RUBBER	B-4	GWB	PT-5	ACT/GWB	ACT-2/PT-5/PT-6	CARPET TILE LAYOUT TO BE PROVIDED DURING CONSTRUCTION
F171	STORAGE	LD217A	CARPET	CPT-5	RUBBER	B-5	GWB	PT-1	ACT	ACT-2	
F172	KITCHEN	LD217B	TILE	T-3	TILE	B-6	GWB	PT-2	GWB	PT-1	
F173	STORAGE	LD217C	CARPET	CPT-5	RUBBER	B-5	GWB	PT-1	ACT	ACT-2	
F174	STAIR	LD218	CONCRETE	CONC-1	RUBBER	B-5	CMU/CONC. TOPCOAT	PT-7/PT-1	EXPOSED/GWB	PT-1	PT-7 AS INTERMEDIATE COAT

FINISH LEGEND

ACOUSTIC CEILING	ACT-1	MANUFACTURER: ARMSTRONG PRODUCT: ULTIMA HIGH WASHABILITY ITEM NO: 1938 SIZE: 2 X 2 GRID: 15/16 PRELUDE
	ACT-2	MANUFACTURER: ARMSTRONG PRODUCT: ULTIMA TEGULAR FINE TEXTURE 1912 SIZE: 2 X 2 GRID: 9/16" SUPRAFINE
CARPET	CPT-1	MANUFACTURER: PATCRAFT PRODUCT: INTRINSIC COLOR: 00173 BEACH HOUSE INSTALLATION: MONOLITHIC
	CPT-2	MANUFACTURER: SHAW CONTRACT PRODUCT: STITCH COLOR: MODERN CROCHET INSTALLATION: BOUND AREA RUG
	CPT-3	MANUFACTURER: BIGELOW PRODUCT: SOLVE COLOR: 7975 COGNITION GREY INSTALLATION: TILE - MONOLITHIC
	CPT-4	MANUFACTURER: SHAW CONTRACT PRODUCT: 59550 SITE LINES COLOR: 38755 NATURAL CLAY INSTALLATION: TILE - ASHLAR
	CPT-5	MANUFACTURER: SHAW CONTRACT PRODUCT: HOMAGE PATTERNS: (1) CRAFT 59571, (2) EMBELLISH 59573, (3) BLOCK PRINT 59572 COLOR: (1) ENGRAVED 71761, (2) ENGRAVED METAL 71762, (3) ENGRAVED 71761 INSTALLATION: TILE - (1) ASHLAR, (2) QUARTER-TURN, (3) MONOLITHIC
CONCRETE	CONC-1	BY CONTRACTOR SEALED CONCRETE
FIBERGLASS PANEL	FRP-1	MANUFACTURER: MARLITE PRODUCT: STANDARD FRP TYPE: SMOOTH SURFACE COLOR: S100 S/2/S WHITE SIZE: 4' X 10' X 3/32"
PAINT	PT-1A	MANUFACTURER: SHERWIN WILLIAMS COLOR: SW6119 ANTIQUE WHITE FINISH: EGG SHELL
	PT-1B	MANUFACTURER: SHERWIN WILLIAMS COLOR: SW 6119 ANTIQUE WHITE FINISH: SATIN
	PT-2	MANUFACTURER: SHERWIN WILLIAMS COLOR: SW 6120 BELIEVABLE BUFF FINISH: EGG SHELL
	PT-3	MANUFACTURER: SHERWIN WILLIAMS COLOR: SW 6122 CAMELBACK FINISH: EGG SHELL
	PT-4	MANUFACTURER: SHERWIN WILLIAMS COLOR: SW 7550 RESORT TAN FINISH: EGG SHELL
	PT-5	MANUFACTURER: SHERWIN WILLIAMS COLOR: SW 0066 CASCADE GREEN FINISH: EGG SHELL
	PT-6	MANUFACTURER: SHERWIN WILLIAMS COLOR: SW 0047 STUDIO BLUE GREEN FINISH: EGG SHELL
	PT-7	MANUFACTURER: SHERWIN WILLIAMS TYPE: SW ULTRACRETE TEXTURE COATING APPLIED AS INTERMEDIATE COAT UNDER THE FINAL LATEX TOPCOAT
PAINT	PT-8	MANUFACTURER: COAT OF SILENCE ACOUSTICAL PAINT PRODUCTS, REF. SPECS
	PT-9	MANUFACTURER: SHERWIN WILLIAMS COLOR: SW 6341 RED CENT FINISH: EGG SHELL
PLASTIC LAMINATE	PLAM-1	MANUFACTURER: WILSON ART COLOR: MONTANA WALNUT 7110K-78
	PLAM-2	MANUFACTURER: FORMICA COLOR: EARTHEN WARP 5880-58 EDGE BAND: CHARTER IND. - PTST606 TAUPE
	PLAM-3	MANUFACTURER: WILSONART COLOR: 5TH AVE. ELM 7966K-12 EDGE BAND: CHARTER IND. - PEPPERDUST WD327
	PLAM-4	MANUFACTURER: WILSONART COLOR: SATIN STAINLESS 4830K-18
	PLAM-5	MANUFACTURER: FORMICA COLOR: CITADEL WARP 5882-58 EDGE BAND: CHARTER IND. - NORTHSEA WD90
RESILIENT	V-1	MANUFACTURER: CENTIVA PRODUCT: EVENT SERIES TYPE: WOOD PLANK COLOR: WPGW38-E SIZE: 6" WIDTH
	V-1 ALT 1	MANUFACTURER: CARPET ONE PRODUCT: INVINCIBLE LVT PLANK TYPE: CLICK SYSTEM COLOR: SHILOH 745 SIZE: 7" WIDTH
RESILIENT	V-2	MANUFACTURER: SHAW CONTRACT PRODUCT: NATIVE ORIGINS COLOR: 00722 HAND HEWN FIGURED WALNUT SIZE: 6" WIDTH
	V-3	MANUFACTURER: CENTIVA PRODUCT: EVENT SERIES COLOR: AMERICAN CHERRY WP 3305-E SIZE: 6" WIDTH
	V-4	MANUFACTURER: CENTIVA PRODUCT: EVENT SERIES COLOR: NUTMEG OLIVET WP OL07-E SIZE: 6" WIDTH
	SV-1	MANUFACTURER: MANINGTON PRODUCT: PRIMUS FRAMEWORK SHEET VINYL COLOR: TOASTED SESAME - ALL107
	SV-2	MANUFACTURER: MANINGTON PRODUCT: PRIMUS LACOSTA SHEET VINYL COLOR: STERLING BLUE ALL128
SOLID SURFACE	SS-1	MANUFACTURER: WILTCHER INDUSTRIES PRODUCT: TRANSOLID SOLID SURFACE COLOR: CAPE SANDS (65) THICKNESS: 1/2" NOSING: KNIFE EDGE
	SS-2	MANUFACTURER: WILTCHER INDUSTRIES PRODUCT: TRANSOLID SOLID SURFACE COLOR: SHORE ROAD (79) THICKNESS: 1/2" NOSING: KNIFE EDGE
	SS-3	MANUFACTURER: DUPONT PRODUCT: CORIAN COLOR: COTTAGE LANE THICKNESS: 1/2" NOSING: DOUBLE ROUND
SOLID SURF.	SS-4	MANUFACTURER: DUPONT PRODUCT: CORIAN - PRIVATE COLLECTION COLOR: SONORA THICKNESS: 1/2" NOSING: DOUBLE ROUND
TILE	CT-1	MANUFACTURER: DALTILE PRODUCT: CONTINENTAL SLATE COLOR: PERSIAN GOLD SIZE: 6" X 6" INSTALLATION PATTERN: GRID GROUT: TBD
	CT-2	MANUFACTURER: DALTILE PRODUCT: CONTINENTAL SLATE COLOR: PERSIAN GOLD SIZE: 12" X 18" INSTALLATION PATTERN: GRID GROUT: TBD
	CT-3	MANUFACTURER: CROSSVILLE PRODUCT: AMERICANA SERIES COLOR: GOLD RUSH (UPS) AV112 SIZE: 12" X 12" X 5/16" INSTALLATION PATTERN: GRID GROUT: MAPEI PALE UMBER 44
	CT-4	MANUFACTURER: CROSSVILLE PRODUCT: CROSS-COLORS MINGLES COLOR: SAHARA DUNE A235 W/ ACCENT BAND OF BROWN TWEED A750 SIZE: 12" X 12" X 5/16" (WALL TILE) INSTALLATION PATTERN: GRID GROUT: MAPEI STRAW 94 NOTE: BULLNOSE TRIM AT TOP EDGE (COLOR A235)
	CT-5	MANUFACTURER: WAUSAU TILE PRODUCT: PRECAST TERRAZZO UNIT STAIR TREAD, RISERS AND LANDINGS COLOR: ANALYTICAL TZ53 FINE SIZE: 16"X16" AT LANDINGS, REF. DRAWINGS FOR TREADS AND RISERS INSTALLATION PATTERN: GRID NOTE: BUTT-JOINT, NO GROUT
BASE	B-1	MANUFACTURER: JOHNSONITE PRODUCT: RUBBER BASE COLOR: ALMOND TYPE: COVE HEIGHT: 4"
	B-2	MANUFACTURER: DALTILE PRODUCT: CONTINENTAL SLATE COLOR: PERSIAN GOLD SIZE: 6" X 12" COVE BASE INSTALLATION PATTERN: ALIGN WITH FLOOR TILE JOINTS GROUT: TBD
	B-3	MANUFACTURER: WILTCHER INDUSTRIES PRODUCT: TRANSOLID SOLID SURFACE COLOR: SHORE ROAD (79) THICKNESS: SEE DRAWINGS FOR PROFILE
	B-4	MANUFACTURER: JOHNSONITE PRODUCT: MILLWORK CONTOURED WALL BASE PROFILE: AMBASSADOR COLOR: ALMOND 034 HEIGHT: 4"
	B-5	MANUFACTURER: JOHNSONITE PRODUCT: RUBBER BASE COLOR: SANDLEWOOD 045 TYPE: COVE HEIGHT: 4"
	B-6	MANUFACTURER: CROSSVILLE PRODUCT: AMERICANA SERIES COLOR: GOLD RUSH (UPS) AV112 SIZE: 6"X12" COVE BASE INSTALLATION PATTERN: ALIGN WITH FLOOR GROUT: MAPEI PALE UMBER 44
	B-7	MANUFACTURER: WAUSAU TILE PRODUCT: PRECAST TERRAZZO COVE BASE COLOR: ANALYTICAL TZ53 FINE SIZE: 4" COVED WALL BASE WITH CHAMFERED TOP INSTALLATION PATTERN: ALIGN WITH FLOOR NOTE: BUTT-JOINT, NO GROUT

GENERAL NOTES

A PROVIDE SAME FINISHES AS ADJACENT ROOM FOR ALL CLOSETS.

B REFERENCE ARCHITECTURAL FLOOR PLANS FOR ACCENT PAINT LOCATIONS.

C REFERENCE REFLECTED CEILING PLANS FOR EXTENT OF GWB AND EXPOSED CEILINGS IN STUDENT ROOMS.

D REFERENCE INTERIOR ELEVATIONS FOR PLASTIC LAMINATE AND SOLID SURFACE LOCATIONS.

E INTERIOR HOLLOW METAL DOOR AND WINDOWS FRAMES TO BE PAINTED WITH COLOR TO MATCH ADJANCENT WALL, FINISH TO BE SEMI-GLOSS.

F MANUFACTURER'S NAMES LISTED IN THE INTERIOR FINISH SCHEDULES ARE FOR THE PURPOSE OF COLOR, TEXTURE AND PATTERN SELECTION. PRODUCTS FROM OTHER MANUFACTURERS MAY BE ACCEPTABLE PROVIDED THAT THOSE COLORS, TEXTURES AND PATTERNS CAN BE PROVIDED TO EXACTLY MATCH THE FINISH SAMPLES LISTED AND THOSE PRODUCTS MEET ALL OTHER REQUIREMENTS OF THE CONTRACT DOCUMENTS. COLOR SELECTIONS FOR VARIOUS MATERIALS ARE COMPLEMENTARY THEREFORE VARIATIONS IN THE COLORS, TEXTURES AND PATTERNS SCHEDULED WILL NOT BE ACCEPTABLE.

REGISTERED ARCHITECT
Thomas D. Saunders
3693
Tupelo, MS
STATE OF MISSISSIPPI
04 march 2013

THE McCARTY COMPANY
DESIGN GROUP, P.A.
MAILING ADDRESS:
P.O. BOX 440
TUPELO, MS 38802
OFFICE ADDRESS:
533 WEST MAIN STREET
TUPELO, MS 38804
TELEPHONE:
(662) 844-4400
FAX:
(662) 844-0500

DESIGN ARCHITECT
Hanbury Evans Wright Vlattas + Company
120 Atlantic Street
Norfolk, VA 23510
757.321.9600
www.hewv.com

PROJECT TITLE
USM - CENTURY PARK SOUTH
IHL# 208-297
HATTIESBURG, MISSISSIPPI

THE UNIVERSITY OF SOUTHERN MISSISSIPPI

PROJECT NO:
- 2012020

DRAWN BY:
- JCF

CHECKED BY:
- JPH

DATE ISSUED:
- 04 MAR 2013

REVISIONS & ADDENDUMS

SHEET TITLE
LUCKYDAY INTERIOR FINISH SCHEDULE

SHEET NUMBER
A023

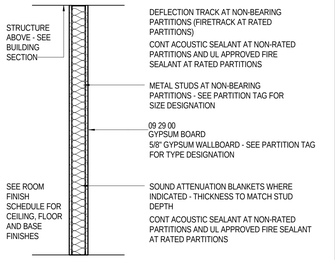

PARTITION TYPE S

UL=U419 / U451
STC=55-59

3/4" = 1'-0" 0' 8' 16' 24'

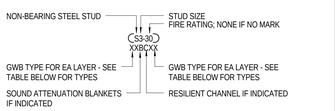

PARTITION MODIFIERS

UL FIRE RATINGS :

30 = 30 MINUTES: UL - U419
1 = 1 HOUR: UL - U419
2 = 2 HOUR: UL - U419

GWB TYPE DESIGNATOR:

A = TYPE 'X' ABUSE RESISTANT
X = TYPE 'X'
R = REGULAR
M = MOISTURE RESISTANT
G = MOISTURE RESISTANT TYPE 'X'
T = TILE BACKER
L = TYPE 'X' LINER BOARD
F = FOIL BACKED
- = NO GWB; CHASE WALL

STUD SIZE:

1 = 1 5/8" 4 = 4"
2 = 2 1/2" 6 = 6"
3 = 3 5/8" 8 = 8"

OPTIONAL DESIGNATORS:

C = 1/2" RESILIENT CHANNEL (RC-1)
B = SOUND ATTENUATION BLANKET

NOTES:

WHERE NOTED ON THE PLAN OR ENLARGED SUITE TYPES - RC INDICATES THE SIDE OF THE PARTITION FOR THE RESILIENT CHANNEL

WHERE SOUND BATTS ARE INDICATED, PROVIDE ACOUSTICAL SEAL AT TOP OF PARTITION TO ROOF/FLOOR DECK ABOVE (COMPLETELY FILL FLUTES AT STEEL DECKING)

WHERE FIRE RATED PARTITIONS ARE INDICATED, PROVIDE UL APPROVED FIRE SEALANT AT TOP OF PARTITION TO ROOF/FLOOR DECK ABOVE AND BOTTOM OF PARTITION (COMPLETELY FILL FLUTES AT STEEL DECKING)

ALL FIRE BARRIERS, FIRE PARTITIONS, FIRE WALLS, SMOKE BARRIERS, SMOKE PARTITIONS OR ANY PARTITIONS REQUIRED TO HAVE PROTECTED OPENINGS OR PENETRATIONS TO BE PERMANENTLY IDENTIFIED WITH SIGNS OR STENCILING. SUCH IDENTIFICATION SHALL:

1. BE LOCATED IN ACCESSIBLE CONCEALED FLOOR, FLOOR-CEILING OR ATTIC SPACES.
2. BE REPEATED AT INTERVALS NOT EXCEEDING 30 FEET MEASURED HORIZONTALLY ALONG THE WALL PARTITION
3. INCLUDE LETTERING NOT LESS THAN 0.5 INCHES HIGH, INCORPORATING THE WORDING "FIRE AND/OR SMOKE BARRIER - PROTECT ALL OPENINGS"

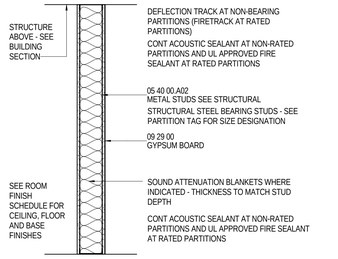

PARTITION TYPE SB

UL=U423
STC=55-59

3/4" = 1'-0" 0' 8' 16' 24'

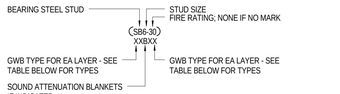

PARTITION MODIFIERS

UL FIRE RATINGS ('S' PARTITIONS):

30 = 30 MINUTES: UL - U419
1 = 1 HOUR: UL - U419
2 = 2 HOUR: UL - U419

UL FIRE RATINGS ('SB' PARTITIONS):

30 = 30 MINUTES: UL - U423
1 = 1 HOUR: UL - U423
2 = 2 HOUR: UL - U423

GWB TYPE DESIGNATOR:

A = TYPE 'X' ABUSE RESISTANT
X = TYPE 'X'
R = REGULAR
M = MOISTURE RESISTANT
G = MOISTURE RESISTANT TYPE 'X'
T = TILE BACKER
L = TYPE 'X' LINER BOARD
F = FOIL BACKED
- = NO GWB; CHASE WALL

STUD SIZE:

1 = 1 5/8" 4 = 4"
2 = 2 1/2" 6 = 6"
3 = 3 5/8" 8 = 8"

OPTIONAL DESIGNATORS:

C = 1/2" RESILIENT CHANNEL (RC-1)
B = SOUND ATTENUATION BLANKET

NOTES:

WHERE NOTED ON THE PLAN OR ENLARGED SUITE TYPES - RC INDICATES THE SIDE OF THE PARTITION FOR THE RESILIENT CHANNEL

WHERE SOUND BATTS ARE INDICATED, PROVIDE ACOUSTICAL SEAL AT TOP OF PARTITION TO ROOF/FLOOR DECK ABOVE (COMPLETELY FILL FLUTES AT STEEL DECKING)

ALL BEARING WALLS ARE 2 HOUR FIRE RATED TO PROTECT STRUCTURE

WHERE FIRE RATED PARTITIONS ARE INDICATED, PROVIDE UL APPROVED FIRE SEALANT AT TOP OF PARTITION TO ROOF/FLOOR DECK ABOVE AND BOTTOM OF PARTITION (COMPLETELY FILL FLUTES AT STEEL DECKING)

ALL FIRE BARRIERS, FIRE PARTITIONS, FIRE WALLS, SMOKE BARRIERS, SMOKE PARTITIONS OR ANY PARTITIONS REQUIRED TO HAVE PROTECTED OPENINGS OR PENETRATIONS TO BE PERMANENTLY IDENTIFIED WITH SIGNS OR STENCILING. SUCH IDENTIFICATION SHALL:

1. BE LOCATED IN ACCESSIBLE CONCEALED FLOOR, FLOOR-CEILING OR ATTIC SPACES.
2. BE REPEATED AT INTERVALS NOT EXCEEDING 30 FEET MEASURED HORIZONTALLY ALONG THE WALL PARTITION
3. INCLUDE LETTERING NOT LESS THAN 0.5 INCHES HIGH, INCORPORATING THE WORDING "FIRE AND/OR SMOKE BARRIER - PROTECT ALL OPENINGS"

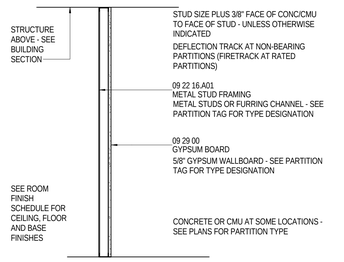

PARTITION TYPE F

3/4" = 1'-0" 0' 8' 16' 24'

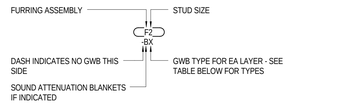

PARTITION MODIFIERS

GWB TYPE DESIGNATOR

A = TYPE 'X' ABUSE RESISTANT
X = TYPE 'X'
R = REGULAR
M = MOISTURE RESISTANT
G = MOISTURE RESISTANT TYPE 'X'
T = TILE BACKER
L = TYPE 'X' LINER BOARD
F = FOIL BACKED

STUD SIZE:

1 = 7/8" 6 = 6"
2 = 1 5/8" 8 = 8"
3 = 2 1/2"
4 = 3 5/8"

OPTIONAL DESIGNATORS:

C = 1/2" RESILIENT CHANNEL (RC-1)
B = SOUND ATTENUATION BLANKET

NOTES: WHERE STEEL STUDS NEXT TO CONCRETE/CMU WALL, STEEL STUDS BRACED BACK TO CONCRETE/CMU AT THIRD POINT

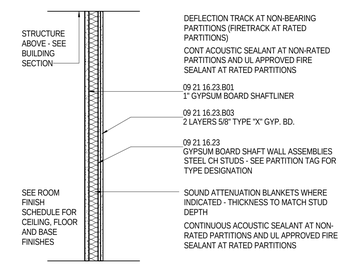

PARTITION TYPE H

UL=U415 SYSTEM "C"
STC=50-54

3/4" = 1'-0" 0' 8' 16' 24'

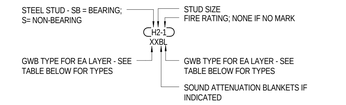

PARTITION MODIFIERS

UL FIRE RATINGS :

1 = 1 HOUR: UL - U415
2 = 2 HOUR: UL - U415

GWB TYPE DESIGNATOR:

A = TYPE 'X' ABUSE RESISTANT
X = TYPE 'X'
R = REGULAR
M = MOISTURE RESISTANT
G = MOISTURE RESISTANT TYPE 'X'
T = TILE BACKER
L = TYPE 'X' LINER BOARD
F = FOIL BACKED
- = NO GWB; CHASE WALL

STUD SIZE:

1 = 1 5/8" 4 = 4"
2 = 2 1/2" 6 = 6"
3 = 3 5/8" 8 = 8"

OPTIONAL DESIGNATORS:

C = 1/2" RESILIENT CHANNEL (RC-1)
B = SOUND ATTENUATION BLANKET

NOTES:

WHERE NOTED ON THE PLAN OR ENLARGED SUITE TYPES - RC INDICATES THE SIDE OF THE PARTITION FOR THE RESILIENT CHANNEL

WHERE SOUND BATTS ARE INDICATED, PROVIDE ACOUSTICAL SEAL AT TOP OF PARTITION TO ROOF/FLOOR DECK ABOVE (COMPLETELY FILL FLUTES AT STEEL DECKING)

WHERE FIRE RATED PARTITIONS ARE INDICATED, PROVIDE UL APPROVED FIRE SEALANT AT TOP OF PARTITION TO ROOF/FLOOR DECK ABOVE AND BOTTOM OF PARTITION (COMPLETELY FILL FLUTES AT STEEL DECKING)

ALL FIRE BARRIERS, FIRE PARTITIONS, FIRE WALLS, SMOKE BARRIERS, SMOKE PARTITIONS OR ANY PARTITIONS REQUIRED TO HAVE PROTECTED OPENINGS OR PENETRATIONS TO BE PERMANENTLY IDENTIFIED WITH SIGNS OR STENCILING. SUCH IDENTIFICATION SHALL:

1. BE LOCATED IN ACCESSIBLE CONCEALED FLOOR, FLOOR-CEILING OR ATTIC SPACES.
2. BE REPEATED AT INTERVALS NOT EXCEEDING 30 FEET MEASURED HORIZONTALLY ALONG THE WALL PARTITION
3. INCLUDE LETTERING NOT LESS THAN 0.5 INCHES HIGH, INCORPORATING THE WORDING "FIRE AND/OR SMOKE BARRIER - PROTECT ALL OPENINGS"

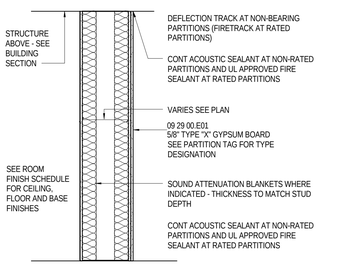

PARTITION TYPE SC

UL=U493
STC=64

3/4" = 1'-0" 0' 8' 16' 24'

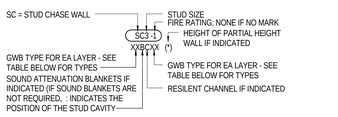

PARTITION MODIFIERS

UL FIRE RATINGS (NON-BEARING):

1 = 1 HOUR: UL - U420
2 = 2 HOUR; UL - U420

OPTIONAL FINISH DESIGNATOR:

A = TYPE 'X' ABUSE RESISTANT
X = TYPE 'X'
R = REGULAR
M = MOISTURE RESISTANT
G = MOISTURE RESISTANT TYPE 'X'
T = TILE BACKER
L = TYPE 'X' LINER BOARD
F = FOIL BACKED
S = ACOUSTICALLY ENHANCED BOARD
~ = NO GWB; CHASE WALL

STUD SIZE:

1 = 1 5/8" 4 = 4"
2 = 2 1/2" 6 = 6"
3 = 3 5/8" 8 = 8"

OPTIONAL DESIGNATORS:

B = SOUND ATTENUATION BLANKET
: = INDICATES STUD CAVITY

NOTES:

GWB AND OPTIONAL DESIGNATORS READ FROM THE SIDE OF THE PARTITION WHERE THE TAG IS LOCATED AND ACROSS THE WIDTH OF THE PARTITION.

WHERE SOUND BATTS ARE INDICATED, PROVIDE ACOUSTICAL SEAL AT TOP OF PARTITION TO ROOF/FLOOR DECK ABOVE (COMPLETELY FILL FLUTES AT STEEL DECKING)

AT HIGH PERFORMANCE ACOUSTIC WALLS (ALL PARTITIONS AND FURRING UTILIZING TYPE 'S' ACOUSTICALLY ENHANCED GYPSUM BOARD) PROVIDE ACOUSTICAL SEALANT AT ALL WALL PENETRATIONS (ANNULAR SPACE BETWEEN GYPSUM BOARD AND PENETRATION) AND ACOUSTICAL PUTTY PADS AT ALL ELECTRICAL, TELECOMMUNICATION AND DATA OUTLET BOXES. SEAL PERIMETER OF PARTITION WITH ACOUSTICAL SEALANT TO ALL ADJOINING CONSTRUCTION.

WHERE FIRE RATED PARTITIONS ARE INDICATED, PROVIDE UL APPROVED FIRE SEALANT AT TOP OF PARTITION TO ROOF/FLOOR DECK ABOVE AND BOTTOM OF PARTITION (COMPLETELY FILL FLUTES AT STEEL DECKING)

ALL FIRE BARRIERS, FIRE PARTITIONS, FIRE WALLS, SMOKE BARRIERS, SMOKE PARTITIONS OR ANY PARTITIONS REQUIRED TO HAVE PROTECTED OPENINGS OR PENETRATIONS TO BE PERMANENTLY IDENTIFIED WITH SIGNS OR STENCILING. SUCH IDENTIFICATION SHALL:

1. BE LOCATED IN ACCESSIBLE CONCEALED FLOOR, FLOOR-CEILING OR ATTIC SPACES.
2. BE REPEATED AT INTERVALS NOT EXCEEDING 30 FEET MEASURED HORIZONTALLY ALONG THE WALL PARTITION
3. INCLUDE LETTERING NOT LESS THAN 0.5 INCHES HIGH, INCORPORATING THE WORDING "FIRE AND/OR SMOKE BARRIER - PROTECT ALL OPENINGS"

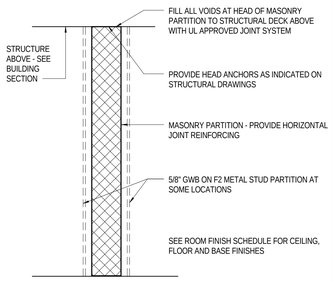

PARTITION TYPE M

UL=U906

3/4" = 1'-0" 0' 8' 16' 24'

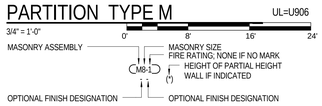

PARTITION MODIFIERS

UL FIRE RATINGS (NON-BEARING):

30 = 30 MINUTE; UL - U905
1 = 1 HOUR; UL - U905
2 = 2 HOUR; UL - U905
3 = 3 HOUR; UL - U904
4 = 4 HOUR; UL - U901

UL FIRE RATINGS (BEARING):

30 = 30 MINUTE; UL - U905
1 = 1 HOUR; UL - U905
2 = 2 HOUR; UL - U905
3 = 3 HOUR; UL - U904
4 = 4 HOUR; UL - U901

MASONRY SIZE:

2 = 1 5/8" 8 = 7 5/8"
4 = 3 5/8" 10 = 9 5/8"
6 = 5 5/8" 12 = 11 5/8"

GWB TYPE DESIGNATOR

A = TYPE 'X' ABUSE RESISTANT
X = TYPE 'X'
R = REGULAR
M = MOISTURE RESISTANT TYPE 'X'
T = TILE BACKER
L = TYPE 'X' LINER BOARD
F = FOIL BACKED
S = ACOUSTICALLY ENHANCED BOARD

OPTIONAL FINISH DESIGNATOR:

P = VENEER PLASTER
T = CERAMIC TILE
D = DECORATIVE FACE
F = FLUSH STRUCK

NOTES: AT LOCATIONS WHERE FURRING AND GYPSUM BOARD IS SHOWN ON FACE OF MASONRY WALLS, REFER TO PARTITION TYPE 'F'

WHERE FIRE RATED PARTITIONS ARE INDICATED, PROVIDE UL APPROVED FIRE SEALANT AT TOP OF PARTITION TO ROOF/FLOOR DECK ABOVE AND BOTTOM OF PARTITION (COMPLETELY FILL FLUTES AT STEEL DECKING)

ALL FIRE BARRIERS, FIRE PARTITIONS, FIRE WALLS, SMOKE BARRIERS, SMOKE PARTITIONS OR ANY PARTITIONS REQUIRED TO HAVE PROTECTED OPENINGS OR PENETRATIONS TO BE PERMANENTLY IDENTIFIED WITH SIGNS OR STENCILING. SUCH IDENTIFICATION SHALL:

1. BE LOCATED IN ACCESSIBLE CONCEALED FLOOR, FLOOR-CEILING OR ATTIC SPACES.
2. BE REPEATED AT INTERVALS NOT EXCEEDING 30 FEET MEASURED HORIZONTALLY ALONG THE WALL PARTITION
3. INCLUDE LETTERING NOT LESS THAN 0.5 INCHES HIGH, INCORPORATING THE WORDING "FIRE AND/OR SMOKE BARRIER - PROTECT ALL OPENINGS"

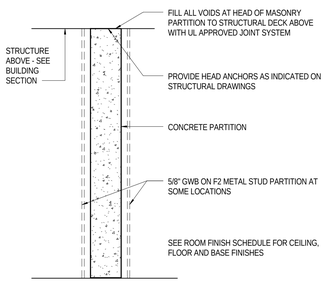

PARTITION TYPE C

3/4" = 1'-0"

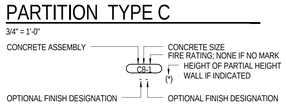

PARTITION MODIFIERS

CONCRETE SIZE:

2 = 2" 8 = 7 5/8"
4 = 4" 10 = 10"
6 = 6" 12 = 12"

GWB TYPE DESIGNATOR

A = TYPE 'X' ABUSE RESISTANT
X = TYPE 'X'
R = REGULAR
M = MOISTURE RESISTANT TYPE 'X'
T = TILE BACKER
L = TYPE 'X' LINER BOARD
F = FOIL BACKED
S = ACOUSTICALLY ENHANCED BOARD

NOTES: 8" CAST IN PLACE CONCRETE WALL HAS 4 HOURS FIRE RESISTANCE RATED PER THE INTERNATIONAL BUILDING CODE (IBC) TABLE 721.2.1.1

AT LOCATIONS WHERE FURRING AND GYPSUM BOARD IS SHOWN ON FACE OF MASONRY WALLS, REFER TO PARTITION TYPE 'F'

MATERIAL KEYING

05 40 00.A02	METAL STUDS SEE STRUCTURAL
09 21 16.23	GYPSUM BOARD SHAFT WALL ASSEMBLIES
09 21 16.23.B01	1" GYPSUM BOARD SHAFTLINER
09 21 16.23.B03	2 LAYERS 5/8" TYPE "X" GYP. BD.
09 22 16.A01	METAL STUD FRAMING
09 29 00	GYPSUM BOARD
09 29 00.E01	5/8" TYPE "X" GYPSUM BOARD

THE McCARTY COMPANY
DESIGN GROUP, P.A.
TELEPHONE: (662) 844-4400
FAX: (662) 844-0500
OFFICE ADDRESS: 535 WEST MAIN STREET TUPELO, MS 38804
MAILING ADDRESS: P.O. BOX 440 TUPELO, MS 38802

DESIGN ARCHITECT
Hanbury Evans Wright Vlattas + Company
120 Atlantic Street
Norfolk, VA 23510
757.321.9600
www.hewv.com

PROJECT TITLE
USM - CENTURY PARK SOUTH
IHL# 208-297
HATTIESBURG, MISSISSIPPI

THE UNIVERSITY OF SOUTHERN MISSISSIPPI

PROJECT NO: 2012020
DRAWN BY: SOM
CHECKED BY: JTG
DATE ISSUED: 04 MAR 2013

REVISIONS & ADDENDUMS

SHEET TITLE
PARTITION TYPES

SHEET NUMBER
A026

3/4/2013 12:49:40 PM

Plot Date: BID DOCUMENTS - 04 MARCH 2013

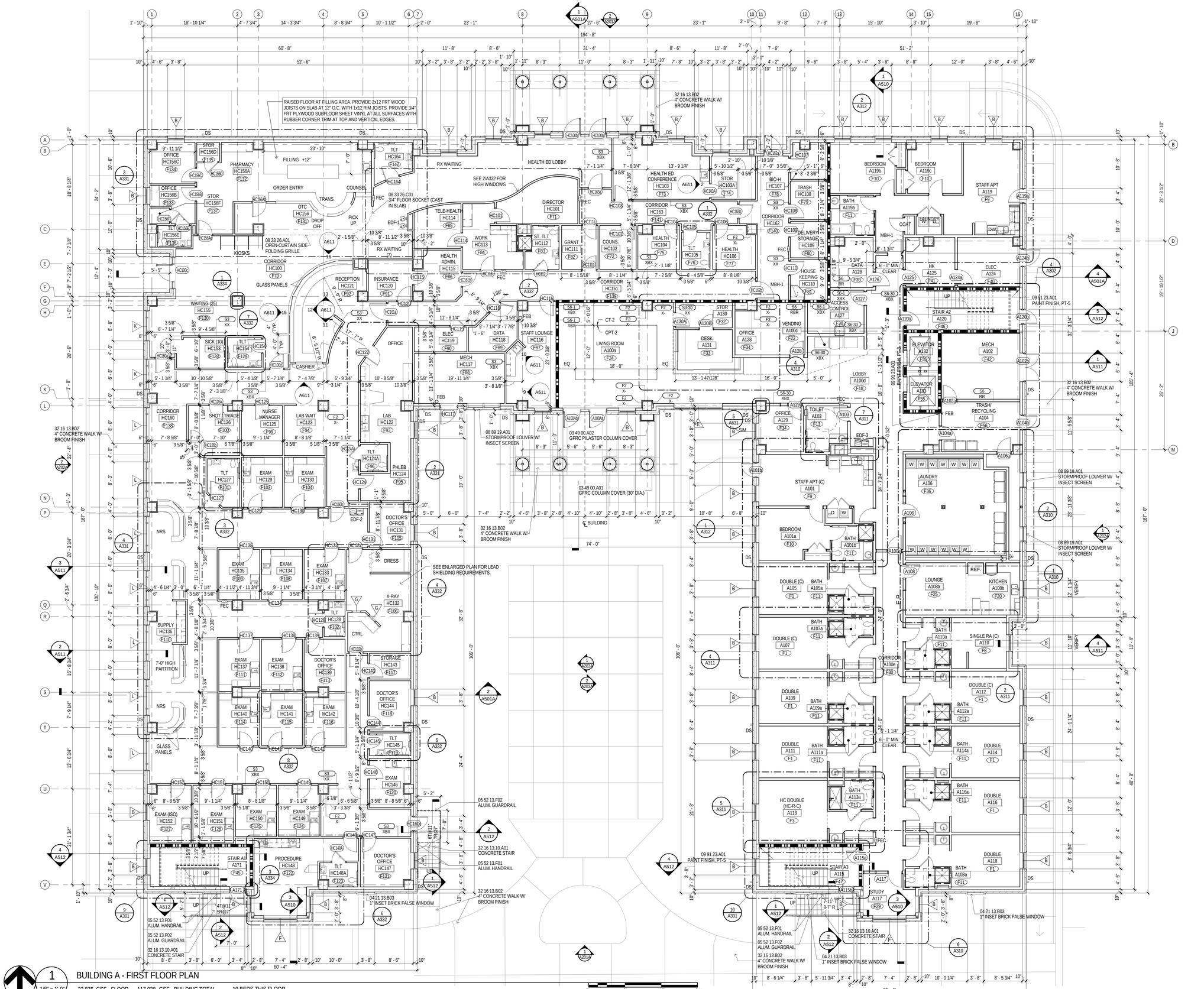

MATERIAL KEYING

03 49 00.A01	GFRC COLUMN COVER (30" DIA.)
03 49 00.A02	GFRC PILASTER COLUMN COVER
04 21 13.B03	1" INSET BRICK FALSE WINDOW
05 52 13.F01	ALUM. HANDRAIL
05 52 13.F02	ALUM. GUARDRAIL
08 33 26.A01	OPEN-CURTAIN SIDE FOLDING GRILLE
08 33 26.C01	3/4" FLOOR SOCKET (CAST IN SLAB)
08 89 19.A01	STORMPROOF LOUVER W/ INSECT SCREEN
32 16 13.10.A01	CONCRETE STAIR
32 16 13.B02	4" CONCRETE WALK W/ BROOM FINISH

LEGEND

FEC	10 44 13.B01 SEMI-RECESSED FIRE EXT. CABINET
FEB	10 44 13.C01 FIRE EXT. BRACKET
DS	PREMANUFACTURED ALUMINUM DOWNSPOUT
EDF-1	ELECTRIC DRINKING FOUNTAIN. SEE PLUMBING.
EDF-2	ELECTRIC DRINKING FOUNTAIN. SEE PLUMBING.
EDF-3	ELECTRIC DRINKING FOUNTAIN WITH BOTTLE FILLER. SEE PLUMBING.
MBH-1	10 28 00.101 MOP AND BROOM HOLDER (MBH-1)
CJ	CONTROL JOINT
EJ-#	07 95 00.### EXPANSION JOINT COVER (EJ-#)
E.P.	EMERGENCY PHONE SEE ELECTRICAL

GENERAL NOTES

A ALL INTERIOR AND EXTERIOR DIMENSIONS ARE TO FACE OF STUD, CMU, CONCRETE OR COLUMN CENTERLINE UNLESS NOTED OTHERWISE.

B UNLESS NOTED OTHERWISE, ALL OVERALL EXTERIOR DIMENSIONS INCLUDING BRICK MASONRY OPENINGS ARE TO FACE OF BRICK VENEER.

C WHERE INTERIOR FACE OF FINISH OR CLEAR DIMENSIONS ARE INDICATED FOR COORDINATION PURPOSES OR TO DESIGNATE REQUIRED CODE CLEARANCES, THE DIMENSION IS TYPICALLY DESIGNATED AS "FOF" (FACE OF FINISH) OR "CLEAR".

D PROVIDE COMPLETE FIRE STOP AT ALL STRUCTURAL, MECHANICAL AND ELECTRICAL PENETRATIONS THROUGH ALL FIRE RATED ASSEMBLIES. REFER TO SPECIFICATIONS FOR REQUIREMENTS.

E CONTRACTOR TO PROVIDE 12 GAGE METAL BLOCKING IN STUD WALLS FOR ANCHORAGE OF WALL MOUNTED ITEMS INCLUDING BUT NOT LIMITED TO TOILET ACCESSORIES, WALL CABINETS, WALL MOUNTED TV'S, SHELVING, TOILET PARTITIONS, OWNER FURNISHED EQUIPMENT INDICATED AND SIMILAR ITEMS. FOR TYPE B DWELLING UNITS, PROVIDE METAL BLOCKING IN WALLS FOR FUTURE INSTALLATIONS AS INDICATED. FOR WALL MOUNTED TV'S IN LOUNGES, PROVIDE METAL BLOCKING 24" ABOVE AND BELOW ELECTRICAL JUNCTION BOXES.

F AT ALL HOUSEKEEPING MOP SINKS, PROVIDE WALL PROTECTION WITH 22 GA. STAINLESS STEEL SKIRT 48" AFF AND 30" WIDE AT EACH WALL FROM CORNER, WITH BENT SEAM AT CORNER.

G IN GYPSUM WALLBOARD APPLICATIONS, INSTALL CONTROL JOINTS IN ACCORDANCE WITH ASTM C840 AT LOCATIONS AS INDICATED ON DRAWINGS BY "CJ".

H SHOWER UNITS SHALL BE GROUTED SOLID UNDERNEATH - FILL VOID BETWEEN FLOOR SLAB AND FLOOR OF SHOWER.

I PROVIDE 3/4" EXT. FIRE-RETARDANT-TREATED PLYWOOD BACKER PANELS FROM FLOOR TO 8'-0" AFF, LAYERED OVER GYPSUM BOARD, TO ALL WALLS AT ALL DATA AND ACCESS CONTROL ROOMS.

J PROVIDE MOP AND BROOM HOLDER WITH SHELF PER SPECIFICATION 102800 AND AS INDICATED BY "MBH-1" ABOVE ALL FLOOR SINKS AT HOUSEKEEPING CLOSETS, MOUNTED 60" AFF TO BOTTOM.

K REFER TO A026 FOR DESCRIPTION OF ALL PARTITION TYPES.

L REFER TO A300 SERIES DRAWINGS (ENLARGED PLANS) FOR CONTINUATION OF DIMENSIONS AND PARTITION TYPES.

M REFER TO A100 (1/8" FLOOR PLANS) SERIES DRAWINGS AND A200 SERIES DRAWINGS (ENLARGED PLANS) FOR PARTITION TYPE LOCATIONS.

N REFER TO LS SERIES DRAWING (LIFE SAFETY PLANS) FOR LOCATIONS OF FIRE RATED WALLS AND PARTITIONS.

O REFER TO A000 SERIES DRAWINGS FOR WINDOW TYPES AND DOOR TYPES, SCHEDULES AND DETAILS.

P REFER TO A000 SERIES DRAWINGS FOR INTERIOR FINISH SCHEDULES.

Q REFER TO A300 SERIES DRAWINGS (ENLARGED PLANS) FOR ADDITIONAL PLAN NOTES.

KEY PLAN

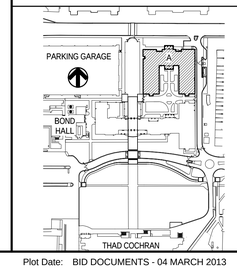

REGISTERED ARCHITECT — Hanbury Evans Wright Vlattas & Company — 3449 Tupelo, MS — STATE OF MISSISSIPPI — 04 march 2013

MICHAEL EVANS 4283 — 04 MAR 2013 — STATE OF MISSISSIPPI

THE McCARTY COMPANY
DESIGN GROUP, P.A.
TELEPHONE: (662) 844-4400
FAX: (662) 844-0500
OFFICE ADDRESS: 533 WEST MAIN STREET TUPELO, MS 38804
MAILING ADDRESS: P.O. BOX 440 TUPELO, MS 38802

DESIGN ARCHITECT
Hanbury Evans Wright Vlattas + Company
120 Atlantic Street
Norfolk, VA 23510
757.321.9600
www.hewv.com

PROJECT TITLE
USM - CENTURY PARK SOUTH
IHL# 208-297
HATTIESBURG, MISSISSIPPI

THE UNIVERSITY OF SOUTHERN MISSISSIPPI

PROJECT NO: 2012020
DRAWN BY: JCF, SOM
CHECKED BY: JPH, JTG
DATE ISSUED: 04 MAR 2013

REVISIONS & ADDENDUMS

SHEET TITLE
BUILDING A - FIRST FLOOR PLAN

SHEET NUMBER
A101A

3/11/2013 4:44:59 AM

Plot Date: BID DOCUMENTS - 04 MARCH 2013

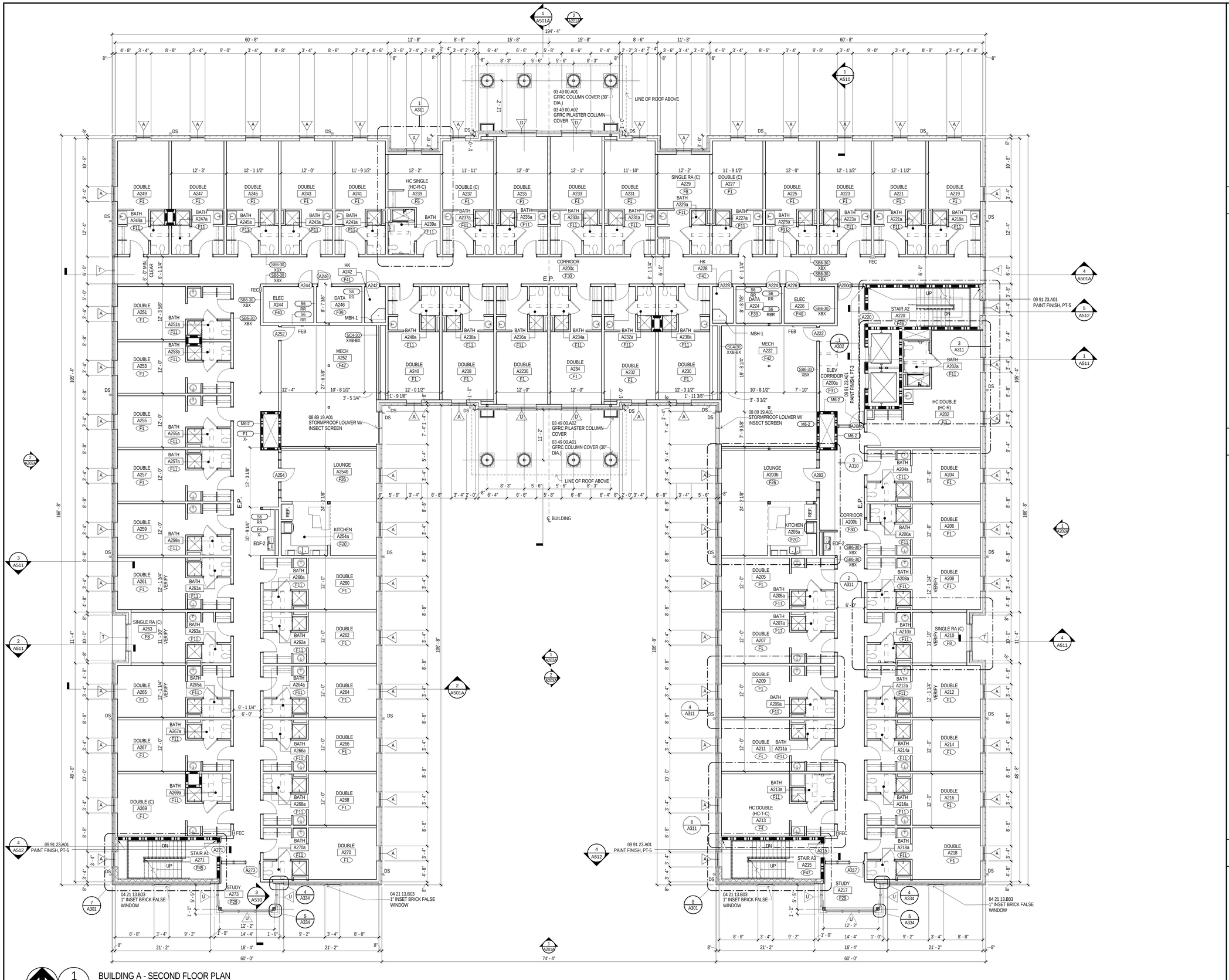

1 BUILDING A - SECOND FLOOR PLAN

1/8" = 1'-0"

23,516 GSF - FLOOR 117,938 GSF - BUILDING TOTAL 100 BEDS THIS FLOOR

NORTH

MATERIAL KEYING

03 49 00.A01	GFRC COLUMN COVER (30" DIA.)
03 49 00.A02	GFRC PILASTER COLUMN COVER
04 21 13.B03	1" INSET BRICK FALSE WINDOW
08 89 19.A01	STORMPROOF LOUVER W/ INSECT SCREEN

LEGEND

FEC	10 44 13.B01 SEMI-RECESSED FIRE EXT. CABINET
FEB	10 44 13.C01 FIRE EXT. BRACKET
DS	PREMANUFACTURED ALUMINUM DOWNSPOUT
EDF-1	ELECTRIC DRINKING FOUNTAIN. SEE PLUMBING.
EDF-2	ELECTRIC DRINKING FOUNTAIN. SEE PLUMBING.
EDF-3	ELECTRIC DRINKING FOUNTAIN WITH BOTTLE FILLER. SEE PLUMBING.
MBH-1	10 28 00.L01 MOP AND BROOM HOLDER (MBH-1)
CJ	CONTROL JOINT
EJ-#	07 95 00.### EXPANSION JOINT COVER (EJ-#)
E.P.	EMERGENCY PHONE SEE ELECTRICAL

GENERAL NOTES

A ALL INTERIOR AND EXTERIOR DIMENSIONS ARE TO FACE OF STUD, CMU, CONCRETE OR COLUMN CENTERLINE UNLESS NOTED OTHERWISE.

B UNLESS NOTED OTHERWISE, ALL OVERALL EXTERIOR DIMENSIONS INCLUDING BRICK MASONRY OPENINGS ARE TO FACE OF BRICK VENEER.

C WHERE INTERIOR FACE OF FINISH OR CLEAR DIMENSIONS ARE INDICATED FOR COORDINATION PURPOSES OR TO DESIGNATE REQUIRED CODE CLEARANCES, THE DIMENSION IS TYPICALLY DESIGNATED AS "FOF" (FACE OF FINISH) OR "CLEAR".

D PROVIDE COMPLETE FIRE STOP AT ALL STRUCTURAL, MECHANICAL AND ELECTRICAL PENETRATIONS THROUGH ALL FIRE RATED ASSEMBLIES. REFER TO SPECIFICATIONS FOR REQUIREMENTS.

E CONTRACTOR TO PROVIDE 12 GAGE METAL BLOCKING IN STUD WALLS FOR ANCHORAGE OF WALL MOUNTED ITEMS INCLUDING BUT NOT LIMITED TO TOILET ACCESSORIES, WALL CABINETS, WALL MOUNTED TV'S, SHELVING, TOILET PARTITIONS, OWNER FURNISHED EQUIPMENT INDICATED AND SIMILAR ITEMS. FOR TYPE B DWELLING UNITS, PROVIDE METAL BLOCKING IN WALLS FOR FUTURE INSTALLATIONS AS INDICATED. FOR WALL MOUNTED TV'S IN LOUNGES, PROVIDE METAL BLOCKING 24" ABOVE AND BELOW ELECTRICAL JUNCTION BOXES.

F AT ALL HOUSEKEEPING MOP SINKS, PROVIDE WALL PROTECTION WITH 22 GA. STAINLESS STEEL SKIRT 48" AFF AND 30" WIDE AT EACH WALL FROM CORNER, WITH BENT SEAM AT CORNER.

G IN GYPSUM WALLBOARD APPLICATIONS, INSTALL CONTROL JOINTS IN ACCORDANCE WITH ASTM C840 AT LOCATIONS AS INDICATED ON DRAWINGS BY "CJ".

H SHOWER UNITS SHALL BE GROUTED SOLID UNDERNEATH - FILL VOID BETWEEN FLOOR SLAB AND FLOOR OF SHOWER.

I PROVIDE 3/4" EXT. FIRE-RETARDANT-TREATED PLYWOOD BACKER PANELS FROM FLOOR TO 8'-0" AFF, LAYERED OVER GYPSUM BOARD, TO ALL WALLS AT ALL DATA AND ACCESS CONTROL ROOMS.

J PROVIDE MOP AND BROOM HOLDER WITH SHELF PER SPECIFICATION 102800 AND AS INDICATED BY "MBH-1" ABOVE ALL FLOOR SINKS AT HOUSEKEEPING CLOSETS, MOUNTED 60" AFF TO BOTTOM.

K REFER TO A026 FOR DESCRIPTION OF ALL PARTITION TYPES.

L REFER TO A300 SERIES DRAWINGS (ENLARGED PLANS) FOR CONTINUATION OF DIMENSIONS AND PARTITION TYPES.

M REFER TO A100 (1/8" FLOOR PLANS) SERIES DRAWINGS AND A300 SERIES DRAWINGS (ENLARGED PLANS) FOR PARTITION TYPE LOCATIONS.

N REFER TO LS SERIES DRAWING (LIFE SAFETY PLANS) FOR LOCATIONS OF FIRE RATED WALLS AND PARTITIONS.

O REFER TO A000 SERIES DRAWINGS FOR WINDOW TYPES AND DOOR TYPES, SCHEDULES AND DETAILS.

P REFER TO A000 SERIES DRAWINGS FOR INTERIOR FINISH SCHEDULES.

Q REFER TO A300 SERIES DRAWINGS (ENLARGED PLANS) FOR ADDITIONAL PLAN NOTES.

KEY PLAN

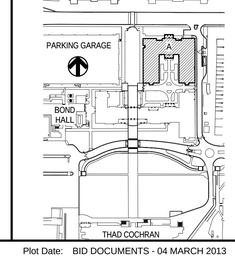

REGISTERED ARCHITECT
Thomas Hollaundsworth Jones
3449
Tupelo, MS
STATE OF MISSISSIPPI
04 March 2013

REGISTERED ELECTRICAL ENGINEER
MICHAEL EVANS
4283
04 MAR 2013
STATE OF MISSISSIPPI

THE McCARTY COMPANY
DESIGN GROUP, P.A.
TELEPHONE: (662) 844-4400
FAX: (662) 844-0500
OFFICE ADDRESS: 533 WEST MAIN STREET TUPELO, MS 38804
MAILING ADDRESS: P.O. BOX 440 TUPELO, MS 38802

DESIGN ARCHITECT
Hanbury Evans Wright Vlattas + Company
120 Atlantic Street
Norfolk, VA 23510
757.321.9600
www.hewv.com

PROJECT TITLE
USM - CENTURY PARK SOUTH
IHL# 208-297
HATTIESBURG, MISSISSIPPI

THE UNIVERSITY OF SOUTHERN MISSISSIPPI

PROJECT NO: 2012020
DRAWN BY: JCF, SOM
CHECKED BY: JPH, JTG
DATE ISSUED: 04 MAR 2013

REVISIONS & ADDENDUMS

SHEET TITLE
BUILDING A - SECOND FLOOR PLAN

SHEET NUMBER
A102A

3/11/2013 4:45:33 AM

Plot Date: BID DOCUMENTS - 04 MARCH 2013

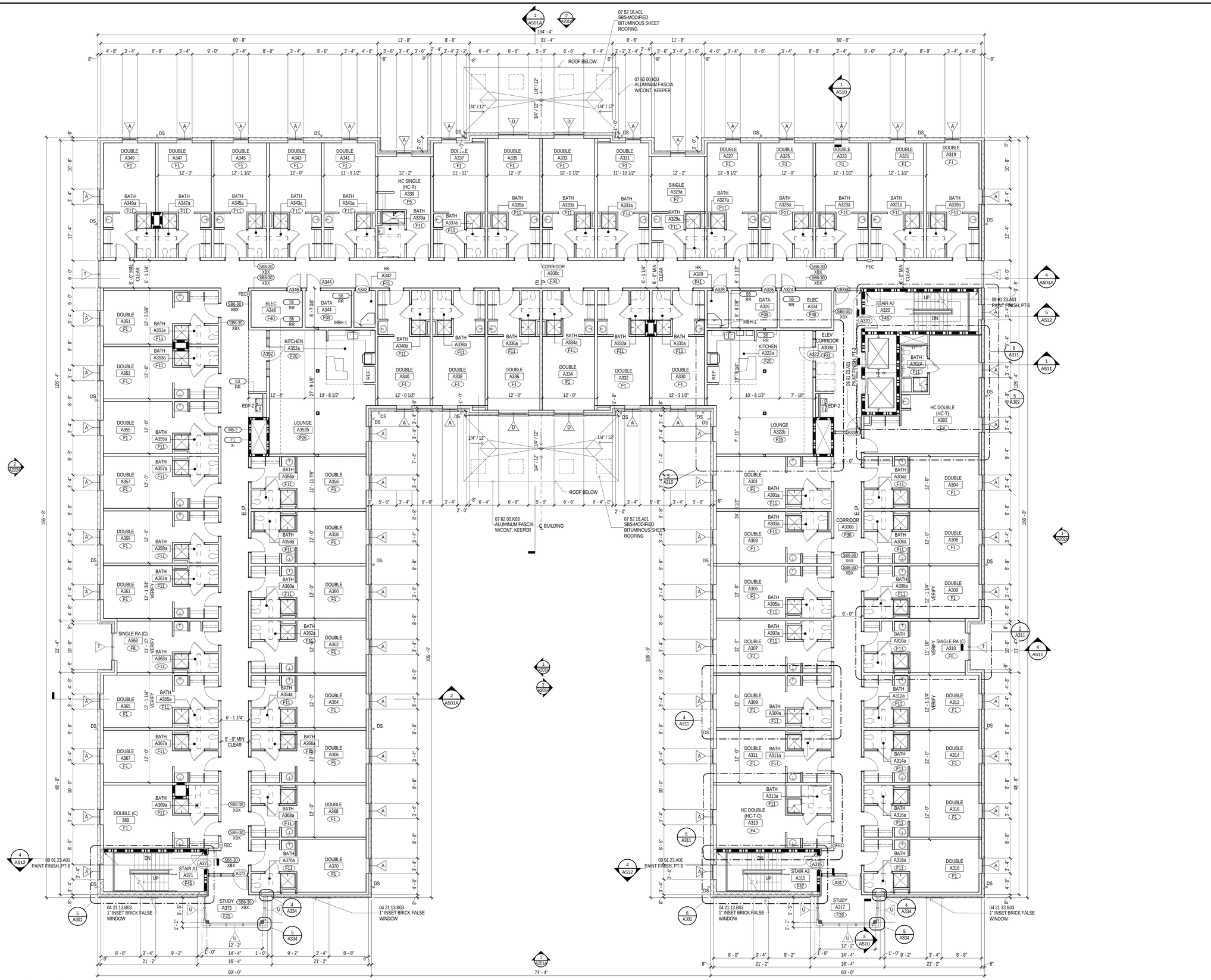

1 BUILDING A - THIRD - FOURTH FLOOR PLAN

1/8" = 1'-0"

23,516 GSF - FLOOR 117,938 GSF - BUILDING TOTAL 108 BEDS PER FLOOR

MATERIAL KEYING

04 21 13.B03	1" INSET BRICK FALSE WINDOW
07 52 16.A01	SBS-MODIFIED BITUMINOUS SHEET ROOFING
07 62 00.K03	ALUMINUM FASCIA W/CONT. KEEPER

LEGEND

FEC	10 44 13.B01 SEMI-RECESSED FIRE EXT. CABINET
FEB	10 44 13.C01 FIRE EXT. BRACKET
DS	PREMANUFACTURED ALUMINUM DOWNSPOUT
EDF-1	ELECTRIC DRINKING FOUNTAIN. SEE PLUMBING.
EDF-2	ELECTRIC DRINKING FOUNTAIN. SEE PLUMBING.
EDF-3	ELECTRIC DRINKING FOUNTAIN WITH BOTTLE FILLER. SEE PLUMBING.
MBH-1	10 28 00.L01 MOP AND BROOM HOLDER (MBH-1)
CJ	CONTROL JOINT
EJ-#	07 95 00.#### EXPANSION JOINT COVER (EJ-#)
E.P.	EMERGENCY PHONE SEE ELECTRICAL
RD	ROOF DRAIN - SEE PLUMBING

GENERAL NOTES

A ALL INTERIOR AND EXTERIOR DIMENSIONS ARE TO FACE OF STUD, CMU, CONCRETE OR COLUMN CENTERLINE UNLESS NOTED OTHERWISE.

B UNLESS NOTED OTHERWISE, ALL OVERALL EXTERIOR DIMENSIONS INCLUDING BRICK MASONRY OPENINGS ARE TO FACE OF BRICK VENEER.

C WHERE INTERIOR FACE OF FINISH OR CLEAR DIMENSIONS ARE INDICATED FOR COORDINATION PURPOSES OR TO DESIGNATE REQUIRED CODE CLEARANCES, THE DIMENSION IS TYPICALLY DESIGNATED AS "FOF" (FACE OF FINISH) OR "CLEAR".

D PROVIDE COMPLETE FIRE STOP AT ALL STRUCTURAL, MECHANICAL AND ELECTRICAL PENETRATIONS THROUGH ALL FIRE RATED ASSEMBLIES. REFER TO SPECIFICATIONS FOR REQUIREMENTS.

E CONTRACTOR TO PROVIDE 12 GAGE METAL BLOCKING IN STUD WALLS FOR ANCHORAGE OF WALL MOUNTED ITEMS INCLUDING BUT NOT LIMITED TO TOILET ACCESSORIES, WALL CABINETS, WALL MOUNTED TV'S, SHELVING, TOILET PARTITIONS, OWNER FURNISHED EQUIPMENT INDICATED AND SIMILAR ITEMS. FOR TYPE B DWELLING UNITS, PROVIDE METAL BLOCKING IN WALLS FOR FUTURE INSTALLATIONS AS INDICATED. FOR WALL MOUNTED TV'S IN LOUNGES, PROVIDE METAL BLOCKING 24" ABOVE AND BELOW ELECTRICAL JUNCTION BOXES.

F AT ALL HOUSEKEEPING MOP SINKS, PROVIDE WALL PROTECTION WITH 22 GA. STAINLESS STEEL SKIRT 48" AFF AND 30" WIDE AT EACH WALL FROM CORNER, WITH BENT SEAM AT CORNER.

G IN GYPSUM WALLBOARD APPLICATIONS, INSTALL CONTROL JOINTS IN ACCORDANCE WITH ASTM C840 AT LOCATIONS AS INDICATED ON DRAWINGS BY "CJ".

H SHOWER UNITS SHALL BE GROUTED SOLID UNDERNEATH - FILL VOID BETWEEN FLOOR SLAB AND FLOOR OF SHOWER.

I PROVIDE 3/4" EXT. FIRE-RETARDANT-TREATED PLYWOOD BACKER PANELS FROM FLOOR TO 8'-0" AFF, LAYERED OVER GYPSUM BOARD, TO ALL WALLS AT ALL DATA AND ACCESS CONTROL ROOMS.

J PROVIDE MOP AND BROOM HOLDER WITH SHELF PER SPECIFICATION 102800 AND AS INDICATED BY "MBH-1" ABOVE ALL FLOOR SINKS AT HOUSEKEEPING CLOSETS, MOUNTED 60" AFF TO BOTTOM.

K REFER TO A026 FOR DESCRIPTION OF ALL PARTITION TYPES.

L REFER TO A300 SERIES DRAWINGS (ENLARGED PLANS) FOR CONTINUATION OF DIMENSIONS AND PARTITION TYPES.

M REFER TO A100 (1/8" FLOOR PLANS) SERIES DRAWINGS AND A300 SERIES DRAWINGS (ENLARGED PLANS) FOR PARTITION TYPE LOCATIONS.

N REFER TO LS SERIES DRAWING (LIFE SAFETY PLANS) FOR LOCATIONS OF FIRE RATED WALLS AND PARTITIONS.

O REFER TO A000 SERIES DRAWINGS FOR WINDOW TYPES AND DOOR TYPES, SCHEDULES AND DETAILS.

P REFER TO A000 SERIES DRAWINGS FOR INTERIOR FINISH SCHEDULES.

Q REFER TO A300 SERIES DRAWINGS (ENLARGED PLANS) FOR ADDITIONAL PLAN NOTES.

KEY PLAN

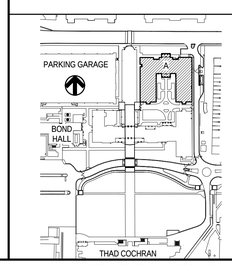

REGISTERED ARCHITECT
Hanbury Evans Wright Vlattas + Company
04 MARCH 2013
STATE OF MISSISSIPPI

MICHAEL EVANS
4283
04 MAR 2013
STATE OF MISSISSIPPI

THE McCARTY COMPANY
DESIGN GROUP, P.A.
TELEPHONE: (662) 844-4400
FAX: (662) 844-0500
OFFICE ADDRESS: 533 WEST MAIN STREET TUPELO, MS 38804
MAILING ADDRESS: P.O. BOX 440 TUPELO, MS 38802

DESIGN ARCHITECT
Hanbury Evans Wright Vlattas + Company
120 Atlantic Street
Norfolk, VA 23510
757.321.9600
www.hewv.com

PROJECT TITLE
USM - CENTURY PARK SOUTH
IHL# 208-297
HATTIESBURG, MISSISSIPPI

THE UNIVERSITY OF SOUTHERN MISSISSIPPI

PROJECT NO: 2012020
DRAWN BY: JCF, SOM
CHECKED BY: JPH, JTG
DATE ISSUED: 04 MAR 2013

REVISIONS & ADDENDUMS

SHEET TITLE
BUILDING A - THIRD - FOURTH FLOOR PLAN

SHEET NUMBER
A103A

3/11/2013 4:46:06 AM

Plot Date: BID DOCUMENTS - 04 MARCH 2013

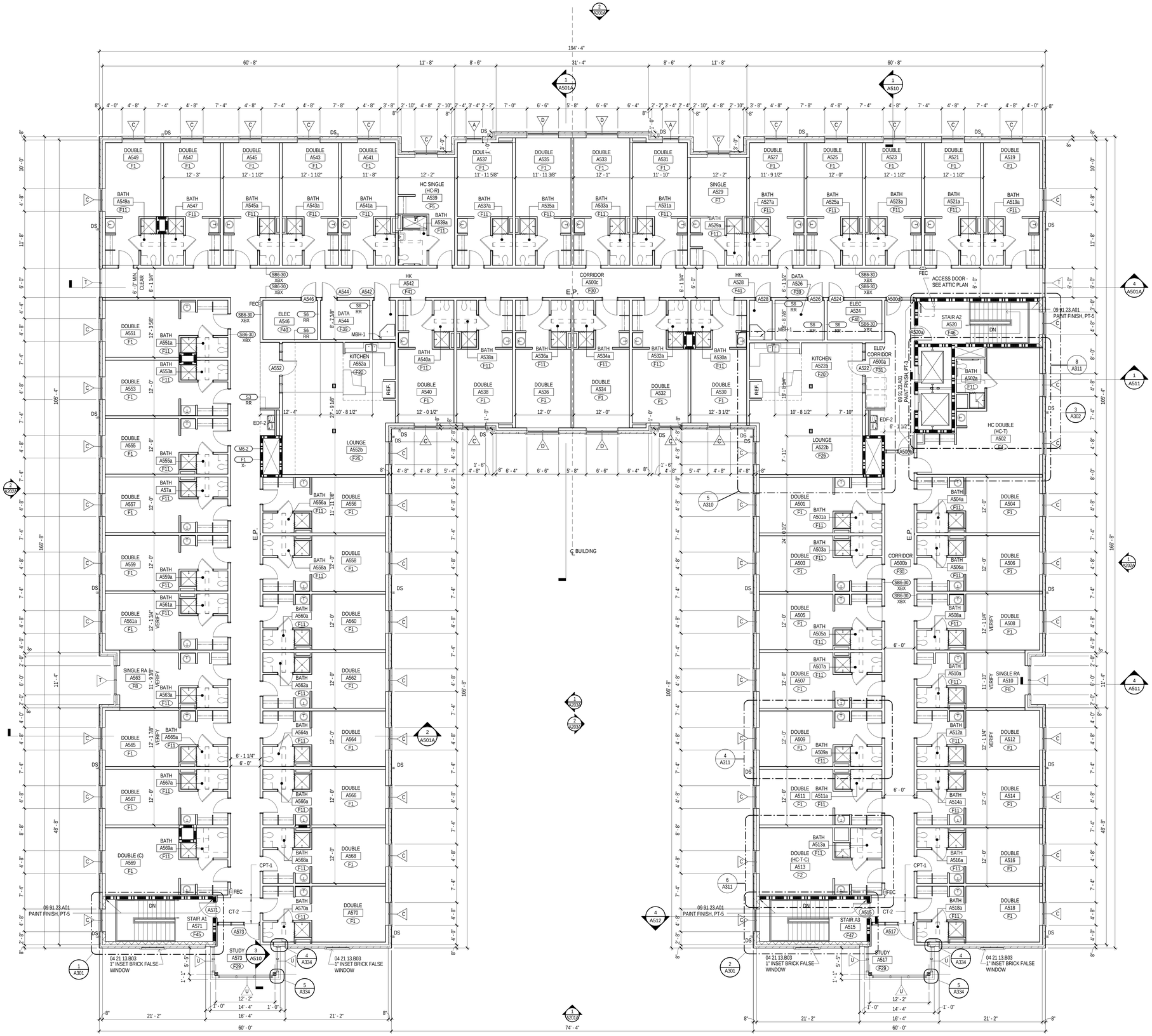

1 BUILDING A - FIFTH FLOOR PLAN

1/8" = 1'-0"

23,516 GSF - FLOOR 117,938 GSF - BUILDING TOTAL 108 BEDS THIS FLOOR

NORTH

MATERIAL KEYING

04 21 13.B03 1" INSET BRICK FALSE WINDOW

LEGEND (TMC)

FEC	10 44 13.B01 SEMI-RECESSED FIRE EXT. CABINET
FEB	10 44 13.C01 FIRE EXT. BRACKET
DS	PREMANUFACTURED ALUMINUM DOWNSPOUT
EDF-1	ELECTRIC DRINKING FOUNTAIN. SEE PLUMBING.
EDF-2	ELECTRIC DRINKING FOUNTAIN. SEE PLUMBING.
EDF-3	ELECTRIC DRINKING FOUNTAIN WITH BOTTLE FILLER. SEE PLUMBING.
MBH-1	10 28 00.L01 MOP AND BROOM HOLDER (MBH-1)
CJ	CONTROL JOINT
EJ-#	07 95 00.### EXPANSION JOINT COVER (EJ-#)
E.P.	EMERGENCY PHONE SEE ELECTRICAL

GENERAL NOTES

A ALL INTERIOR AND EXTERIOR DIMENSIONS ARE TO FACE OF STUD, CMU, CONCRETE OR COLUMN CENTERLINE UNLESS NOTED OTHERWISE.

B UNLESS NOTED OTHERWISE, ALL OVERALL EXTERIOR DIMENSIONS INCLUDING BRICK MASONRY OPENINGS ARE TO FACE OF BRICK VENEER.

C WHERE INTERIOR FACE OF FINISH OR CLEAR DIMENSIONS ARE INDICATED FOR COORDINATION PURPOSES OR TO DESIGNATE REQUIRED CODE CLEARANCES, THE DIMENSION IS TYPICALLY DESIGNATED AS "FOF" (FACE OF FINISH) OR "CLEAR".

D PROVIDE COMPLETE FIRE STOP AT ALL STRUCTURAL, MECHANICAL AND ELECTRICAL PENETRATIONS THROUGH ALL FIRE RATED ASSEMBLIES. REFER TO SPECIFICATIONS FOR REQUIREMENTS.

E CONTRACTOR TO PROVIDE 12 GAGE METAL BLOCKING IN STUD WALLS FOR ANCHORAGE OF WALL MOUNTED ITEMS INCLUDING BUT NOT LIMITED TO TOILET ACCESSORIES, WALL CABINETS, WALL MOUNTED TV'S, SHELVING, TOILET PARTITIONS, OWNER FURNISHED EQUIPMENT INDICATED AND SIMILAR ITEMS. FOR TYPE B DWELLING UNITS, PROVIDE METAL BLOCKING IN WALLS FOR FUTURE INSTALLATIONS AS INDICATED. FOR WALL MOUNTED TV'S IN LOUNGES, PROVIDE METAL BLOCKING 24" ABOVE AND BELOW ELECTRICAL JUNCTION BOXES.

F AT ALL HOUSEKEEPING MOP SINKS, PROVIDE WALL PROTECTION WITH 22 GA. STAINLESS STEEL SKIRT 48" AFF AND 30" WIDE AT EACH WALL FROM CORNER, WITH BENT SEAM AT CORNER.

G IN GYPSUM WALLBOARD APPLICATIONS, INSTALL CONTROL JOINTS IN ACCORDANCE WITH ASTM C840 AT LOCATIONS AS INDICATED ON DRAWINGS BY "CJ".

H SHOWER UNITS SHALL BE GROUTED SOLID UNDERNEATH - FILL VOID BETWEEN FLOOR SLAB AND FLOOR OF SHOWER.

I PROVIDE 3/4" EXT. FIRE-RETARDANT-TREATED PLYWOOD BACKER PANELS FROM FLOOR TO 8'-0" AFF, LAYERED OVER GYPSUM BOARD, TO ALL WALLS AT ALL DATA AND ACCESS CONTROL ROOMS.

J PROVIDE MOP AND BROOM HOLDER WITH SHELF PER SPECIFICATION 102800 AND AS INDICATED BY "MBH-1" ABOVE ALL FLOOR SINKS AT HOUSEKEEPING CLOSETS, MOUNTED 60" AFF TO BOTTOM.

K REFER TO A026 FOR DESCRIPTION OF ALL PARTITION TYPES.

L REFER TO A300 SERIES DRAWINGS (ENLARGED PLANS) FOR CONTINUATION OF DIMENSIONS AND PARTITION TYPES.

M REFER TO A100 (1/8" FLOOR PLANS) SERIES DRAWINGS AND A300 SERIES DRAWINGS (ENLARGED PLANS) FOR PARTITION TYPE LOCATIONS.

N REFER TO LS SERIES DRAWING (LIFE SAFETY PLANS) FOR LOCATIONS OF FIRE RATED WALLS AND PARTITIONS.

O REFER TO A000 SERIES DRAWINGS FOR WINDOW TYPES AND DOOR TYPES, SCHEDULES AND DETAILS.

P REFER TO A000 SERIES DRAWINGS FOR INTERIOR FINISH SCHEDULES.

Q REFER TO A300 SERIES DRAWINGS (ENLARGED PLANS) FOR ADDITIONAL PLAN NOTES.

KEY PLAN

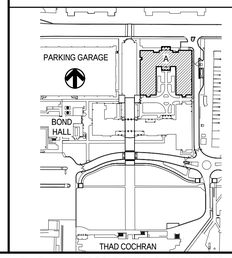

REGISTERED ARCHITECT
Thomas Michael Saunders
3482
Tupelo, MS
STATE OF MISSISSIPPI
04 MARCH 2013

MICHAEL EVANS
4283
04 MAR 2013
STATE OF MISSISSIPPI

THE McCARTY COMPANY
DESIGN GROUP, P.A.
TELEPHONE: (662) 844-4400
FAX: (662) 844-0500
OFFICE ADDRESS: 533 WEST MAIN STREET TUPELO, MS 38804
MAILING ADDRESS: P.O. BOX 440 TUPELO, MS 38802

DESIGN ARCHITECT
Hanbury Evans Wright Vlattas + Company
120 Atlantic Street
Norfolk, VA 23510
757.321.9600
www.hewv.com

PROJECT TITLE
USM - CENTURY PARK SOUTH
IHL# 208-297
HATTIESBURG, MISSISSIPPI

THE UNIVERSITY OF SOUTHERN MISSISSIPPI

PROJECT NO: 2012020
DRAWN BY: JCF
CHECKED BY: JPH
DATE ISSUED: 04 MAR 2013

REVISIONS & ADDENDUMS

SHEET TITLE
BUILDING A - FIFTH FLOOR PLAN

SHEET NUMBER
A105A

3/11/2013 4:46:33 AM

Plot Date: BID DOCUMENTS - 04 MARCH 2013

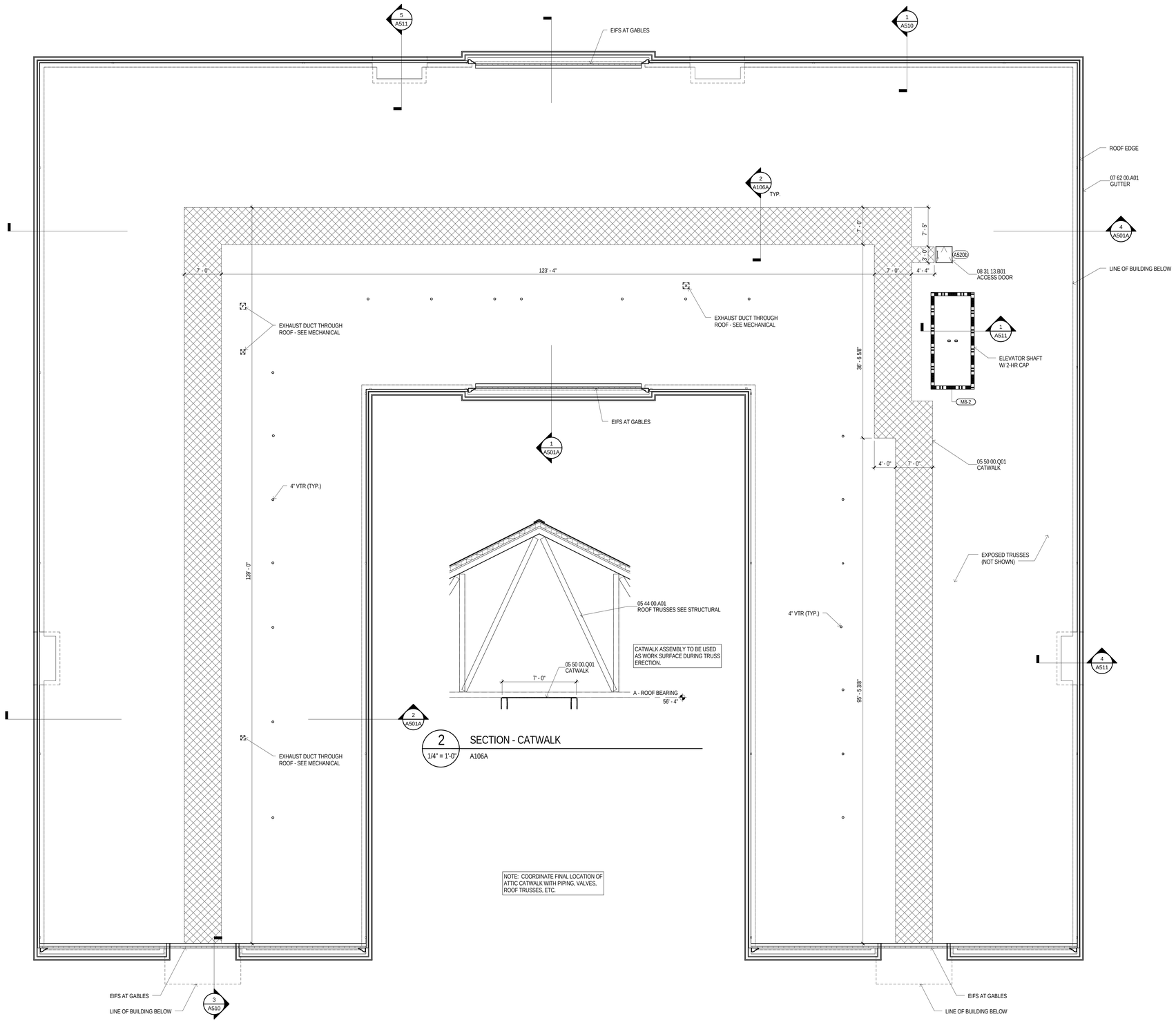

2 SECTION - CATWALK
1/4" = 1'-0"
A106A

NOTE: COORDINATE FINAL LOCATION OF ATTIC CATWALK WITH PIPING, VALVES, ROOF TRUSSES, ETC.

1 BUILDING A - ATTIC PLAN
1/8" = 1'-0"
NORTH

MATERIAL KEYING

05 44 00.A01	ROOF TRUSSES SEE STRUCTURAL
05 50 00.Q01	CATWALK
07 62 00.A01	GUTTER
08 31 13.B01	ACCESS DOOR

GENERAL NOTES

A ALL INTERIOR AND EXTERIOR DIMENSIONS ARE TO FACE OF STUD, CMU, CONCRETE OR COLUMN CENTERLINE UNLESS NOTED OTHERWISE.

B UNLESS NOTED OTHERWISE, ALL OVERALL EXTERIOR DIMENSIONS INCLUDING BRICK MASONRY OPENINGS ARE TO FACE OF BRICK VENEER.

C WHERE INTERIOR FACE OF FINISH OR CLEAR DIMENSIONS ARE INDICATED FOR COORDINATION PURPOSES OR TO DESIGNATE REQUIRED CODE CLEARANCES, THE DIMENSION IS TYPICALLY DESIGNATED AS "FOF" (FACE OF FINISH) OR "CLEAR".

D PROVIDE COMPLETE FIRE STOP AT ALL STRUCTURAL, MECHANICAL AND ELECTRICAL PENETRATIONS THROUGH ALL FIRE RATED ASSEMBLIES. REFER TO SPECIFICATIONS FOR REQUIREMENTS.

E CONTRACTOR TO PROVIDE 12 GAGE METAL BLOCKING IN STUD WALLS FOR ANCHORAGE OF WALL MOUNTED ITEMS INCLUDING BUT NOT LIMITED TO TOILET ACCESSORIES, WALL CABINETS, WALL MOUNTED TV'S, SHELVING, TOILET PARTITIONS, OWNER FURNISHED EQUIPMENT INDICATED AND SIMILAR ITEMS. FOR TYPE B DWELLING UNITS, PROVIDE METAL BLOCKING IN WALLS FOR FUTURE INSTALLATIONS AS INDICATED. FOR WALL MOUNTED TV'S IN LOUNGES, PROVIDE METAL BLOCKING 24" ABOVE AND BELOW ELECTRICAL JUNCTION BOXES.

F AT ALL HOUSEKEEPING MOP SINKS, PROVIDE WALL PROTECTION WITH 22 GA. STAINLESS STEEL SKIRT 48" AFF AND 30" WIDE AT EACH WALL FROM CORNER, WITH BENT SEAM AT CORNER.

G IN GYPSUM WALLBOARD APPLICATIONS, INSTALL CONTROL JOINTS IN ACCORDANCE WITH ASTM C840 AT LOCATIONS AS INDICATED ON DRAWINGS BY "CJ".

H SHOWER UNITS SHALL BE GROUTED SOLID UNDERNEATH - FILL VOID BETWEEN FLOOR SLAB AND FLOOR OF SHOWER.

I PROVIDE 3/4" EXT. FIRE-RETARDANT-TREATED PLYWOOD BACKER PANELS FROM FLOOR TO 8'-0" AFF, LAYERED OVER GYPSUM BOARD, TO ALL WALLS AT ALL DATA AND ACCESS CONTROL ROOMS.

J PROVIDE MOP AND BROOM HOLDER WITH SHELF PER SPECIFICATION 102800 AND AS INDICATED BY "MBH-1" ABOVE ALL FLOOR SINKS AT HOUSEKEEPING CLOSETS, MOUNTED 60" AFF TO BOTTOM.

K REFER TO A026 FOR DESCRIPTION OF ALL PARTITION TYPES.

L REFER TO A300 SERIES DRAWINGS (ENLARGED PLANS) FOR CONTINUATION OF DIMENSIONS AND PARTITION TYPES.

M REFER TO A100 (1/8" FLOOR PLANS) SERIES DRAWINGS AND A300 SERIES DRAWINGS (ENLARGED PLANS) FOR PARTITION TYPE LOCATIONS.

N REFER TO LS SERIES DRAWING (LIFE SAFETY PLANS) FOR LOCATIONS OF FIRE RATED WALLS AND PARTITIONS.

O REFER TO A000 SERIES DRAWINGS FOR WINDOW TYPES AND DOOR TYPES, SCHEDULES AND DETAILS.

P REFER TO A000 SERIES DRAWINGS FOR INTERIOR FINISH SCHEDULES.

Q REFER TO A300 SERIES DRAWINGS (ENLARGED PLANS) FOR ADDITIONAL PLAN NOTES.

KEY PLAN

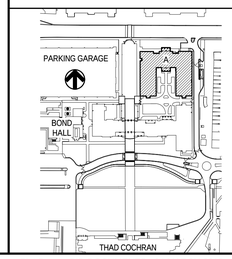

REGISTERED ARCHITECT
Thomas Alexander Saunders
3487
Tupelo, MS
STATE OF MISSISSIPPI
04 March 2013

REGISTERED ELECTRICAL ENGINEER
MICHAEL EVANS
4283
04 MAR 2013
STATE OF MISSISSIPPI

THE McCARTY COMPANY
DESIGN GROUP, P.A.
MAILING ADDRESS:
P.O. BOX 440
TUPELO, MS 38802
OFFICE ADDRESS:
533 WEST MAIN STREET
TUPELO, MS 38804
TELEPHONE:
(662) 844-4400
FAX:
(662) 844-0500

DESIGN ARCHITECT
Hanbury Evans Wright Vlattas + Company
120 Atlantic Street
Norfolk, VA 23510
757.321.9600
www.hewv.com

PROJECT TITLE
USM - CENTURY PARK SOUTH
IHL# 208-297
HATTIESBURG, MISSISSIPPI

THE UNIVERSITY OF SOUTHERN MISSISSIPPI

PROJECT NO:
- 2012020

DRAWN BY:
- BKS

CHECKED BY:
- JPH

DATE ISSUED:
- 04 MAR 2013

REVISIONS & ADDENDUMS

SHEET TITLE
BUILDING A - ATTIC PLAN

SHEET NUMBER
A106A

3/11/2013 4:47:28 AM

Plot Date: BID DOCUMENTS - 04 MARCH 2013

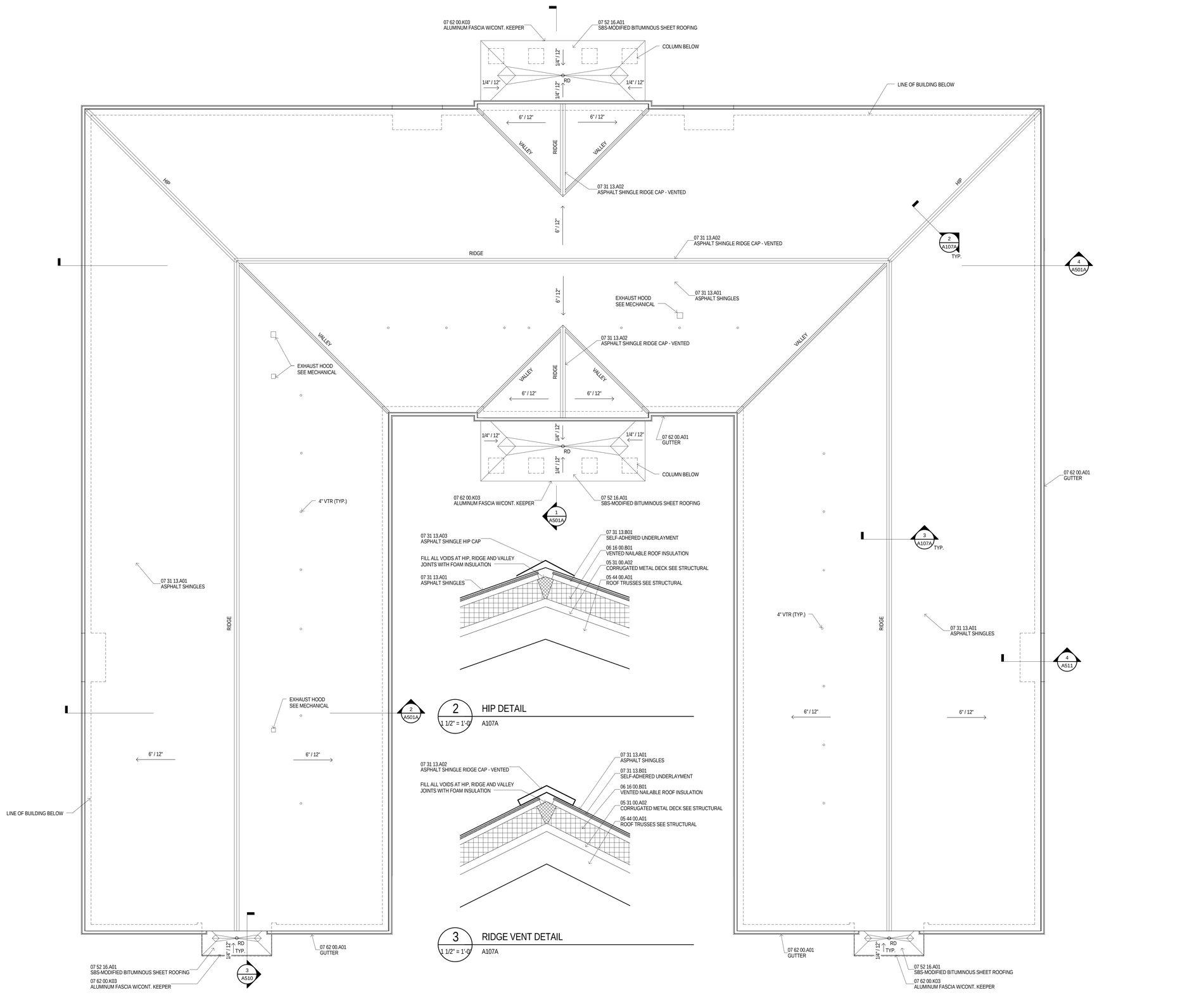

2 HIP DETAIL
1 1/2" = 1'-0" A107A

3 RIDGE VENT DETAIL
1 1/2" = 1'-0" A107A

1 BUILDING A - ROOF PLAN
1/8" = 1'-0"

NORTH

0' 8' 16' 24'

MATERIAL KEYING

05 31 00.A02	CORRUGATED METAL DECK SEE STRUCTURAL
05 44 00.A01	ROOF TRUSSES SEE STRUCTURAL
06 16 00.B01	VENTED NAILABLE ROOF INSULATION
07 31 13.A01	ASPHALT SHINGLES
07 31 13.A02	ASPHALT SHINGLE RIDGE CAP - VENTED
07 31 13.A03	ASPHALT SHINGLE HIP CAP
07 31 13.B01	SELF-ADHERED UNDERLAYMENT
07 52 16.A01	SBS-MODIFIED BITUMINOUS SHEET ROOFING
07 62 00.A01	GUTTER
07 62 00.K03	ALUMINUM FASCIA W/CONT. KEEPER

LEGEND

RD	ROOF DRAIN - SEE PLUMBING

GENERAL NOTES

A ALL INTERIOR AND EXTERIOR DIMENSIONS ARE TO FACE OF STUD, CMU, CONCRETE OR COLUMN CENTERLINE UNLESS NOTED OTHERWISE.

B UNLESS NOTED OTHERWISE, ALL OVERALL EXTERIOR DIMENSIONS INCLUDING BRICK MASONRY OPENINGS ARE TO FACE OF BRICK VENEER.

C WHERE INTERIOR FACE OF FINISH OR CLEAR DIMENSIONS ARE INDICATED FOR COORDINATION PURPOSES OR TO DESIGNATE REQUIRED CODE CLEARANCES, THE DIMENSION IS TYPICALLY DESIGNATED AS "FOF" (FACE OF FINISH) OR "CLEAR".

D PROVIDE COMPLETE FIRE STOP AT ALL STRUCTURAL, MECHANICAL AND ELECTRICAL PENETRATIONS THROUGH ALL FIRE RATED ASSEMBLIES. REFER TO SPECIFICATIONS FOR REQUIREMENTS.

E CONTRACTOR TO PROVIDE 12 GAGE METAL BLOCKING IN STUD WALLS FOR ANCHORAGE OF WALL MOUNTED ITEMS INCLUDING BUT NOT LIMITED TO TOILET ACCESSORIES, WALL CABINETS, WALL MOUNTED TV'S, SHELVING, TOILET PARTITIONS, OWNER FURNISHED EQUIPMENT INDICATED AND SIMILAR ITEMS. FOR TYPE B DWELLING UNITS, PROVIDE METAL BLOCKING IN WALLS FOR FUTURE INSTALLATIONS AS INDICATED. FOR WALL MOUNTED TV'S IN LOUNGES, PROVIDE METAL BLOCKING 24" ABOVE AND BELOW ELECTRICAL JUNCTION BOXES.

F AT ALL HOUSEKEEPING MOP SINKS, PROVIDE WALL PROTECTION WITH 22 GA. STAINLESS STEEL SKIRT 48" AFF AND 30" WIDE AT EACH WALL FROM CORNER, WITH BENT SEAM AT CORNER.

G IN GYPSUM WALLBOARD APPLICATIONS, INSTALL CONTROL JOINTS IN ACCORDANCE WITH ASTM C840 AT LOCATIONS AS INDICATED ON DRAWINGS BY "CJ".

H SHOWER UNITS SHALL BE GROUTED SOLID UNDERNEATH - FILL VOID BETWEEN FLOOR SLAB AND FLOOR OF SHOWER.

I PROVIDE 3/4" EXT. FIRE-RETARDANT-TREATED PLYWOOD BACKER PANELS FROM FLOOR TO 8'-0" AFF, LAYERED OVER GYPSUM BOARD, TO ALL WALLS AT ALL DATA AND ACCESS CONTROL ROOMS.

J PROVIDE MOP AND BROOM HOLDER WITH SHELF PER SPECIFICATION 102800 AND AS INDICATED BY "MBH-1" ABOVE ALL FLOOR SINKS AT HOUSEKEEPING CLOSETS, MOUNTED 60" AFF TO BOTTOM.

K REFER TO A026 FOR DESCRIPTION OF ALL PARTITION TYPES.

L REFER TO A300 SERIES DRAWINGS (ENLARGED PLANS) FOR CONTINUATION OF DIMENSIONS AND PARTITION TYPES.

M REFER TO A100 (1/8" FLOOR PLANS) SERIES DRAWINGS AND A300 SERIES DRAWINGS (ENLARGED PLANS) FOR PARTITION TYPE LOCATIONS.

N REFER TO LS SERIES DRAWING (LIFE SAFETY PLANS) FOR LOCATIONS OF FIRE RATED WALLS AND PARTITIONS.

O REFER TO A000 SERIES DRAWINGS FOR WINDOW TYPES AND DOOR TYPES, SCHEDULES AND DETAILS.

P REFER TO A000 SERIES DRAWINGS FOR INTERIOR FINISH SCHEDULES.

Q REFER TO A300 SERIES DRAWINGS (ENLARGED PLANS) FOR ADDITIONAL PLAN NOTES.

KEY PLAN

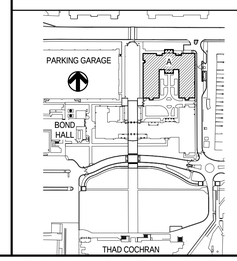

REGISTERED ARCHITECT
Thomas Bernard Saunders
3482
Tupelo, MS
STATE OF MISSOURI
04 march 2013

REGISTERED ARCHITECT
MICHAEL EVANS
4283
04 MAR 2013
STATE OF MISSISSIPPI

THE McCARTY COMPANY
DESIGN GROUP, P.A.
MAILING ADDRESS: P.O. BOX 440 TUPELO, MS 38802
OFFICE ADDRESS: 533 WEST MAIN STREET TUPELO, MS 38804
TELEPHONE: (662) 844-4400
FAX: (662) 844-0500

DESIGN ARCHITECT
Hanbury Evans Wright Vlattas + Company
120 Atlantic Street
Norfolk, VA 23510
757.321.9600
www.hewv.com

PROJECT TITLE
USM - CENTURY PARK SOUTH
IHL# 208-297
HATTIESBURG, MISSISSIPPI

THE UNIVERSITY OF SOUTHERN MISSISSIPPI

PROJECT NO: 2012020
DRAWN BY: BKS
CHECKED BY: JPH
DATE ISSUED: 04 MAR 2013

REVISIONS & ADDENDUMS

SHEET TITLE
BUILDING A - ROOF PLAN

SHEET NUMBER
A107A

3/11/2013 4:48:39 AM

Plot Date: BID DOCUMENTS - 04 MARCH 2013

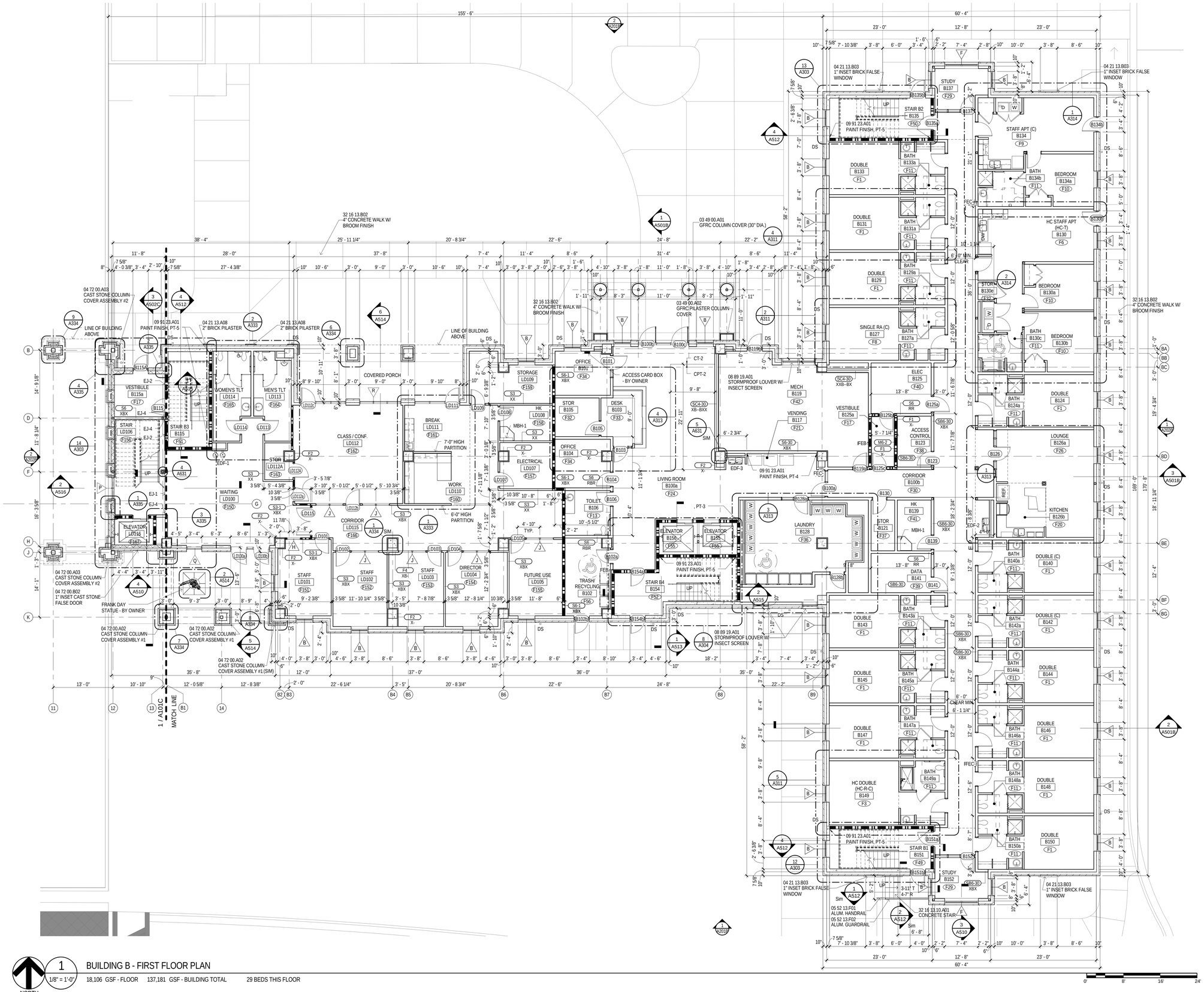

1 / A101B

BUILDING B - FIRST FLOOR PLAN

1/8" = 1'-0"

NORTH

18,106 GSF - FLOOR 137,181 GSF - BUILDING TOTAL 29 BEDS THIS FLOOR

3/11/2013 5:20:45 AM

MATERIAL KEYING

03 49 00.A01	GFRC COLUMN COVER (30" DIA.)
03 49 00.A02	GFRC PILASTER COLUMN COVER
04 21 13.A08	2" BRICK PILASTER
04 21 13.B03	1" INSET BRICK FALSE WINDOW
04 72 00.A02	CAST STONE COLUMN COVER ASSEMBLY #1
04 72 00.A03	CAST STONE COLUMN COVER ASSEMBLY #2
04 72 00.B02	1" INSET CAST STONE FALSE DOOR
05 52 13.F01	ALUM. HANDRAIL
05 52 13.F02	ALUM. GUARDRAIL
08 89 19.A01	STORMPROOF LOUVER W/ INSECT SCREEN
32 16 13.10.A01	CONCRETE STAIR
32 16 13.B02	4" CONCRETE WALK W/ BROOM FINISH

LEGEND

FEC	10 44 13.B01 SEMI-RECESSED FIRE EXT. CABINET
FEB	10 44 13.C01 FIRE EXT. BRACKET
DS	PREMANUFACTURED ALUMINUM DOWNSPOUT
EDF-1	ELECTRIC DRINKING FOUNTAIN. SEE PLUMBING.
EDF-2	ELECTRIC DRINKING FOUNTAIN. SEE PLUMBING.
EDF-3	ELECTRIC DRINKING FOUNTAIN WITH BOTTLE FILLER. SEE PLUMBING.
MBH-1	10 28 00.L01 MOP AND BROOM HOLDER (MBH-1)
CJ	CONTROL JOINT
EJ-#	07 95 00.### EXPANSION JOINT COVER (EJ-#)
E.P.	EMERGENCY PHONE SEE ELECTRICAL

GENERAL NOTES

A ALL INTERIOR AND EXTERIOR DIMENSIONS ARE TO FACE OF STUD, CMU, CONCRETE OR COLUMN CENTERLINE UNLESS NOTED OTHERWISE.

B UNLESS NOTED OTHERWISE, ALL OVERALL EXTERIOR DIMENSIONS INCLUDING BRICK MASONRY OPENINGS ARE TO FACE OF BRICK VENEER.

C WHERE INTERIOR FACE OF FINISH OR CLEAR DIMENSIONS ARE INDICATED FOR COORDINATION PURPOSES OR TO DESIGNATE REQUIRED CODE CLEARANCES, THE DIMENSION IS TYPICALLY DESIGNATED AS "FOF" (FACE OF FINISH) OR "CLEAR".

D PROVIDE COMPLETE FIRE STOP AT ALL STRUCTURAL, MECHANICAL AND ELECTRICAL PENETRATIONS THROUGH ALL FIRE RATED ASSEMBLIES. REFER TO SPECIFICATIONS FOR REQUIREMENTS.

E CONTRACTOR TO PROVIDE 12 GAGE METAL BLOCKING IN STUD WALLS FOR ANCHORAGE OF WALL MOUNTED ITEMS INCLUDING BUT NOT LIMITED TO TOILET ACCESSORIES, WALL CABINETS, WALL MOUNTED TV'S, SHELVING, TOILET PARTITIONS, OWNER FURNISHED EQUIPMENT INDICATED AND SIMILAR ITEMS. FOR TYPE B DWELLING UNITS, PROVIDE METAL BLOCKING IN WALLS FOR FUTURE INSTALLATIONS AS INDICATED. FOR WALL MOUNTED TV'S IN LOUNGES, PROVIDE METAL BLOCKING 24" ABOVE AND BELOW ELECTRICAL JUNCTION BOXES.

F AT ALL HOUSEKEEPING MOP SINKS, PROVIDE WALL PROTECTION WITH 22 GA. STAINLESS STEEL SKIRT 48" AFF AND 30" WIDE AT EACH WALL FROM CORNER, WITH BENT SEAM AT CORNER.

G IN GYPSUM WALLBOARD APPLICATIONS, INSTALL CONTROL JOINTS IN ACCORDANCE WITH ASTM C840 AT LOCATIONS AS INDICATED ON DRAWINGS BY "CJ".

H SHOWER UNITS SHALL BE GROUTED SOLID UNDERNEATH - FILL VOID BETWEEN FLOOR SLAB AND FLOOR OF SHOWER.

I PROVIDE 3/4" EXT. FIRE-RETARDANT-TREATED PLYWOOD BACKER PANELS FROM FLOOR TO 8'-0" AFF, LAYERED OVER GYPSUM BOARD, TO ALL WALLS AT ALL DATA AND ACCESS CONTROL ROOMS. PLYWOOD TO BE PAINTED WALL COLOR.

J PROVIDE MOP AND BROOM HOLDER WITH SHELF PER SPECIFICATION 102800 AND AS INDICATED BY "MBH-1" ABOVE ALL FLOOR SINKS AT HOUSEKEEPING CLOSETS, MOUNTED 60" AFF TO BOTTOM.

K REFER TO A300 SERIES DRAWINGS (ENLARGED PLANS) FOR CONTINUATION OF DIMENSIONS AND PARTITION TYPES.

L REFER TO A026 FOR DESCRIPTION OF ALL PARTITION TYPES.

M REFER TO A100 (1/8" FLOOR PLANS) SERIES DRAWINGS AND A200 SERIES DRAWINGS (ENLARGED PLANS) FOR PARTITION TYPE LOCATIONS.

N REFER TO LS SERIES DRAWING (LIFE SAFETY PLANS) FOR LOCATIONS OF FIRE RATED WALLS AND PARTITIONS.

O REFER TO A000 SERIES DRAWINGS FOR WINDOW TYPES AND DOOR TYPES, SCHEDULES AND DETAILS.

P REFER TO A000 SERIES DRAWINGS FOR INTERIOR FINISH SCHEDULES.

Q REFER TO A300 SERIES DRAWINGS (ENLARGED PLANS) FOR ADDITIONAL PLAN NOTES.

KEY PLAN

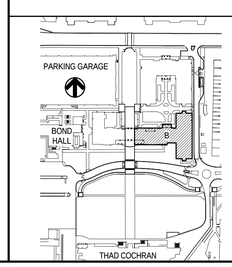

REGISTERED ARCHITECT
Thad Cochran Boulevard
Tupelo, MS
STATE OF MISSISSIPPI
04 MARCH 2013

MICHAEL EVANS
4283
04 MAR 2013
STATE OF MISSISSIPPI

THE McCARTY COMPANY
DESIGN GROUP, P.A.
TELEPHONE: (662) 844-4400
FAX: (662) 844-0500
OFFICE ADDRESS: 533 WEST MAIN STREET TUPELO, MS 38804
MAILING ADDRESS: P.O. BOX 440 TUPELO, MS 38802

DESIGN ARCHITECT
Hanbury Evans Wright Vlattas + Company
120 Atlantic Street
Norfolk, VA 23510
757.321.9600
www.hewv.com

PROJECT TITLE
USM - CENTURY PARK SOUTH
IHL# 208-297
HATTIESBURG, MISSISSIPPI

THE UNIVERSITY OF SOUTHERN MISSISSIPPI

PROJECT NO: 2012020
DRAWN BY: JCF, SOM
CHECKED BY: JPH, JTG
DATE ISSUED: 04 MAR 2013

REVISIONS & ADDENDUMS

SHEET TITLE
BUILDING B - FIRST FLOOR PLAN

SHEET NUMBER
A101B

Plot Date: BID DOCUMENTS - 04 MAR 2013

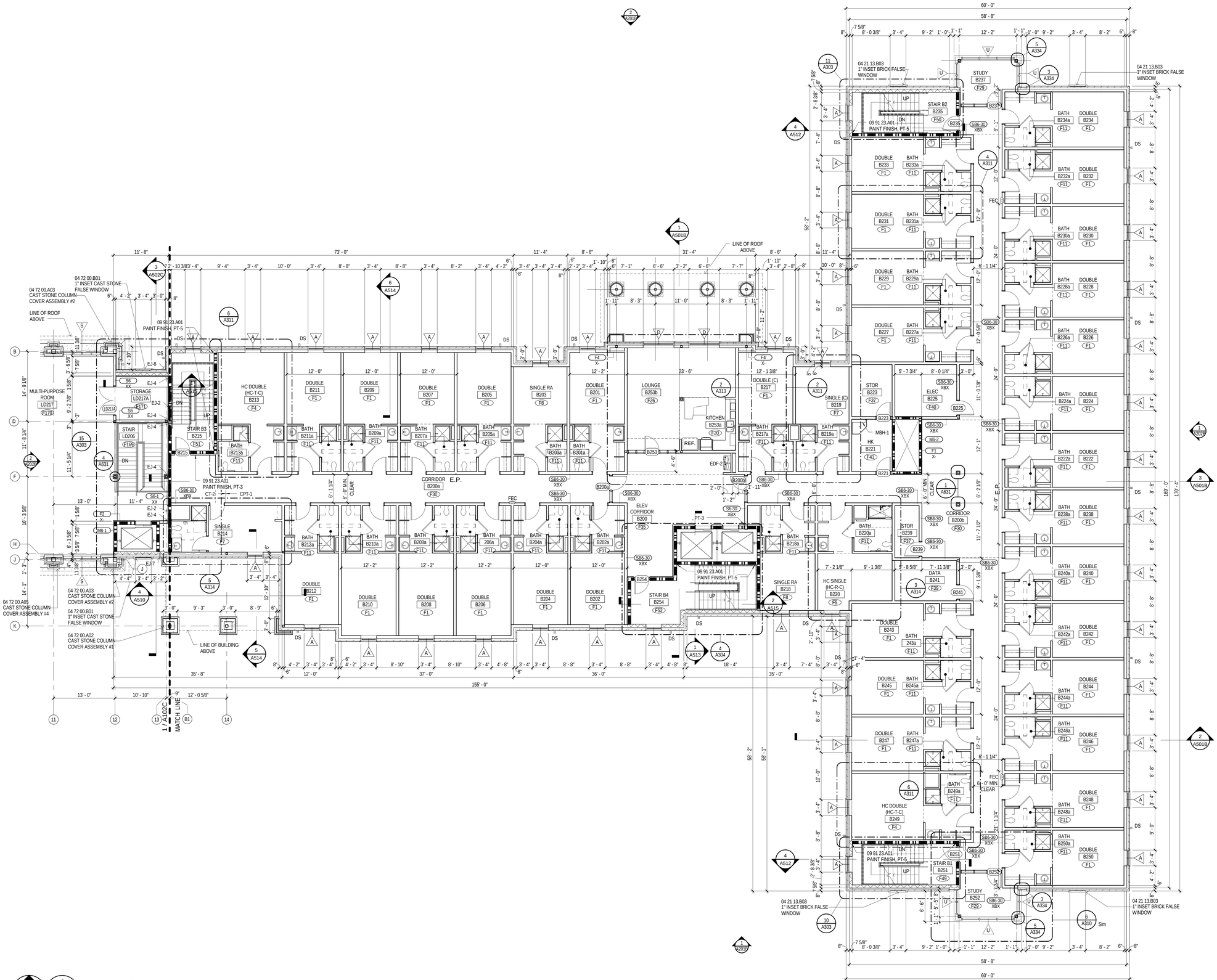

1 BUILDING B - SECOND FLOOR PLAN

17,623 GSF - FLOOR 137,181 GSF - BUILDING TOTAL 75 BEDS THIS FLOOR

MATERIAL KEYING

04 21 13.B03	1" INSET BRICK FALSE WINDOW
04 72 00.A02	CAST STONE COLUMN COVER ASSEMBLY #1
04 72 00.A03	CAST STONE COLUMN COVER ASSEMBLY #2
04 72 00.A05	CAST STONE COLUMN COVER ASSEMBLY #4
04 72 00.B01	1" INSET CAST STONE FALSE WINDOW

LEGEND

FEC	10 44 13.B01 SEMI-RECESSED FIRE EXT. CABINET
FEB	10 44 13.C01 FIRE EXT. BRACKET
DS	PREMANUFACTURED ALUMINUM DOWNSPOUT
EDF-1	ELECTRIC DRINKING FOUNTAIN. SEE PLUMBING.
EDF-2	ELECTRIC DRINKING FOUNTAIN. SEE PLUMBING.
EDF-3	ELECTRIC DRINKING FOUNTAIN WITH BOTTLE FILLER. SEE PLUMBING.
MBH-1	10 28 00.L01 MOP AND BROOM HOLDER (MBH-1)
CJ	CONTROL JOINT
EJ-#	07 95 00.### EXPANSION JOINT COVER (EJ-#)
E.P.	EMERGENCY PHONE SEE ELECTRICAL

GENERAL NOTES

A ALL INTERIOR AND EXTERIOR DIMENSIONS ARE TO FACE OF STUD, CMU, CONCRETE OR COLUMN CENTERLINE UNLESS NOTED OTHERWISE.

B UNLESS NOTED OTHERWISE, ALL OVERALL EXTERIOR DIMENSIONS INCLUDING BRICK MASONRY OPENINGS ARE TO FACE OF BRICK VENEER.

C WHERE INTERIOR FACE OF FINISH OR CLEAR DIMENSIONS ARE INDICATED FOR COORDINATION PURPOSES OR TO DESIGNATE REQUIRED CODE CLEARANCES, THE DIMENSION IS TYPICALLY DESIGNATED AS "FOF" (FACE OF FINISH) OR "CLEAR".

D PROVIDE COMPLETE FIRE STOP AT ALL STRUCTURAL, MECHANICAL AND ELECTRICAL PENETRATIONS THROUGH ALL FIRE RATED ASSEMBLIES. REFER TO SPECIFICATIONS FOR REQUIREMENTS.

E CONTRACTOR TO PROVIDE 12 GAGE METAL BLOCKING IN STUD WALLS FOR ANCHORAGE OF WALL MOUNTED ITEMS INCLUDING BUT NOT LIMITED TO TOILET ACCESSORIES, WALL CABINETS, WALL MOUNTED TV'S, SHELVING, TOILET PARTITIONS, OWNER FURNISHED EQUIPMENT INDICATED AND SIMILAR ITEMS. FOR TYPE B DWELLING UNITS, PROVIDE METAL BLOCKING IN WALLS FOR FUTURE INSTALLATIONS AS INDICATED. FOR WALL MOUNTED TV'S IN LOUNGES, PROVIDE METAL BLOCKING 24" ABOVE AND BELOW ELECTRICAL JUNCTION BOXES.

F AT ALL HOUSEKEEPING MOP SINKS, PROVIDE WALL PROTECTION WITH 22 GA. STAINLESS STEEL SKIRT 48" AFF AND 30" WIDE AT EACH WALL FROM CORNER, WITH BENT SEAM AT CORNER.

G IN GYPSUM WALLBOARD APPLICATIONS, INSTALL CONTROL JOINTS IN ACCORDANCE WITH ASTM C840 AT LOCATIONS AS INDICATED ON DRAWINGS BY "CJ".

H SHOWER UNITS SHALL BE GROUTED SOLID UNDERNEATH - FILL VOID BETWEEN FLOOR SLAB AND FLOOR OF SHOWER.

I PROVIDE 3/4" EXT. FIRE-RETARDANT-TREATED PLYWOOD BACKER PANELS FROM FLOOR TO 8'-0" AFF, LAYERED OVER GYPSUM BOARD, TO ALL WALLS AT ALL DATA AND ACCESS CONTROL ROOMS. PLYWOOD TO BE PAINTED WALL COLOR.

J PROVIDE MOP AND BROOM HOLDER WITH SHELF PER SPECIFICATION 102800 AND AS INDICATED BY "MBH-1" ABOVE ALL FLOOR SINKS AT HOUSEKEEPING CLOSETS, MOUNTED 60" AFF TO BOTTOM.

K REFER TO A300 SERIES DRAWINGS (ENLARGED PLANS) FOR CONTINUATION OF DIMENSIONS AND PARTITION TYPES.

L REFER TO A026 FOR DESCRIPTION OF ALL PARTITION TYPES.

M REFER TO A100 (1/8" FLOOR PLANS) SERIES DRAWINGS AND A300 SERIES DRAWINGS (ENLARGED PLANS) FOR PARTITION TYPE LOCATIONS.

N REFER TO LS SERIES DRAWING (LIFE SAFETY PLANS) FOR LOCATIONS OF FIRE RATED WALLS AND PARTITIONS.

O REFER TO A000 SERIES DRAWINGS FOR WINDOW TYPES AND DOOR TYPES, SCHEDULES AND DETAILS.

P REFER TO A000 SERIES DRAWINGS FOR INTERIOR FINISH SCHEDULES.

Q REFER TO A300 SERIES DRAWINGS (ENLARGED PLANS) FOR ADDITIONAL PLAN NOTES.

KEY PLAN

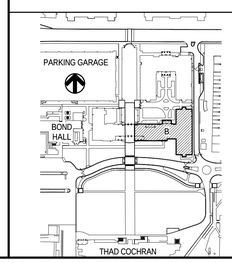

REGISTERED ARCHITECT
Thomas Alexander Saunders III
Tupelo, MS
STATE OF MISSISSIPPI
04 MARCH 2013

MICHAEL EVANS
4283
04 MAR 2013
STATE OF MISSISSIPPI

THE McCARTY COMPANY
DESIGN GROUP, P.A.
TELEPHONE: (662) 844-4400
FAX: (662) 844-0500
OFFICE ADDRESS: 533 WEST MAIN STREET TUPELO, MS 38804
MAILING ADDRESS: P.O. BOX 440 TUPELO, MS 38802

DESIGN ARCHITECT
Hanbury Evans Wright Vlattas + Company
120 Atlantic Street
Norfolk, VA 23510
757.321.9600
www.hewv.com

PROJECT TITLE
USM - CENTURY PARK SOUTH
IHL# 208-297
HATTIESBURG, MISSISSIPPI

THE UNIVERSITY OF SOUTHERN MISSISSIPPI

PROJECT NO: 2012020
DRAWN BY: JCF, SOM
CHECKED BY: JPH, JTG
DATE ISSUED: 04 MAR 2013

REVISIONS & ADDENDUMS

SHEET TITLE
BUILDING B - SECOND FLOOR PLAN

SHEET NUMBER
A102B

3/11/2013 5:22:35 AM

Plot Date: BID DOCUMENTS - 04 MAR 2013

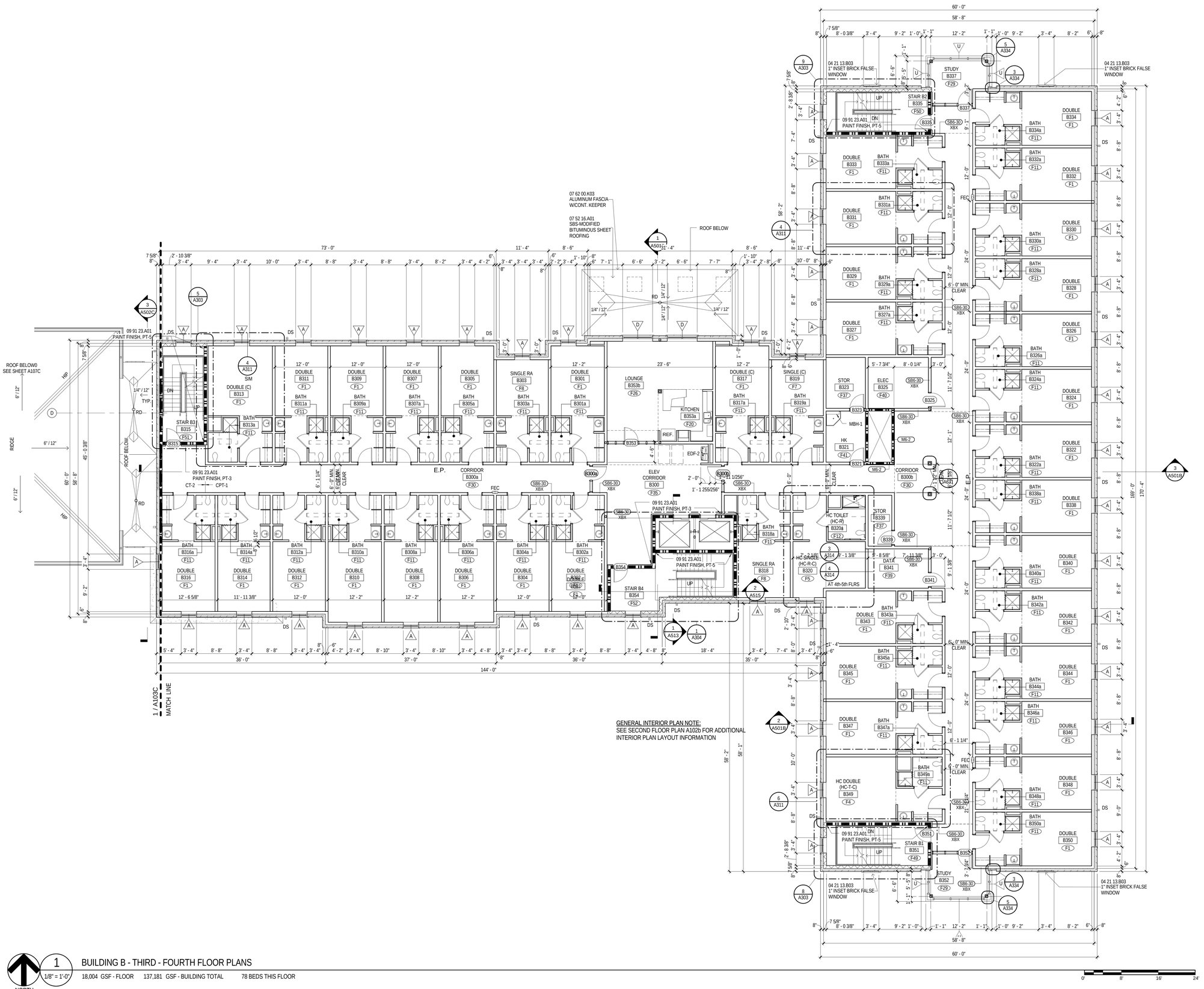

1 NORTH 1/8" = 1'-0"

BUILDING B - THIRD - FOURTH FLOOR PLANS

18,004 GSF - FLOOR 137,181 GSF - BUILDING TOTAL 78 BEDS THIS FLOOR

MATERIAL KEYING

04 21 13.B03	1" INSET BRICK FALSE WINDOW
07 52 16.A01	SBS-MODIFIED BITUMINOUS SHEET ROOFING
07 62 00.K03	ALUMINUM FASCIA W/CONT. KEEPER

LEGEND

FEC	10 44 13.B01 SEMI-RECESSED FIRE EXT. CABINET
FEB	10 44 13.C01 FIRE EXT. BRACKET
DS	PREMANUFACTURED ALUMINUM DOWNSPOUT
EDF-1	ELECTRIC DRINKING FOUNTAIN. SEE PLUMBING.
EDF-2	ELECTRIC DRINKING FOUNTAIN. SEE PLUMBING.
EDF-3	ELECTRIC DRINKING FOUNTAIN WITH BOTTLE FILLER. SEE PLUMBING.
MBH-1	10 28 00.L01 MOP AND BROOM HOLDER (MBH-1)
CJ	CONTROL JOINT
EJ-#	07 95 00.### EXPANSION JOINT COVER (EJ-#)
E.P.	EMERGENCY PHONE SEE ELECTRICAL
RD	ROOF DRAIN - SEE PLUMBING

GENERAL NOTES

A ALL INTERIOR AND EXTERIOR DIMENSIONS ARE TO FACE OF STUD, CMU, CONCRETE OR COLUMN CENTERLINE UNLESS NOTED OTHERWISE.

B UNLESS NOTED OTHERWISE, ALL OVERALL EXTERIOR DIMENSIONS INCLUDING BRICK MASONRY OPENINGS ARE TO FACE OF BRICK VENEER.

C WHERE INTERIOR FACE OF FINISH OR CLEAR DIMENSIONS ARE INDICATED FOR COORDINATION PURPOSES OR TO DESIGNATE REQUIRED CODE CLEARANCES, THE DIMENSION IS TYPICALLY DESIGNATED AS "FOF" (FACE OF FINISH) OR "CLEAR".

D PROVIDE COMPLETE FIRE STOP AT ALL STRUCTURAL, MECHANICAL AND ELECTRICAL PENETRATIONS THROUGH ALL FIRE RATED ASSEMBLIES. REFER TO SPECIFICATIONS FOR REQUIREMENTS.

E CONTRACTOR TO PROVIDE 12 GAGE METAL BLOCKING IN STUD WALLS FOR ANCHORAGE OF WALL MOUNTED ITEMS INCLUDING BUT NOT LIMITED TO TOILET ACCESSORIES, WALL CABINETS, WALL MOUNTED TV'S, SHELVING, TOILET PARTITIONS, OWNER FURNISHED EQUIPMENT INDICATED AND SIMILAR ITEMS. FOR TYPE B DWELLING UNITS, PROVIDE METAL BLOCKING IN WALLS FOR FUTURE INSTALLATIONS AS INDICATED. FOR WALL MOUNTED TV'S IN LOUNGES, PROVIDE METAL BLOCKING 24" ABOVE AND BELOW ELECTRICAL JUNCTION BOXES.

F AT ALL HOUSEKEEPING MOP SINKS, PROVIDE WALL PROTECTION WITH 22 GA. STAINLESS STEEL SKIRT 48" AFF AND 30" WIDE AT EACH WALL FROM CORNER, WITH BENT SEAM AT CORNER.

G IN GYPSUM WALLBOARD APPLICATIONS, INSTALL CONTROL JOINTS IN ACCORDANCE WITH ASTM C840 AT LOCATIONS AS INDICATED ON DRAWINGS BY "CJ".

H SHOWER UNITS SHALL BE GROUTED SOLID UNDERNEATH - FILL VOID BETWEEN FLOOR SLAB AND FLOOR OF SHOWER.

I PROVIDE 3/4" EXT. FIRE-RETARDANT-TREATED PLYWOOD BACKER PANELS FROM FLOOR TO 8'-0" AFF, LAYERED OVER GYPSUM BOARD, TO ALL WALLS AT ALL DATA AND ACCESS CONTROL ROOMS. PLYWOOD TO BE PAINTED WALL COLOR.

J PROVIDE MOP AND BROOM HOLDER WITH SHELF PER SPECIFICATION 102800 AND AS INDICATED BY "MBH-1" ABOVE ALL FLOOR SINKS AT HOUSEKEEPING CLOSETS, MOUNTED 60" AFF TO BOTTOM.

K REFER TO A300 SERIES DRAWINGS (ENLARGED PLANS) FOR CONTINUATION OF DIMENSIONS AND PARTITION TYPES.

L REFER TO A026 FOR DESCRIPTION OF ALL PARTITION TYPES.

M REFER TO A100 (1/8" FLOOR PLANS) SERIES DRAWINGS AND A300 SERIES DRAWINGS (ENLARGED PLANS) FOR PARTITION TYPE LOCATIONS.

N REFER TO LS SERIES DRAWING (LIFE SAFETY PLANS) FOR LOCATIONS OF FIRE RATED WALLS AND PARTITIONS.

O REFER TO A000 SERIES DRAWINGS FOR WINDOW TYPES AND DOOR TYPES, SCHEDULES AND DETAILS.

P REFER TO A000 SERIES DRAWINGS FOR INTERIOR FINISH SCHEDULES.

Q REFER TO A300 SERIES DRAWINGS (ENLARGED PLANS) FOR ADDITIONAL PLAN NOTES.

KEY PLAN

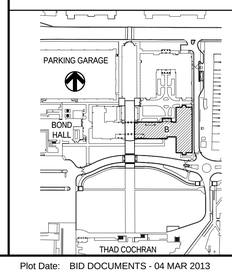

REGISTERED ARCHITECT
Thomas Hardy Saunders
3482
Tupelo, MS
STATE OF MISSISSIPPI
04 March 2013

MICHAEL EVANS
4283
04 MAR 2013
STATE OF MISSISSIPPI

THE McCARTY COMPANY
DESIGN GROUP, P.A.
TELEPHONE: (662) 844-4400
FAX: (662) 844-0500
OFFICE ADDRESS: 533 WEST MAIN STREET TUPELO, MS 38804
MAILING ADDRESS: P.O. BOX 440 TUPELO, MS 38802

DESIGN ARCHITECT
Hanbury Evans Wright Vlattas + Company
120 Atlantic Street
Norfolk, VA 23510
757.321.9600
www.hewv.com

PROJECT TITLE
USM - CENTURY PARK SOUTH
IHL# 208-297
HATTIESBURG, MISSISSIPPI

THE UNIVERSITY OF SOUTHERN MISSISSIPPI

PROJECT NO: 2012020
DRAWN BY: JCF, SOM
CHECKED BY: JPH, JTG
DATE ISSUED: 04 MAR 2013

REVISIONS & ADDENDUMS

SHEET TITLE
BUILDING B - THIRD - FOURTH FLOOR PLAN

SHEET NUMBER
A103B

3/11/2013 5:23:42 AM

Plot Date: BID DOCUMENTS - 04 MAR 2013

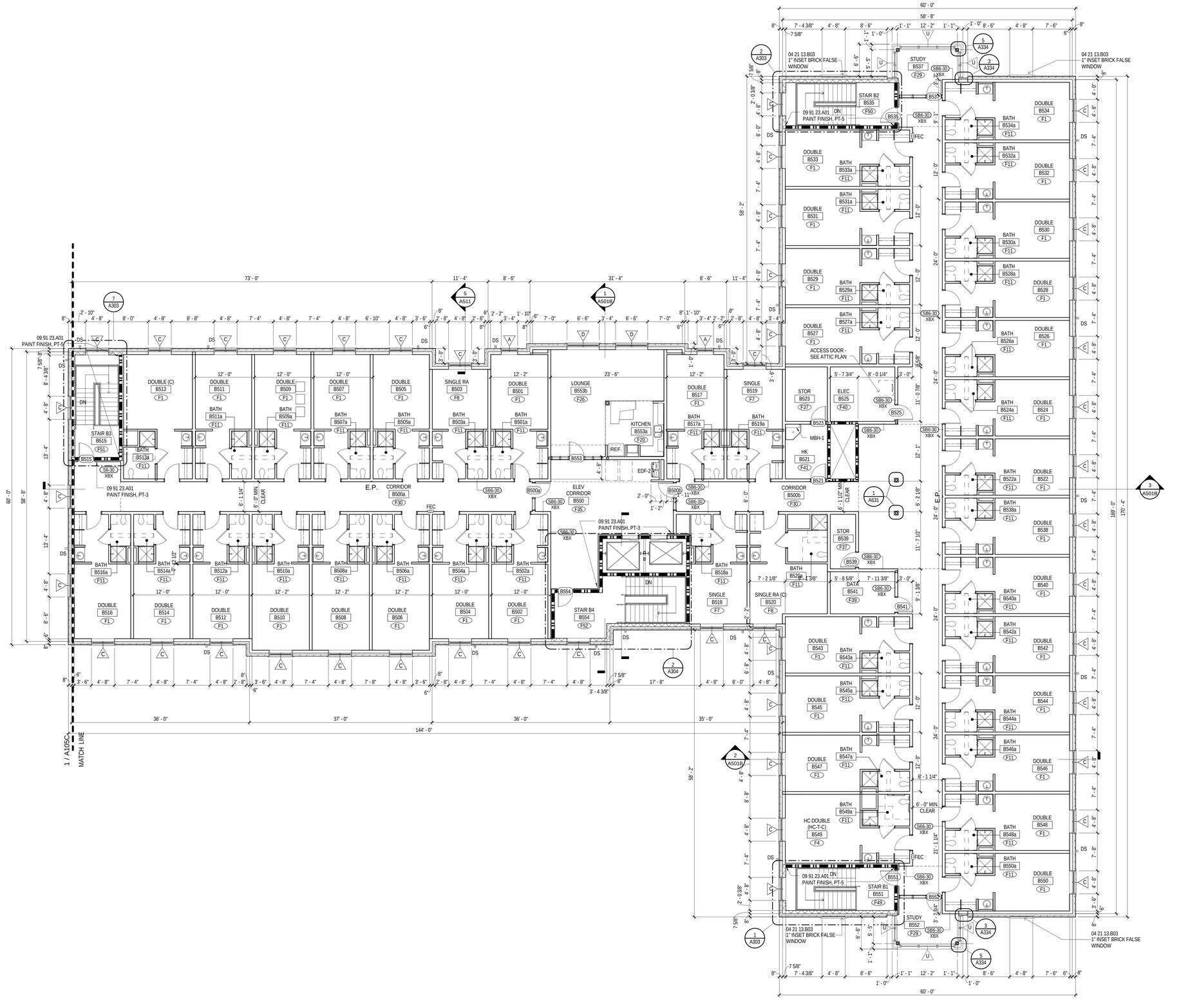

1 1/8" = 1'-0"

NORTH

BUILDING B - FIFTH FLOOR PLAN

18,004 GSF - FLOOR 137,181 GSF - BUILDING TOTAL 78 BEDS THIS FLOOR

MATERIAL KEYING

04 21 13.B03 1" INSET BRICK FALSE WINDOW

LEGEND

FEC	10 44 13.B01 SEMI-RECESSED FIRE EXT. CABINET
FEB	10 44 13.C01 FIRE EXT. BRACKET
DS	PREMANUFACTURED ALUMINUM DOWNSPOUT
EDF-1	ELECTRIC DRINKING FOUNTAIN. SEE PLUMBING.
EDF-2	ELECTRIC DRINKING FOUNTAIN. SEE PLUMBING.
EDF-3	ELECTRIC DRINKING FOUNTAIN WITH BOTTLE FILLER. SEE PLUMBING.
MBH-1	10 28 00.L01 MOP AND BROOM HOLDER (MBH-1)
CJ	CONTROL JOINT
EJ-#	07 95 00.### EXPANSION JOINT COVER (EJ-#)
E.P.	EMERGENCY PHONE SEE ELECTRICAL

GENERAL NOTES

A ALL INTERIOR AND EXTERIOR DIMENSIONS ARE TO FACE OF STUD, CMU, CONCRETE OR COLUMN CENTERLINE UNLESS NOTED OTHERWISE.

B UNLESS NOTED OTHERWISE, ALL OVERALL EXTERIOR DIMENSIONS INCLUDING BRICK MASONRY OPENINGS ARE TO FACE OF BRICK VENEER.

C WHERE INTERIOR FACE OF FINISH OR CLEAR DIMENSIONS ARE INDICATED FOR COORDINATION PURPOSES OR TO DESIGNATE REQUIRED CODE CLEARANCES, THE DIMENSION IS TYPICALLY DESIGNATED AS "FOF" (FACE OF FINISH) OR "CLEAR".

D PROVIDE COMPLETE FIRE STOP AT ALL STRUCTURAL, MECHANICAL AND ELECTRICAL PENETRATIONS THROUGH ALL FIRE RATED ASSEMBLIES. REFER TO SPECIFICATIONS FOR REQUIREMENTS.

E CONTRACTOR TO PROVIDE 12 GAGE METAL BLOCKING IN STUD WALLS FOR ANCHORAGE OF WALL MOUNTED ITEMS INCLUDING BUT NOT LIMITED TO TOILET ACCESSORIES, WALL CABINETS, WALL MOUNTED TV'S, SHELVING, TOILET PARTITIONS, OWNER FURNISHED EQUIPMENT INDICATED AND SIMILAR ITEMS. FOR TYPE B DWELLING UNITS, PROVIDE METAL BLOCKING IN WALLS FOR FUTURE INSTALLATIONS AS INDICATED. FOR WALL MOUNTED TV'S IN LOUNGES, PROVIDE METAL BLOCKING 24" ABOVE AND BELOW ELECTRICAL JUNCTION BOXES.

F AT ALL HOUSEKEEPING MOP SINKS, PROVIDE WALL PROTECTION WITH 22 GA. STAINLESS STEEL SKIRT 48" AFF AND 30" WIDE AT EACH WALL FROM CORNER, WITH BENT SEAM AT CORNER.

G IN GYPSUM WALLBOARD APPLICATIONS, INSTALL CONTROL JOINTS IN ACCORDANCE WITH ASTM C840 AT LOCATIONS AS INDICATED ON DRAWINGS BY "CJ".

H SHOWER UNITS SHALL BE GROUTED SOLID UNDERNEATH - FILL VOID BETWEEN FLOOR SLAB AND FLOOR OF SHOWER.

I PROVIDE 3/4" EXT. FIRE-RETARDANT-TREATED PLYWOOD BACKER PANELS FROM FLOOR TO 8'-0" AFF. LAYERED OVER GYPSUM BOARD, TO ALL WALLS AT ALL DATA AND ACCESS CONTROL ROOMS. PLYWOOD TO BE PAINTED WALL COLOR.

J PROVIDE MOP AND BROOM HOLDER WITH SHELF PER SPECIFICATION 102800 AND AS INDICATED BY "MBH-1" ABOVE ALL FLOOR SINKS AT HOUSEKEEPING CLOSETS, MOUNTED 60" AFF TO BOTTOM.

K REFER TO A300 SERIES DRAWINGS (ENLARGED PLANS) FOR CONTINUATION OF DIMENSIONS AND PARTITION TYPES.

L REFER TO A026 FOR DESCRIPTION OF ALL PARTITION TYPES.

M REFER TO A100 (1/8" FLOOR PLANS) SERIES DRAWINGS AND A300 SERIES DRAWINGS (ENLARGED PLANS) FOR PARTITION TYPE LOCATIONS.

N REFER TO LS SERIES DRAWING (LIFE SAFETY PLANS) FOR LOCATIONS OF FIRE RATED WALLS AND PARTITIONS.

O REFER TO A000 SERIES DRAWINGS FOR WINDOW TYPES AND DOOR TYPES, SCHEDULES AND DETAILS.

P REFER TO A000 SERIES DRAWINGS FOR INTERIOR FINISH SCHEDULES.

Q REFER TO A300 SERIES DRAWINGS (ENLARGED PLANS) FOR ADDITIONAL PLAN NOTES.

KEY PLAN

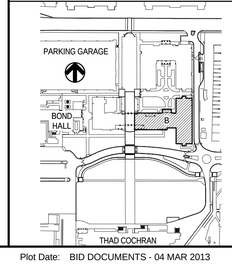

REGISTERED ARCHITECT
Thomas Hollingsworth Jones III
Tupelo, MS
STATE OF MISSISSIPPI
04 MARCH 2013

REGISTERED ARCHITECT
MICHAEL EVANS
4283
04 MAR 2013
STATE OF MISSISSIPPI

THE McCARTY COMPANY
DESIGN GROUP, P.A.
OFFICE ADDRESS: 533 WEST MAIN STREET TUPELO, MS 38804
MAILING ADDRESS: P.O. BOX 440 TUPELO, MS 38802
TELEPHONE: (662) 844-4400
FAX: (662) 844-0500

DESIGN ARCHITECT
Hanbury Evans Wright Vlattas + Company
120 Atlantic Street
Norfolk, VA 23510
757.321.9600
www.hewv.com

PROJECT TITLE
USM - CENTURY PARK SOUTH
IHL# 208-297
THE UNIVERSITY OF SOUTHERN MISSISSIPPI
HATTIESBURG, MISSISSIPPI

PROJECT NO: 2012020
DRAWN BY: JCF, SOM
CHECKED BY: JPH, JTG
DATE ISSUED: 04 MAR 2013

REVISIONS & ADDENDUMS

SHEET TITLE
BUILDING B - FIFTH FLOOR PLAN

SHEET NUMBER
A105B

3/11/2013 5:24:42 AM

Plot Date: BID DOCUMENTS - 04 MAR 2013

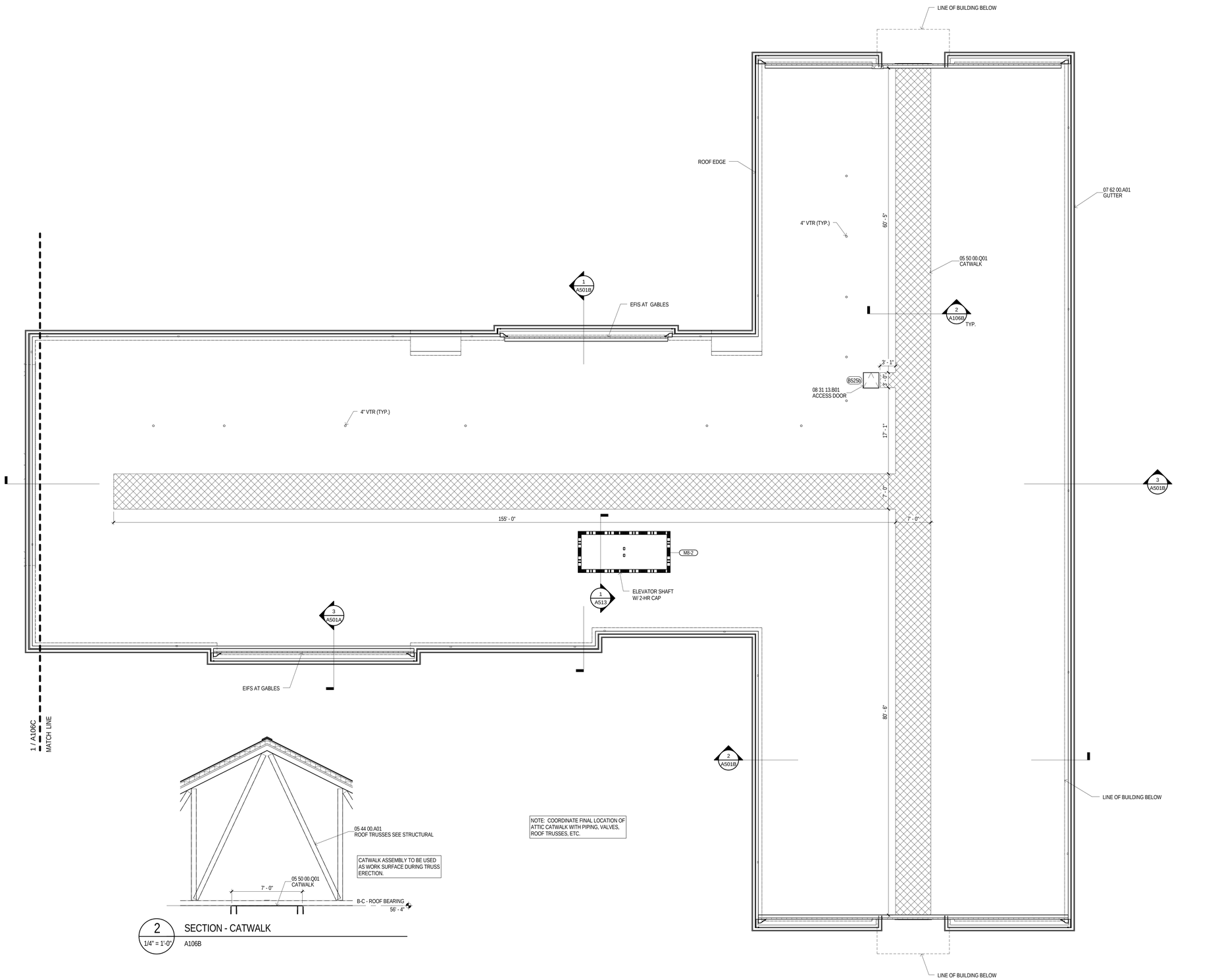

2 SECTION - CATWALK
1/4" = 1'-0"
A106B

NOTE: COORDINATE FINAL LOCATION OF ATTIC CATWALK WITH PIPING, VALVES, ROOF TRUSSES, ETC.

NORTH

1 BUILDING B - ATTIC FLOOR PLAN
1/8" = 1'-0"

0' 8' 16' 24'

MATERIAL KEYING

05 44 00.A01	ROOF TRUSSES SEE STRUCTURAL
05 50 00.Q01	CATWALK
07 62 00.A01	GUTTER
08 31 13.B01	ACCESS DOOR

GENERAL NOTES

A ALL INTERIOR AND EXTERIOR DIMENSIONS ARE TO FACE OF STUD, CMU, CONCRETE OR COLUMN CENTERLINE UNLESS NOTED OTHERWISE.

B UNLESS NOTED OTHERWISE, ALL OVERALL EXTERIOR DIMENSIONS INCLUDING BRICK MASONRY OPENINGS ARE TO FACE OF BRICK VENEER.

C WHERE INTERIOR FACE OF FINISH OR CLEAR DIMENSIONS ARE INDICATED FOR COORDINATION PURPOSES OR TO DESIGNATE REQUIRED CODE CLEARANCES, THE DIMENSION IS TYPICALLY DESIGNATED AS "FOF" (FACE OF FINISH) OR "CLEAR".

D PROVIDE COMPLETE FIRE STOP AT ALL STRUCTURAL, MECHANICAL AND ELECTRICAL PENETRATIONS THROUGH ALL FIRE RATED ASSEMBLIES. REFER TO SPECIFICATIONS FOR REQUIREMENTS.

E CONTRACTOR TO PROVIDE 12 GAGE METAL BLOCKING IN STUD WALLS FOR ANCHORAGE OF WALL MOUNTED ITEMS INCLUDING BUT NOT LIMITED TO TOILET ACCESSORIES, WALL CABINETS, WALL MOUNTED TV'S, SHELVING, TOILET PARTITIONS, OWNER FURNISHED EQUIPMENT INDICATED AND SIMILAR ITEMS. FOR TYPE B DWELLING UNITS, PROVIDE METAL BLOCKING IN WALLS FOR FUTURE INSTALLATIONS AS INDICATED. FOR WALL MOUNTED TV'S IN LOUNGES, PROVIDE METAL BLOCKING 24" ABOVE AND BELOW ELECTRICAL JUNCTION BOXES.

F AT ALL HOUSEKEEPING MOP SINKS, PROVIDE WALL PROTECTION WITH 22 GA. STAINLESS STEEL SKIRT 48" AFF AND 30" WIDE AT EACH WALL FROM CORNER, WITH BENT SEAM AT CORNER.

G IN GYPSUM WALLBOARD APPLICATIONS, INSTALL CONTROL JOINTS IN ACCORDANCE WITH ASTM C840 AT LOCATIONS AS INDICATED ON DRAWINGS BY "CJ".

H SHOWER UNITS SHALL BE GROUTED SOLID UNDERNEATH - FILL VOID BETWEEN FLOOR SLAB AND FLOOR OF SHOWER.

I PROVIDE 3/4" EXT. FIRE-RETARDANT-TREATED PLYWOOD BACKER PANELS FROM FLOOR TO 8'-0" AFF, LAYERED OVER GYPSUM BOARD, TO ALL WALLS AT ALL DATA AND ACCESS CONTROL ROOMS. PLYWOOD TO BE PAINTED WALL COLOR.

J PROVIDE MOP AND BROOM HOLDER WITH SHELF PER SPECIFICATION 102800 AND AS INDICATED BY "MBH-1" ABOVE ALL FLOOR SINKS AT HOUSEKEEPING CLOSETS, MOUNTED 60" AFF TO BOTTOM.

K REFER TO A300 SERIES DRAWINGS (ENLARGED PLANS) FOR CONTINUATION OF DIMENSIONS AND PARTITION TYPES.

L REFER TO A026 FOR DESCRIPTION OF ALL PARTITION TYPES.

M REFER TO A100 (1/8" FLOOR PLANS) SERIES DRAWINGS AND A300 SERIES DRAWINGS (ENLARGED PLANS) FOR PARTITION TYPE LOCATIONS.

N REFER TO LS SERIES DRAWING (LIFE SAFETY PLANS) FOR LOCATIONS OF FIRE RATED WALLS AND PARTITIONS.

O REFER TO A000 SERIES DRAWINGS FOR WINDOW TYPES AND DOOR TYPES, SCHEDULES AND DETAILS.

P REFER TO A000 SERIES DRAWINGS FOR INTERIOR FINISH SCHEDULES.

Q REFER TO A300 SERIES DRAWINGS (ENLARGED PLANS) FOR ADDITIONAL PLAN NOTES.

KEY PLAN

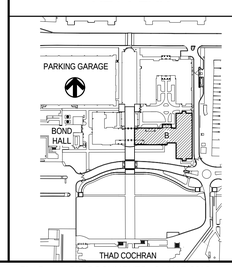

REGISTERED ARCHITECT
Thomas Alexander Saunders
3483
Tupelo, MS
STATE OF MISSISSIPPI
04 MARCH 2013

REGISTERED ARCHITECT
MICHAEL EVANS
4283
04 MAR 2013
STATE OF MISSISSIPPI

THE McCARTY COMPANY
DESIGN GROUP, P.A.
MAILING ADDRESS: P.O. BOX 440 TUPELO, MS 38802
OFFICE ADDRESS: 533 WEST MAIN STREET TUPELO, MS 38804
TELEPHONE: (662) 844-4400
FAX: (662) 844-0500

DESIGN ARCHITECT
Hanbury Evans Wright Vlattas + Company
120 Atlantic Street
Norfolk, VA 23510
757.321.9600
www.hewv.com

PROJECT TITLE
USM - CENTURY PARK SOUTH
IHL# 208-297
HATTIESBURG, MISSISSIPPI

THE UNIVERSITY OF SOUTHERN MISSISSIPPI

PROJECT NO: 2012020
DRAWN BY: BKS
CHECKED BY: JPH
DATE ISSUED: 04 MAR 2013

REVISIONS & ADDENDUMS

SHEET TITLE
BUILDING B - ATTIC FLOOR PLAN

SHEET NUMBER
A106B

3/11/2013 5:26:18 AM

Plot Date: BID DOCUMENTS - 04 MAR 2013

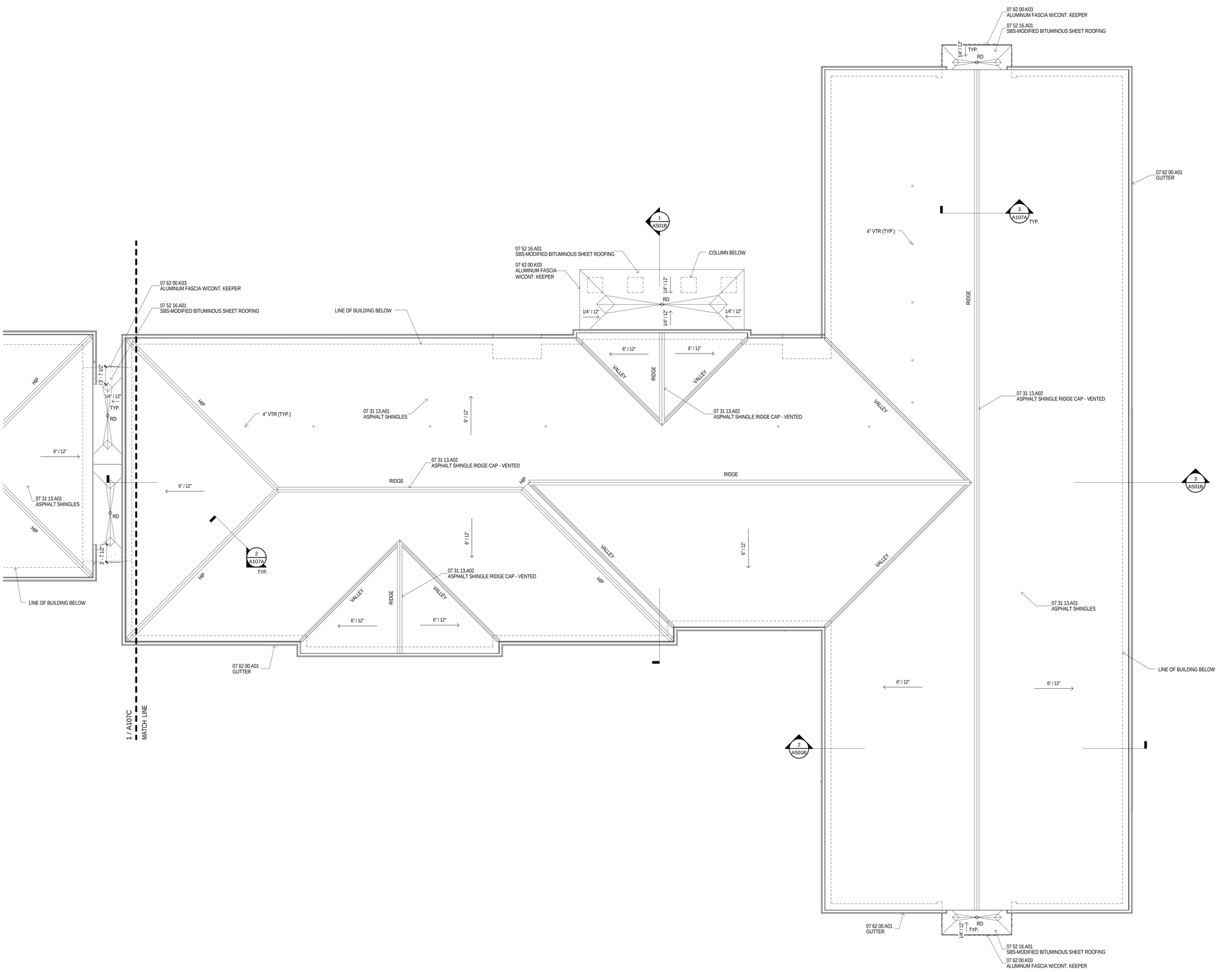

1 BUILDING B - ROOF PLAN
1/8" = 1'-0"
NORTH

0' 8' 16' 24'

MATERIAL KEYING

07 31 13.A01	ASPHALT SHINGLES
07 31 13.A02	ASPHALT SHINGLE RIDGE CAP - VENTED
07 52 16.A01	SBS-MODIFIED BITUMINOUS SHEET ROOFING
07 62 00.A01	GUTTER
07 62 00.K03	ALUMINUM FASCIA W/CONT. KEEPER

LEGEND

RD	ROOF DRAIN - SEE PLUMBING

GENERAL NOTES

A ALL INTERIOR AND EXTERIOR DIMENSIONS ARE TO FACE OF STUD, CMU, CONCRETE OR COLUMN CENTERLINE UNLESS NOTED OTHERWISE.

B UNLESS NOTED OTHERWISE, ALL OVERALL EXTERIOR DIMENSIONS INCLUDING BRICK MASONRY OPENINGS ARE TO FACE OF BRICK VENEER.

C WHERE INTERIOR FACE OF FINISH OR CLEAR DIMENSIONS ARE INDICATED FOR COORDINATION PURPOSES OR TO DESIGNATE REQUIRED CODE CLEARANCES, THE DIMENSION IS TYPICALLY DESIGNATED AS "FOF" (FACE OF FINISH) OR "CLEAR".

D PROVIDE COMPLETE FIRE STOP AT ALL STRUCTURAL, MECHANICAL AND ELECTRICAL PENETRATIONS THROUGH ALL FIRE RATED ASSEMBLIES. REFER TO SPECIFICATIONS FOR REQUIREMENTS.

E CONTRACTOR TO PROVIDE 12 GAGE METAL BLOCKING IN STUD WALLS FOR ANCHORAGE OF WALL MOUNTED ITEMS INCLUDING BUT NOT LIMITED TO TOILET ACCESSORIES, WALL CABINETS, WALL MOUNTED TV'S, SHELVING, TOILET PARTITIONS, OWNER FURNISHED EQUIPMENT INDICATED AND SIMILAR ITEMS. FOR TYPE B DWELLING UNITS, PROVIDE METAL BLOCKING IN WALLS FOR FUTURE INSTALLATIONS AS INDICATED. FOR WALL MOUNTED TV'S IN LOUNGES, PROVIDE METAL BLOCKING 24" ABOVE AND BELOW ELECTRICAL JUNCTION BOXES.

F AT ALL HOUSEKEEPING MOP SINKS, PROVIDE WALL PROTECTION WITH 22 GA. STAINLESS STEEL SKIRT 48" AFF AND 30" WIDE AT EACH WALL FROM CORNER, WITH BENT SEAM AT CORNER.

G IN GYPSUM WALLBOARD APPLICATIONS, INSTALL CONTROL JOINTS IN ACCORDANCE WITH ASTM C840 AT LOCATIONS AS INDICATED ON DRAWINGS BY "CJ".

H SHOWER UNITS SHALL BE GROUTED SOLID UNDERNEATH - FILL VOID BETWEEN FLOOR SLAB AND FLOOR OF SHOWER.

I PROVIDE 3/4" EXT. FIRE-RETARDANT-TREATED PLYWOOD BACKER PANELS FROM FLOOR TO 8'-0" AFF, LAYERED OVER GYPSUM BOARD, TO ALL WALLS AT ALL DATA AND ACCESS CONTROL ROOMS. PLYWOOD TO BE PAINTED WALL COLOR.

J PROVIDE MOP AND BROOM HOLDER WITH SHELF PER SPECIFICATION 102800 AND AS INDICATED BY "MBH-1" ABOVE ALL FLOOR SINKS AT HOUSEKEEPING CLOSETS, MOUNTED 60" AFF TO BOTTOM.

K REFER TO A300 SERIES DRAWINGS (ENLARGED PLANS) FOR CONTINUATION OF DIMENSIONS AND PARTITION TYPES.

L REFER TO A026 FOR DESCRIPTION OF ALL PARTITION TYPES.

M REFER TO A100 (1/8" FLOOR PLANS) SERIES DRAWINGS AND A300 SERIES DRAWINGS (ENLARGED PLANS) FOR PARTITION TYPE LOCATIONS.

N REFER TO LS SERIES DRAWING (LIFE SAFETY PLANS) FOR LOCATIONS OF FIRE RATED WALLS AND PARTITIONS.

O REFER TO A000 SERIES DRAWINGS FOR WINDOW TYPES AND DOOR TYPES, SCHEDULES AND DETAILS.

P REFER TO A000 SERIES DRAWINGS FOR INTERIOR FINISH SCHEDULES.

Q REFER TO A300 SERIES DRAWINGS (ENLARGED PLANS) FOR ADDITIONAL PLAN NOTES.

KEY PLAN

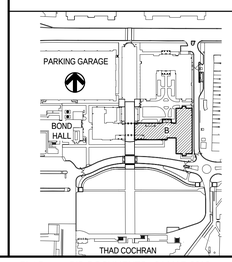

REGISTERED ARCHITECT
Thomas Bernard Saunders
3483
Tupelo, MS
STATE OF MISSISSIPPI
04 march 2013

REGISTERED ARCHITECT
MICHAEL EVANS
4283
04 MAR 2013
STATE OF MISSISSIPPI

THE McCARTY COMPANY
DESIGN GROUP, P.A.
TELEPHONE: (662) 844-4400
FAX: (662) 844-0500
OFFICE ADDRESS: 533 WEST MAIN STREET TUPELO, MS 38804
MAILING ADDRESS: P.O. BOX 440 TUPELO, MS 38802

DESIGN ARCHITECT
Hanbury Evans Wright Vlattas + Company
120 Atlantic Street
Norfolk, VA 23510
757.321.9600
www.hewv.com

PROJECT TITLE
USM - CENTURY PARK SOUTH
IHL# 208-297
HATTIESBURG, MISSISSIPPI

THE UNIVERSITY OF SOUTHERN MISSISSIPPI

PROJECT NO: 2012020
DRAWN BY: BKS
CHECKED BY: JPH
DATE ISSUED: 04 MAR 2013

REVISIONS & ADDENDUMS

SHEET TITLE
BUILDING B - ROOF PLAN

SHEET NUMBER
A107B
98 of 458

3/11/2013 5:27:36 AM

Plot Date: BID DOCUMENTS - 04 MAR 2013

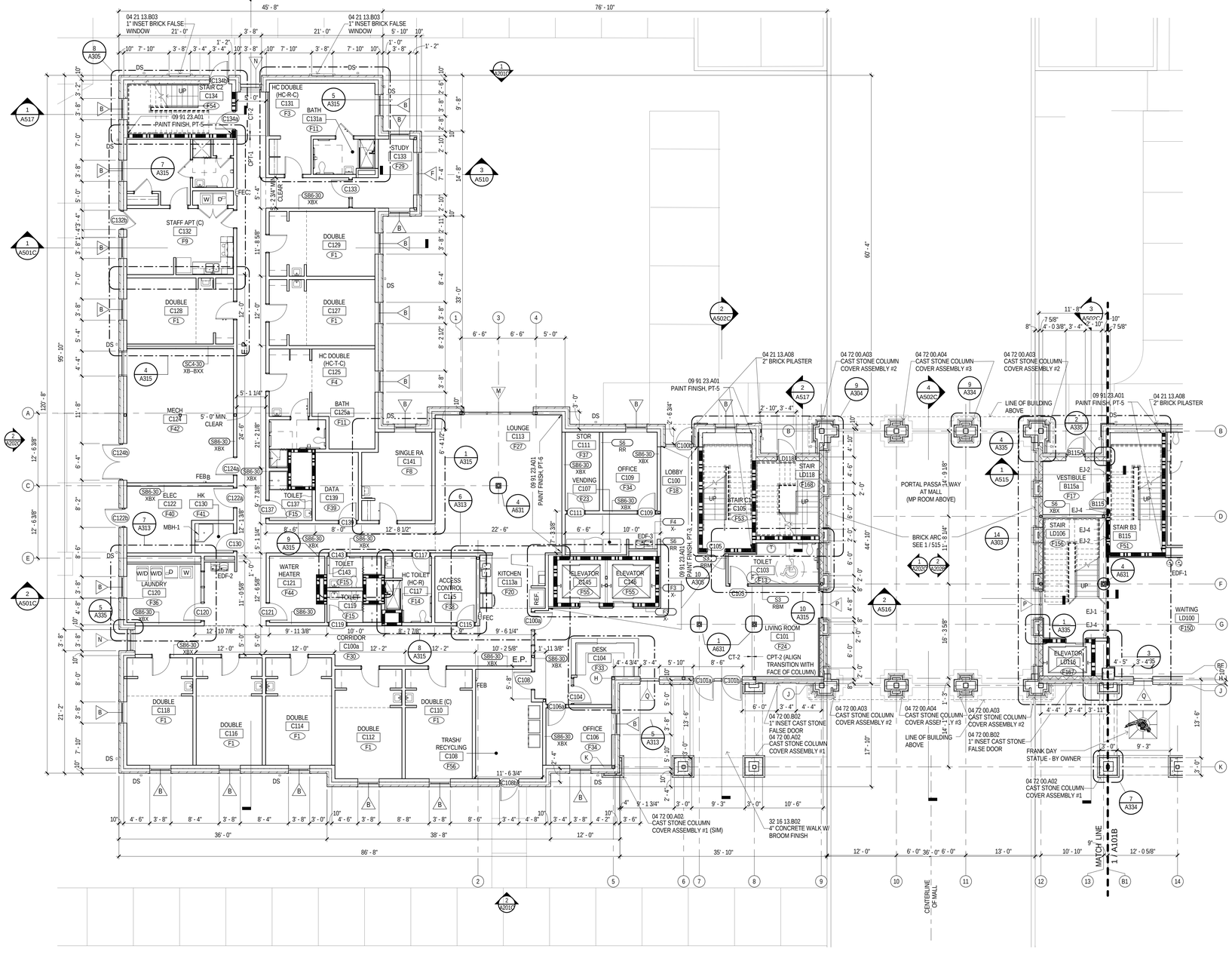

1 BUILDING C - FIRST FLOOR PLAN

1/8" = 1'-0"

NORTH

9,354 GSF - FLOOR 137,181 GSF - BUILDING TOTAL 21 BEDS THIS FLOOR

0' 8' 16' 24'

MATERIAL KEYING

04 21 13.A08	2" BRICK PILASTER
04 21 13.B03	1" INSET BRICK FALSE WINDOW
04 72 00.A02	CAST STONE COLUMN COVER ASSEMBLY #1
04 72 00.A03	CAST STONE COLUMN COVER ASSEMBLY #2
04 72 00.A04	CAST STONE COLUMN COVER ASSEMBLY #3
04 72 00.B02	1" INSET CAST STONE FALSE DOOR
32 16 13.B02	4" CONCRETE WALK W/ BROOM FINISH

LEGEND

FEC	10 44 13.B01 SEMI-RECESSED FIRE EXT. CABINET
FEB	10 44 13.C01 FIRE EXT. BRACKET
DS	PREMANUFACTURED ALUMINUM DOWNSPOUT
EDF-1	ELECTRIC DRINKING FOUNTAIN. SEE PLUMBING.
EDF-2	ELECTRIC DRINKING FOUNTAIN. SEE PLUMBING.
EDF-3	ELECTRIC DRINKING FOUNTAIN WITH BOTTLE FILLER. SEE PLUMBING.
MBH-1	10 28 00.L01 MOP AND BROOM HOLDER (MBH-1)
CJ	CONTROL JOINT
EJ-#	07 95 00.### EXPANSION JOINT COVER (EJ-#)
E.P.	EMERGENCY PHONE SEE ELECTRICAL

GENERAL NOTES

A ALL INTERIOR AND EXTERIOR DIMENSIONS ARE TO FACE OF STUD, CMU, CONCRETE OR COLUMN CENTERLINE UNLESS NOTED OTHERWISE.

B UNLESS NOTED OTHERWISE, ALL OVERALL EXTERIOR DIMENSIONS INCLUDING BRICK MASONRY OPENINGS ARE TO FACE OF BRICK VENEER.

C WHERE INTERIOR FACE OF FINISH OR CLEAR DIMENSIONS ARE INDICATED FOR COORDINATION PURPOSES OR TO DESIGNATE REQUIRED CODE CLEARANCES, THE DIMENSION IS TYPICALLY DESIGNATED AS "FOF" (FACE OF FINISH) OR "CLEAR".

D PROVIDE COMPLETE FIRE STOP AT ALL STRUCTURAL, MECHANICAL AND ELECTRICAL PENETRATIONS THROUGH ALL FIRE RATED ASSEMBLIES. REFER TO SPECIFICATIONS FOR REQUIREMENTS.

E CONTRACTOR TO PROVIDE 12 GAGE METAL BLOCKING IN STUD WALLS FOR ANCHORAGE OF WALL MOUNTED ITEMS INCLUDING BUT NOT LIMITED TO TOILET ACCESSORIES, WALL CABINETS, WALL MOUNTED TV'S, SHELVING, TOILET PARTITIONS, OWNER FURNISHED EQUIPMENT INDICATED AND SIMILAR ITEMS. FOR TYPE B DWELLING UNITS, PROVIDE METAL BLOCKING IN WALLS FOR FUTURE INSTALLATIONS AS INDICATED. FOR WALL MOUNTED TV'S IN LOUNGES, PROVIDE METAL BLOCKING 24" ABOVE AND BELOW ELECTRICAL JUNCTION BOXES.

F AT ALL HOUSEKEEPING MOP SINKS, PROVIDE WALL PROTECTION WITH 22 GA. STAINLESS STEEL SKIRT 48" AFF AND 30" WIDE AT EACH WALL FROM CORNER, WITH BENT SEAM AT CORNER.

G IN GYPSUM WALLBOARD APPLICATIONS, INSTALL CONTROL JOINTS IN ACCORDANCE WITH ASTM C840 AT LOCATIONS AS INDICATED ON DRAWINGS BY "CJ".

H SHOWER UNITS SHALL BE GROUTED SOLID UNDERNEATH - FILL VOID BETWEEN FLOOR SLAB AND FLOOR OF SHOWER.

I PROVIDE 3/4" EXT. FIRE-RETARDANT-TREATED PLYWOOD BACKER PANELS FROM FLOOR TO 8'-0" AFF, LAYERED OVER GYPSUM BOARD, TO ALL WALLS AT ALL DATA AND ACCESS CONTROL ROOMS. PLYWOOD TO BE PAINTED WALL COLOR.

J PROVIDE MOP AND BROOM HOLDER WITH SHELF PER SPECIFICATION 102800 AND AS INDICATED BY "MBH-1" ABOVE ALL FLOOR SINKS AT HOUSEKEEPING CLOSETS, MOUNTED 60" AFF TO BOTTOM.

K REFER TO A300 SERIES DRAWINGS (ENLARGED PLANS) FOR CONTINUATION OF DIMENSIONS AND PARTITION TYPES.

L REFER TO A026 FOR DESCRIPTION OF ALL PARTITION TYPES.

M REFER TO A100 (1/8" FLOOR PLANS) SERIES DRAWINGS AND A300 SERIES DRAWINGS (ENLARGED PLANS) FOR PARTITION TYPE LOCATIONS.

N REFER TO LS SERIES DRAWING (LIFE SAFETY PLANS) FOR LOCATIONS OF FIRE RATED WALLS AND PARTITIONS.

O REFER TO A000 SERIES DRAWINGS FOR WINDOW TYPES AND DOOR TYPES, SCHEDULES AND DETAILS.

P REFER TO A000 SERIES DRAWINGS FOR INTERIOR FINISH SCHEDULES.

Q REFER TO A300 SERIES DRAWINGS (ENLARGED PLANS) FOR ADDITIONAL PLAN NOTES.

KEY PLAN

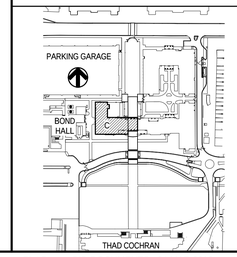

REGISTERED ARCHITECT
Thomas Jefferson Haunton
3487
Tupelo, MS
STATE OF MISSISSIPPI
04 MARCH 2013

MICHAEL EVANS
4283
04 MAR 2013
STATE OF MISSISSIPPI

THE McCARTY COMPANY
DESIGN GROUP, P.A.
TELEPHONE: (662) 844-4400
FAX: (662) 844-0500
OFFICE ADDRESS: 533 WEST MAIN STREET TUPELO, MS 38804
MAILING ADDRESS: P.O. BOX 440 TUPELO, MS 38802

DESIGN ARCHITECT
Hanbury Evans Wright Vlattas + Company
120 Atlantic Street
Norfolk, VA 23510
757.321.9600
www.hewv.com

PROJECT TITLE
USM - CENTURY PARK SOUTH
IHL# 208-297
HATTIESBURG, MISSISSIPPI

THE UNIVERSITY OF SOUTHERN MISSISSIPPI

PROJECT NO: 201020
DRAWN BY: JCF, SOM
CHECKED BY: JPH, JTG
DATE ISSUED: 04 MAR 2013

REVISIONS & ADDENDUMS

SHEET TITLE
BUILDING C - FIRST FLOOR PLAN

SHEET NUMBER
A101C

3/11/2013 5:21:33 AM

Plot Date: BID DOCUMENTS - 04 MAR 2013

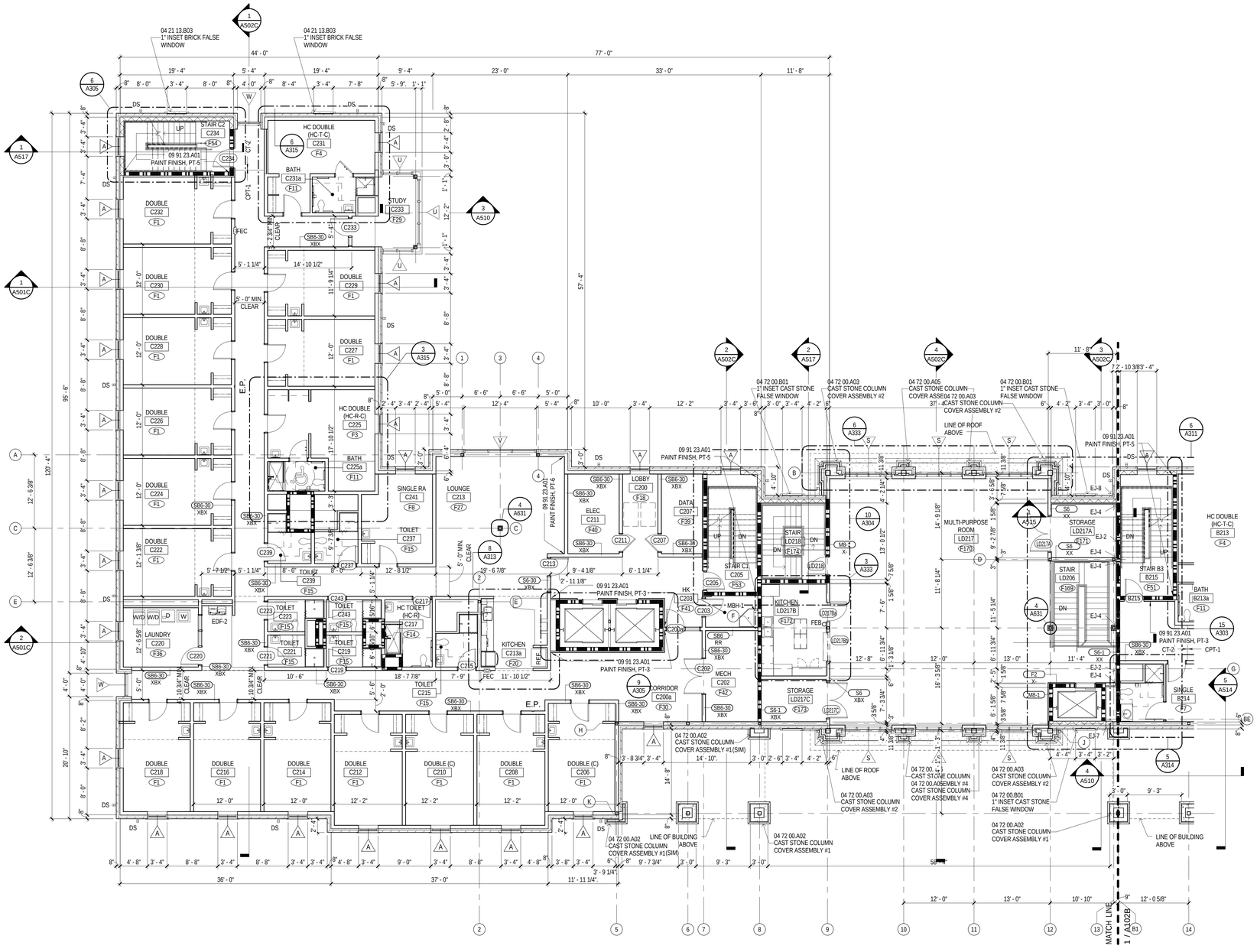

1 BUILDING C - SECOND FLOOR PLAN

1/8" = 1'-0"

NORTH

10,976 GSF - FLOOR 137,181 GSF - BUILDING TOTAL 35 BEDS THIS FLOOR

0' 8' 16' 24'

MATERIAL KEYING

04 21 13.B03	1" INSET BRICK FALSE WINDOW
04 72 00.A02	CAST STONE COLUMN COVER ASSEMBLY #1
04 72 00.A03	CAST STONE COLUMN COVER ASSEMBLY #2
04 72 00.A05	CAST STONE COLUMN COVER ASSEMBLY #4
04 72 00.B01	1" INSET CAST STONE FALSE WINDOW

LEGEND

FEC	10 44 13.B01 SEMI-RECESSED FIRE EXT. CABINET
FEB	10 44 13.C01 FIRE EXT. BRACKET
DS	PREMANUFACTURED ALUMINUM DOWNSPOUT
EDF-1	ELECTRIC DRINKING FOUNTAIN. SEE PLUMBING.
EDF-2	ELECTRIC DRINKING FOUNTAIN. SEE PLUMBING.
EDF-3	ELECTRIC DRINKING FOUNTAIN WITH BOTTLE FILLER. SEE PLUMBING.
MBH-1	10 28 00.L01 MOP AND BROOM HOLDER (MBH-1)
CJ	CONTROL JOINT
EJ-#	07 95 00.### EXPANSION JOINT COVER (EJ-#)
E.P.	EMERGENCY PHONE SEE ELECTRICAL

GENERAL NOTES

A ALL INTERIOR AND EXTERIOR DIMENSIONS ARE TO FACE OF STUD, CMU, CONCRETE OR COLUMN CENTERLINE UNLESS NOTED OTHERWISE.

B UNLESS NOTED OTHERWISE, ALL OVERALL EXTERIOR DIMENSIONS INCLUDING BRICK MASONRY OPENINGS ARE TO FACE OF BRICK VENEER.

C WHERE INTERIOR FACE OF FINISH OR CLEAR DIMENSIONS ARE INDICATED FOR COORDINATION PURPOSES OR TO DESIGNATE REQUIRED CODE CLEARANCES, THE DIMENSION IS TYPICALLY DESIGNATED AS "FOF" (FACE OF FINISH) OR "CLEAR".

D PROVIDE COMPLETE FIRE STOP AT ALL STRUCTURAL, MECHANICAL AND ELECTRICAL PENETRATIONS THROUGH ALL FIRE RATED ASSEMBLIES. REFER TO SPECIFICATIONS FOR REQUIREMENTS.

E CONTRACTOR TO PROVIDE 12 GAGE METAL BLOCKING IN STUD WALLS FOR ANCHORAGE OF WALL MOUNTED ITEMS INCLUDING BUT NOT LIMITED TO TOILET ACCESSORIES, WALL CABINETS, WALL MOUNTED TV'S, SHELVING, TOILET PARTITIONS, OWNER FURNISHED EQUIPMENT INDICATED AND SIMILAR ITEMS. FOR TYPE B DWELLING UNITS, PROVIDE METAL BLOCKING IN WALLS FOR FUTURE INSTALLATIONS AS INDICATED. FOR WALL MOUNTED TV'S IN LOUNGES, PROVIDE METAL BLOCKING 24" ABOVE AND BELOW ELECTRICAL JUNCTION BOXES.

F AT ALL HOUSEKEEPING MOP SINKS, PROVIDE WALL PROTECTION WITH 22 GA. STAINLESS STEEL SKIRT 48" AFF AND 30" WIDE AT EACH WALL FROM CORNER, WITH BENT SEAM AT CORNER.

G IN GYPSUM WALLBOARD APPLICATIONS, INSTALL CONTROL JOINTS IN ACCORDANCE WITH ASTM C840 AT LOCATIONS AS INDICATED ON DRAWINGS BY "CJ".

H SHOWER UNITS SHALL BE GROUTED SOLID UNDERNEATH - FILL VOID BETWEEN FLOOR SLAB AND FLOOR OF SHOWER.

I PROVIDE 3/4" EXT. FIRE-RETARDANT-TREATED PLYWOOD BACKER PANELS FROM FLOOR TO 8'-0" AFF, LAYERED OVER GYPSUM BOARD. TO ALL WALLS AT ALL DATA AND ACCESS CONTROL ROOMS. PLYWOOD TO BE PAINTED WALL COLOR.

J PROVIDE MOP AND BROOM HOLDER WITH SHELF PER SPECIFICATION 102800 AND AS INDICATED BY "MBH-1" ABOVE ALL FLOOR SINKS AT HOUSEKEEPING CLOSETS, MOUNTED 60" AFF TO BOTTOM.

K REFER TO A300 SERIES DRAWINGS (ENLARGED PLANS) FOR CONTINUATION OF DIMENSIONS AND PARTITION TYPES.

L REFER TO A026 FOR DESCRIPTION OF ALL PARTITION TYPES.

M REFER TO A100 (1/8" FLOOR PLANS) SERIES DRAWINGS AND A300 SERIES DRAWINGS (ENLARGED PLANS) FOR PARTITION TYPE LOCATIONS.

N REFER TO LS SERIES DRAWING (LIFE SAFETY PLANS) FOR LOCATIONS OF FIRE RATED WALLS AND PARTITIONS.

O REFER TO A000 SERIES DRAWINGS FOR WINDOW TYPES AND DOOR TYPES, SCHEDULES AND DETAILS.

P REFER TO A000 SERIES DRAWINGS FOR INTERIOR FINISH SCHEDULES.

Q REFER TO A300 SERIES DRAWINGS (ENLARGED PLANS) FOR ADDITIONAL PLAN NOTES.

KEY PLAN

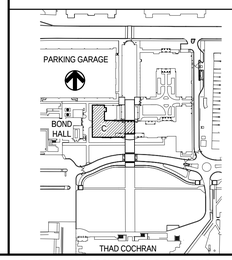

REGISTERED ARCHITECT
Thomas Hardy Saunders
3449
Tupelo, MS
STATE OF MISSISSIPPI
04 MARCH 2013

MICHAEL EVANS
4283
04 MAR 2013
STATE OF MISSISSIPPI

THE McCARTY COMPANY
DESIGN GROUP, P.A.
TELEPHONE: (662) 844-4400
FAX: (662) 844-0500
OFFICE ADDRESS: 533 WEST MAIN STREET TUPELO, MS 38804
MAILING ADDRESS: P.O. BOX 440 TUPELO, MS 38802

DESIGN ARCHITECT
Hanbury Evans Wright Vlattas + Company
120 Atlantic Street
Norfolk, VA 23510
757.321.9600
www.hewv.com

PROJECT TITLE
USM - CENTURY PARK SOUTH
IHL# 208-297
HATTIESBURG, MISSISSIPPI

THE UNIVERSITY OF SOUTHERN MISSISSIPPI

PROJECT NO:
- 2012020

DRAWN BY:
- JCF, SOM

CHECKED BY:
- JPH, JTG

DATE ISSUED:
- 04 MAR 2013

REVISIONS & ADDENDUMS

SHEET TITLE
BUILDING C - SECOND FLOOR PLAN

SHEET NUMBER
A102C

Plot Date: BID DOCUMENTS - 04 MAR 2013

3/11/2013 5:23:04 AM

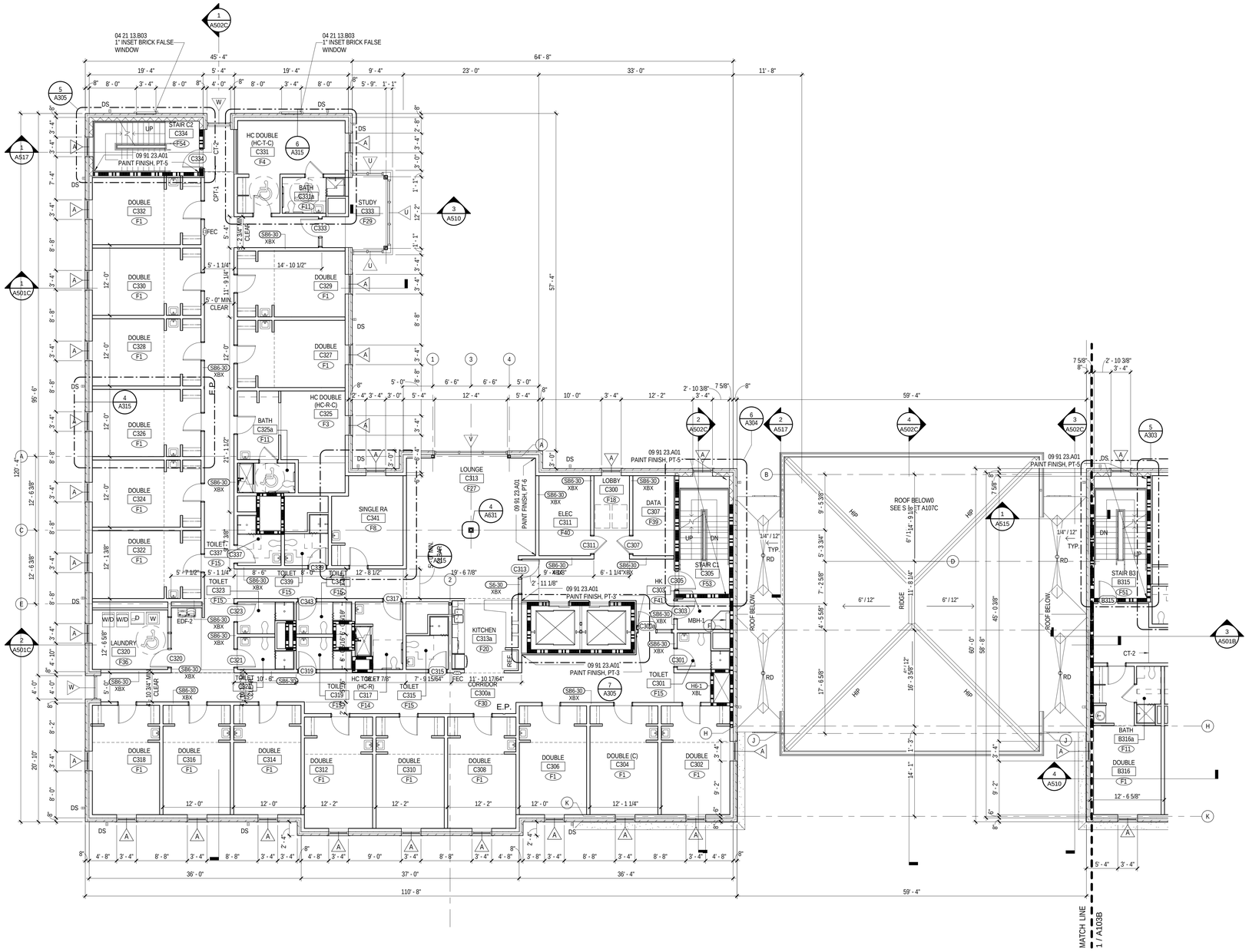

GENERAL INTERIOR PLAN NOTE:
SEE SECOND FLOOR PLAN A102b FOR ADDITIONAL
INTERIOR PLAN LAYOUT INFORMATION

NORTH

1 BUILDING C - THIRD - FOURTH FLOOR PLAN

1/8" = 1'-0"

9,037 GSF - FLOOR 137,181 GSF - BUILDING TOTAL 39 BEDS PER FLOOR

0' 8' 16' 24'

MATERIAL KEYING

04 21 13.B03 1" INSET BRICK FALSE WINDOW

LEGEND

FEC	10 44 13.B01 SEMI-RECESSED FIRE EXT. CABINET
FEB	10 44 13.C01 FIRE EXT. BRACKET
DS	PREMANUFACTURED ALUMINUM DOWNSPOUT
EDF-1	ELECTRIC DRINKING FOUNTAIN. SEE PLUMBING.
EDF-2	ELECTRIC DRINKING FOUNTAIN. SEE PLUMBING.
EDF-3	ELECTRIC DRINKING FOUNTAIN WITH BOTTLE FILLER. SEE PLUMBING.
MBH-1	10 28 00.L01 MOP AND BROOM HOLDER (MBH-1)
CJ	CONTROL JOINT
EJ-#	07 95 00.### EXPANSION JOINT COVER (EJ-#)
E.P.	EMERGENCY PHONE SEE ELECTRICAL
RD	ROOF DRAIN - SEE PLUMBING

GENERAL NOTES

A ALL INTERIOR AND EXTERIOR DIMENSIONS ARE TO FACE OF STUD, CMU, CONCRETE OR COLUMN CENTERLINE UNLESS NOTED OTHERWISE.

B UNLESS NOTED OTHERWISE, ALL OVERALL EXTERIOR DIMENSIONS INCLUDING BRICK MASONRY OPENINGS ARE TO FACE OF BRICK VENEER.

C WHERE INTERIOR FACE OF FINISH OR CLEAR DIMENSIONS ARE INDICATED FOR COORDINATION PURPOSES OR TO DESIGNATE REQUIRED CODE CLEARANCES, THE DIMENSION IS TYPICALLY DESIGNATED AS "FOF" (FACE OF FINISH) OR "CLEAR".

D PROVIDE COMPLETE FIRE STOP AT ALL STRUCTURAL, MECHANICAL AND ELECTRICAL PENETRATIONS THROUGH ALL FIRE RATED ASSEMBLIES. REFER TO SPECIFICATIONS FOR REQUIREMENTS.

E CONTRACTOR TO PROVIDE 12 GAGE METAL BLOCKING IN STUD WALLS FOR ANCHORAGE OF WALL MOUNTED ITEMS INCLUDING BUT NOT LIMITED TO TOILET ACCESSORIES, WALL CABINETS, WALL MOUNTED TV'S, SHELVING, TOILET PARTITIONS, OWNER FURNISHED EQUIPMENT INDICATED AND SIMILAR ITEMS. FOR TYPE B DWELLING UNITS, PROVIDE METAL BLOCKING IN WALLS FOR FUTURE INSTALLATIONS AS INDICATED. FOR WALL MOUNTED TV'S IN LOUNGES, PROVIDE METAL BLOCKING 24" ABOVE AND BELOW ELECTRICAL JUNCTION BOXES.

F AT ALL HOUSEKEEPING MOP SINKS, PROVIDE WALL PROTECTION WITH 22 GA. STAINLESS STEEL SKIRT 48" AFF AND 30" WIDE AT EACH WALL FROM CORNER, WITH BENT SEAM AT CORNER.

G IN GYPSUM WALLBOARD APPLICATIONS, INSTALL CONTROL JOINTS IN ACCORDANCE WITH ASTM C840 AT LOCATIONS AS INDICATED ON DRAWINGS BY "CJ".

H SHOWER UNITS SHALL BE GROUTED SOLID UNDERNEATH - FILL VOID BETWEEN FLOOR SLAB AND FLOOR OF SHOWER.

I PROVIDE 3/4" EXT. FIRE-RETARDANT-TREATED PLYWOOD BACKER PANELS FROM FLOOR TO 6'-0" AFF, LAYERED OVER GYPSUM BOARD, TO ALL WALLS AT ALL DATA AND ACCESS CONTROL ROOMS. PLYWOOD TO BE PAINTED WALL COLOR.

J PROVIDE MOP AND BROOM HOLDER WITH SHELF PER SPECIFICATION 102800 AND AS INDICATED BY "MBH-1" ABOVE ALL FLOOR SINKS AT HOUSEKEEPING CLOSETS, MOUNTED 60" AFF TO BOTTOM.

K REFER TO A300 SERIES DRAWINGS (ENLARGED PLANS) FOR CONTINUATION OF DIMENSIONS AND PARTITION TYPES.

L REFER TO A026 FOR DESCRIPTION OF ALL PARTITION TYPES.

M REFER TO A100 (1/8" FLOOR PLANS) SERIES DRAWINGS AND A300 SERIES DRAWINGS (ENLARGED PLANS) FOR PARTITION TYPE LOCATIONS.

N REFER TO LS SERIES DRAWING (LIFE SAFETY PLANS) FOR LOCATIONS OF FIRE RATED WALLS AND PARTITIONS.

O REFER TO A000 SERIES DRAWINGS FOR WINDOW TYPES AND DOOR TYPES, SCHEDULES AND DETAILS.

P REFER TO A000 SERIES DRAWINGS FOR INTERIOR FINISH SCHEDULES.

Q REFER TO A300 SERIES DRAWINGS (ENLARGED PLANS) FOR ADDITIONAL PLAN NOTES.

KEY PLAN

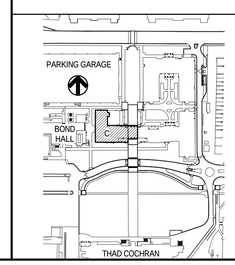

REGISTERED ARCHITECT
Thomas Michael Saunders
3483
Tupelo, MS
STATE OF MISSISSIPPI
04 march 2013

MICHAEL EVANS
4283
STATE OF MISSISSIPPI
04 MAR 2013

THE McCARTY COMPANY
DESIGN GROUP, P.A.
TELEPHONE: (662) 844-4400
FAX: (662) 844-0500
OFFICE ADDRESS: 533 WEST MAIN STREET TUPELO, MS 38804
MAILING ADDRESS: P.O. BOX 440 TUPELO, MS 38802

DESIGN ARCHITECT
Hanbury Evans Wright Vlattas + Company
120 Atlantic Street
Norfolk, VA 23510
757.321.9600
www.hewv.com

PROJECT TITLE
USM - CENTURY PARK SOUTH
IHL# 208-297
HATTIESBURG, MISSISSIPPI

THE UNIVERSITY OF SOUTHERN MISSISSIPPI

PROJECT NO: 2012020
DRAWN BY: JCF, SOM
CHECKED BY: JPH, JTG
DATE ISSUED: 04 MAR 2013

REVISIONS & ADDENDUMS

SHEET TITLE
BUILDING C - THIRD - FOURTH FLOOR PLAN

SHEET NUMBER
A103C

3/11/2013 5:24:09 AM

Plot Date: BID DOCUMENTS - 04 MAR 2013

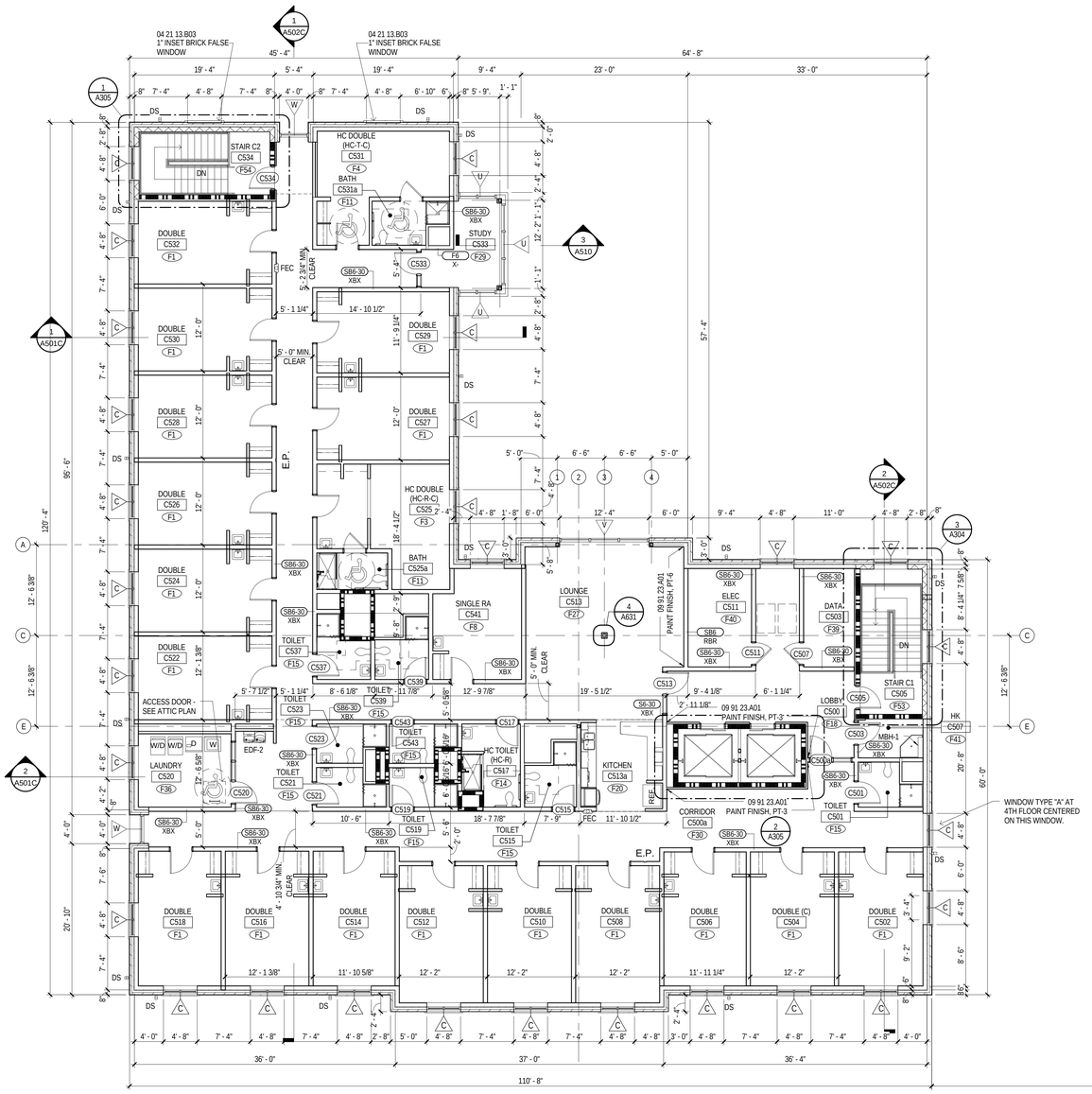

1 BUILDING C - FIFTH FLOOR PLAN

1/8" = 1'-0"

NORTH

9,037 GSF - FLOOR 137,181 GSF - BUILDING TOTAL 39 BEDS THIS FLOOR

0' 8' 16' 24'

MATERIAL KEYING

04 21 13.B03	1" INSET BRICK FALSE WINDOW

LEGEND

FEC	10 44 13.B01 SEMI-RECESSED FIRE EXT. CABINET
FEB	10 44 13.C01 FIRE EXT. BRACKET
DS	PREMANUFACTURED ALUMINUM DOWNSPOUT
EDF-1	ELECTRIC DRINKING FOUNTAIN. SEE PLUMBING.
EDF-2	ELECTRIC DRINKING FOUNTAIN. SEE PLUMBING.
EDF-3	ELECTRIC DRINKING FOUNTAIN WITH BOTTLE FILLER. SEE PLUMBING.
MBH-1	10 28 00.L01 MOP AND BROOM HOLDER (MBH-1)
CJ	CONTROL JOINT
EJ-#	07 95 00.### EXPANSION JOINT COVER (EJ-#)
E.P.	EMERGENCY PHONE SEE ELECTRICAL

GENERAL NOTES

A ALL INTERIOR AND EXTERIOR DIMENSIONS ARE TO FACE OF STUD, CMU, CONCRETE OR COLUMN CENTERLINE UNLESS NOTED OTHERWISE.

B UNLESS NOTED OTHERWISE, ALL OVERALL EXTERIOR DIMENSIONS INCLUDING BRICK MASONRY OPENINGS ARE TO FACE OF BRICK VENEER.

C WHERE INTERIOR FACE OF FINISH OR CLEAR DIMENSIONS ARE INDICATED FOR COORDINATION PURPOSES OR TO DESIGNATE REQUIRED CODE CLEARANCES, THE DIMENSION IS TYPICALLY DESIGNATED AS "FOF" (FACE OF FINISH) OR "CLEAR".

D PROVIDE COMPLETE FIRE STOP AT ALL STRUCTURAL, MECHANICAL AND ELECTRICAL PENETRATIONS THROUGH ALL FIRE RATED ASSEMBLIES. REFER TO SPECIFICATIONS FOR REQUIREMENTS.

E CONTRACTOR TO PROVIDE 12 GAGE METAL BLOCKING IN STUD WALLS FOR ANCHORAGE OF WALL MOUNTED ITEMS INCLUDING BUT NOT LIMITED TO TOILET ACCESSORIES, WALL CABINETS, WALL MOUNTED TV'S, SHELVING, TOILET PARTITIONS, OWNER FURNISHED EQUIPMENT INDICATED AND SIMILAR ITEMS. FOR TYPE B DWELLING UNITS, PROVIDE METAL BLOCKING IN WALLS FOR FUTURE INSTALLATIONS AS INDICATED. FOR WALL MOUNTED TV'S IN LOUNGES, PROVIDE METAL BLOCKING 24" ABOVE AND BELOW ELECTRICAL JUNCTION BOXES.

F AT ALL HOUSEKEEPING MOP SINKS, PROVIDE WALL PROTECTION WITH 22 GA. STAINLESS STEEL SKIRT 48" AFF AND 30" WIDE AT EACH WALL FROM CORNER, WITH BENT SEAM AT CORNER.

G IN GYPSUM WALLBOARD APPLICATIONS, INSTALL CONTROL JOINTS IN ACCORDANCE WITH ASTM C840 AT LOCATIONS AS INDICATED ON DRAWINGS BY "CJ".

H SHOWER UNITS SHALL BE GROUTED SOLID UNDERNEATH - FILL VOID BETWEEN FLOOR SLAB AND FLOOR OF SHOWER.

I PROVIDE 3/4" EXT. FIRE-RETARDANT-TREATED PLYWOOD BACKER PANELS FROM FLOOR TO 8'-0" AFF, LAYERED OVER GYPSUM BOARD, TO ALL WALLS AT ALL DATA AND ACCESS CONTROL ROOMS. PLYWOOD TO BE PAINTED WALL COLOR.

J PROVIDE MOP AND BROOM HOLDER WITH SHELF PER SPECIFICATION 102800 AND AS INDICATED BY "MBH-1" ABOVE ALL FLOOR SINKS AT HOUSEKEEPING CLOSETS, MOUNTED 60" AFF TO BOTTOM.

K REFER TO A300 SERIES DRAWINGS (ENLARGED PLANS) FOR CONTINUATION OF DIMENSIONS AND PARTITION TYPES.

L REFER TO A026 FOR DESCRIPTION OF ALL PARTITION TYPES.

M REFER TO A100 (1/8" FLOOR PLANS) SERIES DRAWINGS AND A300 SERIES DRAWINGS (ENLARGED PLANS) FOR PARTITION TYPE LOCATIONS.

N REFER TO LS SERIES DRAWING (LIFE SAFETY PLANS) FOR LOCATIONS OF FIRE RATED WALLS AND PARTITIONS.

O REFER TO A000 SERIES DRAWINGS FOR WINDOW TYPES AND DOOR TYPES, SCHEDULES AND DETAILS.

P REFER TO A000 SERIES DRAWINGS FOR INTERIOR FINISH SCHEDULES.

Q REFER TO A300 SERIES DRAWINGS (ENLARGED PLANS) FOR ADDITIONAL PLAN NOTES.

KEY PLAN

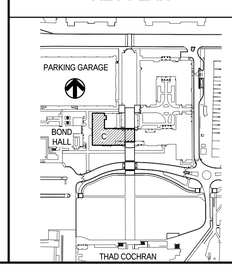

REGISTERED ARCHITECT
Hanbury Evans Wright Vlattas & Company
3483
Tupelo, MS
STATE OF MISSISSIPPI
04 marsh 2013

REGISTERED ARCHITECT
MICHAEL EVANS
4283
STATE OF MISSISSIPPI
04 MAR 2013

THE McCARTY COMPANY
DESIGN GROUP, P.A.
TELEPHONE: (662) 844-4400
FAX: (662) 844-0500
OFFICE ADDRESS: 533 WEST MAIN STREET TUPELO, MS 38804
MAILING ADDRESS: P.O. BOX 440 TUPELO, MS 38802

DESIGN ARCHITECT
Hanbury Evans Wright Vlattas + Company
120 Atlantic Street
Norfolk, VA 23510
757.321.9600
www.hewv.com

PROJECT TITLE
USM - CENTURY PARK SOUTH
IHL# 208-297
HATTIESBURG, MISSISSIPPI

THE UNIVERSITY OF SOUTHERN MISSISSIPPI

PROJECT NO: 2012020
DRAWN BY: JCF
CHECKED BY: JPH
DATE ISSUED: 04 MAR 2013

REVISIONS & ADDENDUMS

SHEET TITLE
BUILDING C - FIFTH FLOOR PLAN

SHEET NUMBER
A105C

3/11/2013 5:25:09 AM

Plot Date: BID DOCUMENTS - 04 MAR 2013

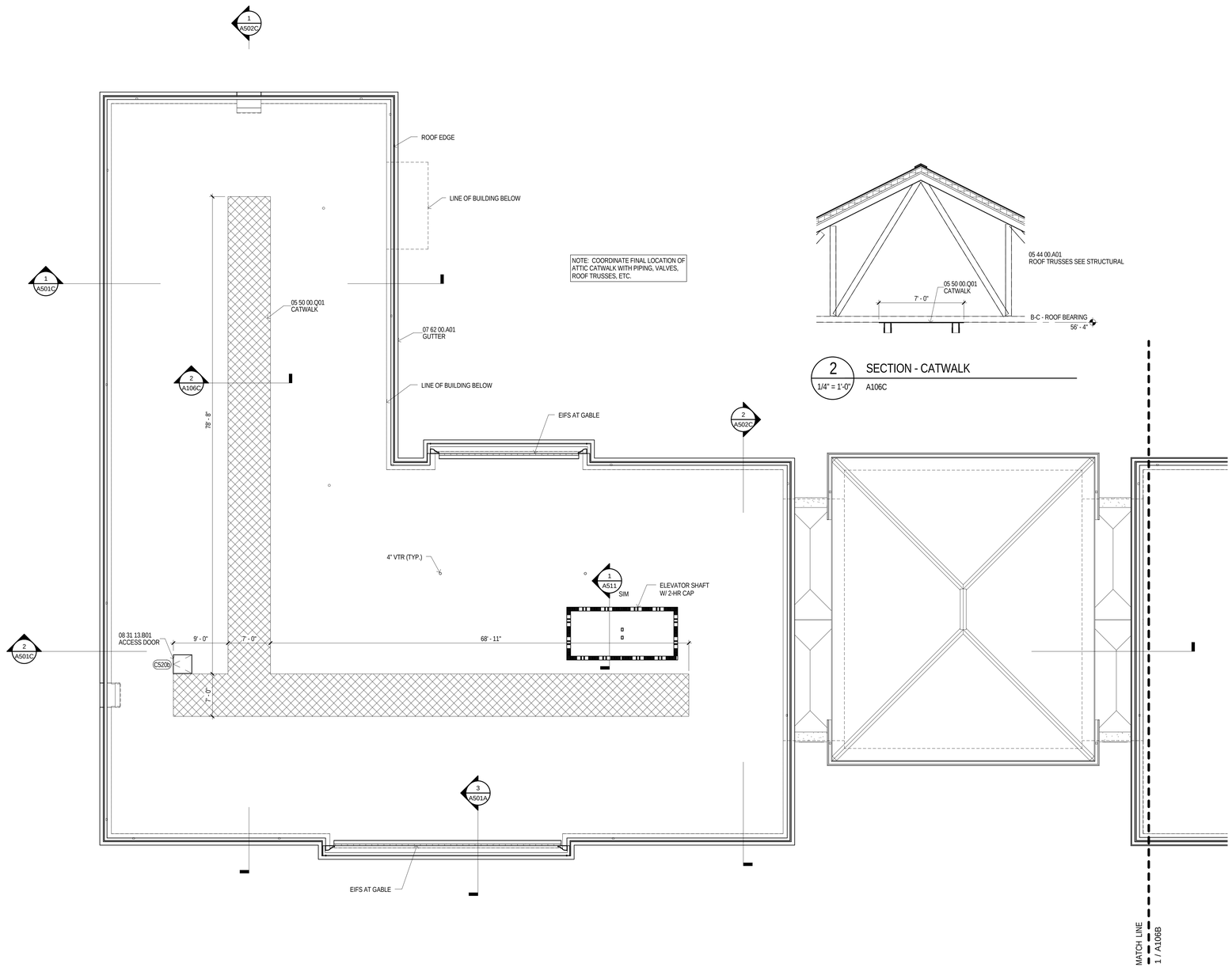

NOTE: COORDINATE FINAL LOCATION OF ATTIC CATWALK WITH PIPING, VALVES, ROOF TRUSSES, ETC.

2 SECTION - CATWALK
1/4" = 1'-0"
A106C

1 BUILDING C - ATTIC FLOOR PLAN
1/8" = 1'-0"

NORTH

0' 8' 16' 24'

MATERIAL KEYING

05 50 00.Q01	CATWALK
07 62 00.A01	GUTTER
08 31 13.B01	ACCESS DOOR

GENERAL NOTES

A ALL INTERIOR AND EXTERIOR DIMENSIONS ARE TO FACE OF STUD, CMU, CONCRETE OR COLUMN CENTERLINE UNLESS NOTED OTHERWISE.

B UNLESS NOTED OTHERWISE, ALL OVERALL EXTERIOR DIMENSIONS INCLUDING BRICK MASONRY OPENINGS ARE TO FACE OF BRICK VENEER.

C WHERE INTERIOR FACE OF FINISH OR CLEAR DIMENSIONS ARE INDICATED FOR COORDINATION PURPOSES OR TO DESIGNATE REQUIRED CODE CLEARANCES, THE DIMENSION IS TYPICALLY DESIGNATED AS "FOF" (FACE OF FINISH) OR "CLEAR".

D PROVIDE COMPLETE FIRE STOP AT ALL STRUCTURAL, MECHANICAL AND ELECTRICAL PENETRATIONS THROUGH ALL FIRE RATED ASSEMBLIES. REFER TO SPECIFICATIONS FOR REQUIREMENTS.

E CONTRACTOR TO PROVIDE 12 GAGE METAL BLOCKING IN STUD WALLS FOR ANCHORAGE OF WALL MOUNTED ITEMS INCLUDING BUT NOT LIMITED TO TOILET ACCESSORIES, WALL CABINETS, WALL MOUNTED TV'S, SHELVING, TOILET PARTITIONS, OWNER FURNISHED EQUIPMENT INDICATED AND SIMILAR ITEMS. FOR TYPE B DWELLING UNITS, PROVIDE METAL BLOCKING IN WALLS FOR FUTURE INSTALLATIONS AS INDICATED. FOR WALL MOUNTED TV'S IN LOUNGES, PROVIDE METAL BLOCKING 24" ABOVE AND BELOW ELECTRICAL JUNCTION BOXES.

F AT ALL HOUSEKEEPING MOP SINKS, PROVIDE WALL PROTECTION WITH 22 GA. STAINLESS STEEL SKIRT 48" AFF AND 30" WIDE AT EACH WALL FROM CORNER, WITH BENT SEAM AT CORNER.

G IN GYPSUM WALLBOARD APPLICATIONS, INSTALL CONTROL JOINTS IN ACCORDANCE WITH ASTM C840 AT LOCATIONS AS INDICATED ON DRAWINGS BY "CJ".

H SHOWER UNITS SHALL BE GROUTED SOLID UNDERNEATH - FILL VOID BETWEEN FLOOR SLAB AND FLOOR OF SHOWER.

I PROVIDE 3/4" EXT. FIRE-RETARDANT-TREATED PLYWOOD BACKER PANELS FROM FLOOR TO 8'-0" AFF, LAYERED OVER GYPSUM BOARD, TO ALL WALLS AT ALL DATA AND ACCESS CONTROL ROOMS. PLYWOOD TO BE PAINTED WALL COLOR.

J PROVIDE MOP AND BROOM HOLDER WITH SHELF PER SPECIFICATION 102800 AND AS INDICATED BY "MBH-1" ABOVE ALL FLOOR SINKS AT HOUSEKEEPING CLOSETS, MOUNTED 60" AFF TO BOTTOM.

K REFER TO A300 SERIES DRAWINGS (ENLARGED PLANS) FOR CONTINUATION OF DIMENSIONS AND PARTITION TYPES.

L REFER TO A026 FOR DESCRIPTION OF ALL PARTITION TYPES.

M REFER TO A100 (1/8" FLOOR PLANS) SERIES DRAWINGS AND A300 SERIES DRAWINGS (ENLARGED PLANS) FOR PARTITION TYPE LOCATIONS.

N REFER TO LS SERIES DRAWING (LIFE SAFETY PLANS) FOR LOCATIONS OF FIRE RATED WALLS AND PARTITIONS.

O REFER TO A000 SERIES DRAWINGS FOR WINDOW TYPES AND DOOR TYPES, SCHEDULES AND DETAILS.

P REFER TO A000 SERIES DRAWINGS FOR INTERIOR FINISH SCHEDULES.

Q REFER TO A300 SERIES DRAWINGS (ENLARGED PLANS) FOR ADDITIONAL PLAN NOTES.

KEY PLAN

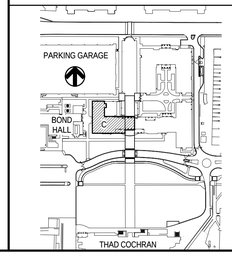

REGISTERED ARCHITECT
Thomas Bernard McCarty
3482
Tupelo, MS
STATE OF MISSISSIPPI
04 March 2013

REGISTERED ARCHITECT
MICHAEL EVANS
4283
04 MAR 2013
STATE OF MISSISSIPPI

THE McCARTY COMPANY
DESIGN GROUP, P.A.
MAILING ADDRESS: P.O. BOX 440 TUPELO, MS 38802
OFFICE ADDRESS: 533 WEST MAIN STREET TUPELO, MS 38804
TELEPHONE: (662) 844-4400
FAX: (662) 844-0500

DESIGN ARCHITECT
Hanbury Evans Wright Vlattas + Company
120 Atlantic Street
Norfolk, VA 23510
757.321.9600
www.hewv.com

PROJECT TITLE
USM - CENTURY PARK SOUTH
IHL# 208-297
HATTIESBURG, MISSISSIPPI

THE UNIVERSITY OF SOUTHERN MISSISSIPPI

PROJECT NO:
- 2012020

DRAWN BY:
- BKS

CHECKED BY:
- JPH

DATE ISSUED:
- 04 MAR 2013

REVISIONS & ADDENDUMS

SHEET TITLE
BUILDING C - ATTIC FLOOR PLAN

SHEET NUMBER
A106C

3/11/2013 5:26:37 AM

Plot Date: BID DOCUMENTS - 04 MAR 2013

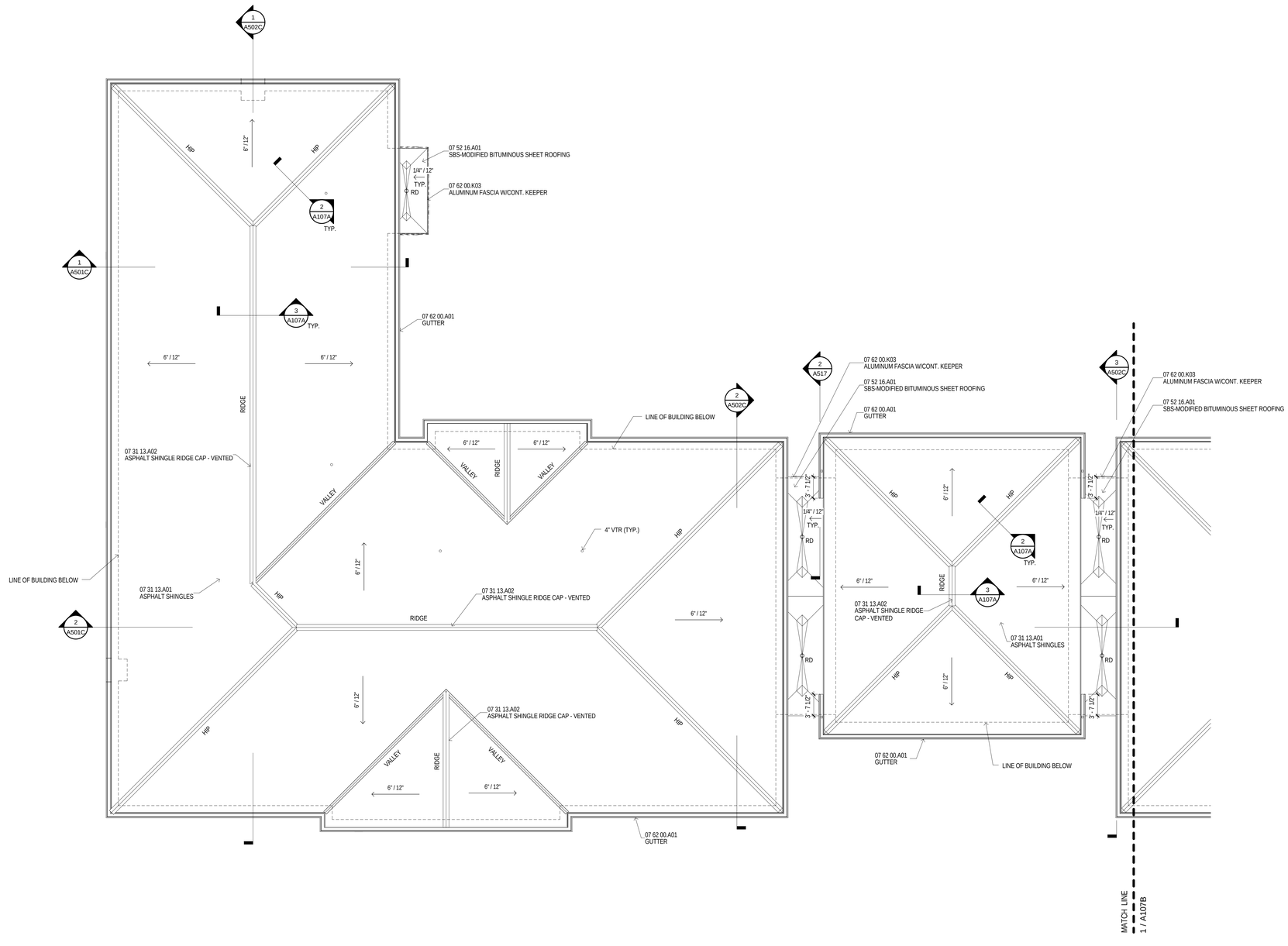

1 BUILDING C - ROOF PLAN
1/8" = 1'-0"

NORTH

0' 8' 16' 24'

MATERIAL KEYING

07 31 13.A01	ASPHALT SHINGLES
07 31 13.A02	ASPHALT SHINGLE RIDGE CAP - VENTED
07 52 16.A01	SBS-MODIFIED BITUMINOUS SHEET ROOFING
07 62 00.A01	GUTTER
07 62 00.K03	ALUMINUM FASCIA W/CONT. KEEPER

LEGEND

○ RD	ROOF DRAIN - SEE PLUMBING

GENERAL NOTES

A ALL INTERIOR AND EXTERIOR DIMENSIONS ARE TO FACE OF STUD, CMU, CONCRETE OR COLUMN CENTERLINE UNLESS NOTED OTHERWISE.

B UNLESS NOTED OTHERWISE, ALL OVERALL EXTERIOR DIMENSIONS INCLUDING BRICK MASONRY OPENINGS ARE TO FACE OF BRICK VENEER.

C WHERE INTERIOR FACE OF FINISH OR CLEAR DIMENSIONS ARE INDICATED FOR COORDINATION PURPOSES OR TO DESIGNATE REQUIRED CODE CLEARANCES, THE DIMENSION IS TYPICALLY DESIGNATED AS "FOF" (FACE OF FINISH) OR "CLEAR".

D PROVIDE COMPLETE FIRE STOP AT ALL STRUCTURAL, MECHANICAL AND ELECTRICAL PENETRATIONS THROUGH ALL FIRE RATED ASSEMBLIES. REFER TO SPECIFICATIONS FOR REQUIREMENTS.

E CONTRACTOR TO PROVIDE 12 GAGE METAL BLOCKING IN STUD WALLS FOR ANCHORAGE OF WALL MOUNTED ITEMS INCLUDING BUT NOT LIMITED TO TOILET ACCESSORIES, WALL CABINETS, WALL MOUNTED TV'S, SHELVING, TOILET PARTITIONS, OWNER FURNISHED EQUIPMENT INDICATED AND SIMILAR ITEMS. FOR TYPE B DWELLING UNITS, PROVIDE METAL BLOCKING IN WALLS FOR FUTURE INSTALLATIONS AS INDICATED. FOR WALL MOUNTED TV'S IN LOUNGES, PROVIDE METAL BLOCKING 24" ABOVE AND BELOW ELECTRICAL JUNCTION BOXES.

F AT ALL HOUSEKEEPING MOP SINKS, PROVIDE WALL PROTECTION WITH 22 GA. STAINLESS STEEL SKIRT 48" AFF AND 30" WIDE AT EACH WALL FROM CORNER, WITH BENT SEAM AT CORNER.

G IN GYPSUM WALLBOARD APPLICATIONS, INSTALL CONTROL JOINTS IN ACCORDANCE WITH ASTM C840 AT LOCATIONS AS INDICATED ON DRAWINGS BY "CJ".

H SHOWER UNITS SHALL BE GROUTED SOLID UNDERNEATH - FILL VOID BETWEEN FLOOR SLAB AND FLOOR OF SHOWER.

I PROVIDE 3/4" EXT. FIRE-RETARDANT-TREATED PLYWOOD BACKER PANELS FROM FLOOR TO 8'-0" AFF., LAYERED OVER GYPSUM BOARD, TO ALL WALLS AT ALL DATA AND ACCESS CONTROL ROOMS. PLYWOOD TO BE PAINTED WALL COLOR.

J PROVIDE MOP AND BROOM HOLDER WITH SHELF PER SPECIFICATION 102800 AND AS INDICATED BY "MBH-1" ABOVE ALL FLOOR SINKS AT HOUSEKEEPING CLOSETS, MOUNTED 60" AFF TO BOTTOM.

K REFER TO A300 SERIES DRAWINGS (ENLARGED PLANS) FOR CONTINUATION OF DIMENSIONS AND PARTITION TYPES.

L REFER TO A026 FOR DESCRIPTION OF ALL PARTITION TYPES.

M REFER TO A100 (1/8" FLOOR PLANS) SERIES DRAWINGS AND A300 SERIES DRAWINGS (ENLARGED PLANS) FOR PARTITION TYPE LOCATIONS.

N REFER TO LS SERIES DRAWING (LIFE SAFETY PLANS) FOR LOCATIONS OF FIRE RATED WALLS AND PARTITIONS.

O REFER TO A000 SERIES DRAWINGS FOR WINDOW TYPES AND DOOR TYPES, SCHEDULES AND DETAILS.

P REFER TO A000 SERIES DRAWINGS FOR INTERIOR FINISH SCHEDULES.

Q REFER TO A300 SERIES DRAWINGS (ENLARGED PLANS) FOR ADDITIONAL PLAN NOTES.

KEY PLAN

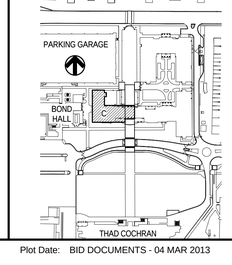

REGISTERED ARCHITECT
Jim Phillips Hamburg's
3487
Tupelo, MS
STATE OF MISSISSIPPI
04 marsh 2013

REGISTERED ARCHITECT
MICHAEL EVANS
4283
04 MAR 2013
STATE OF MISSISSIPPI

THE McCARTY COMPANY
DESIGN GROUP, P.A.
OFFICE ADDRESS: 533 WEST MAIN STREET TUPELO, MS 38804
TELEPHONE: (662) 844-4400
FAX: (662) 844-0500
MAILING ADDRESS: P.O. BOX 440 TUPELO, MS 38802

DESIGN ARCHITECT
Hanbury Evans Wright Vlattas + Company
120 Atlantic Street
Norfolk, VA 23510
757.321.9600
www.hewv.com

PROJECT TITLE
USM - CENTURY PARK SOUTH
IHL# 208-297
HATTIESBURG, MISSISSIPPI

THE UNIVERSITY OF SOUTHERN MISSISSIPPI

PROJECT NO: 2012020
DRAWN BY: BKS
CHECKED BY: JPH
DATE ISSUED: 04 MAR 2013

REVISIONS & ADDENDUMS

SHEET TITLE
BUILDING C - ROOF PLAN

SHEET NUMBER
A107C

3/11/2013 5:28:17 AM

Plot Date: BID DOCUMENTS - 04 MAR 2013

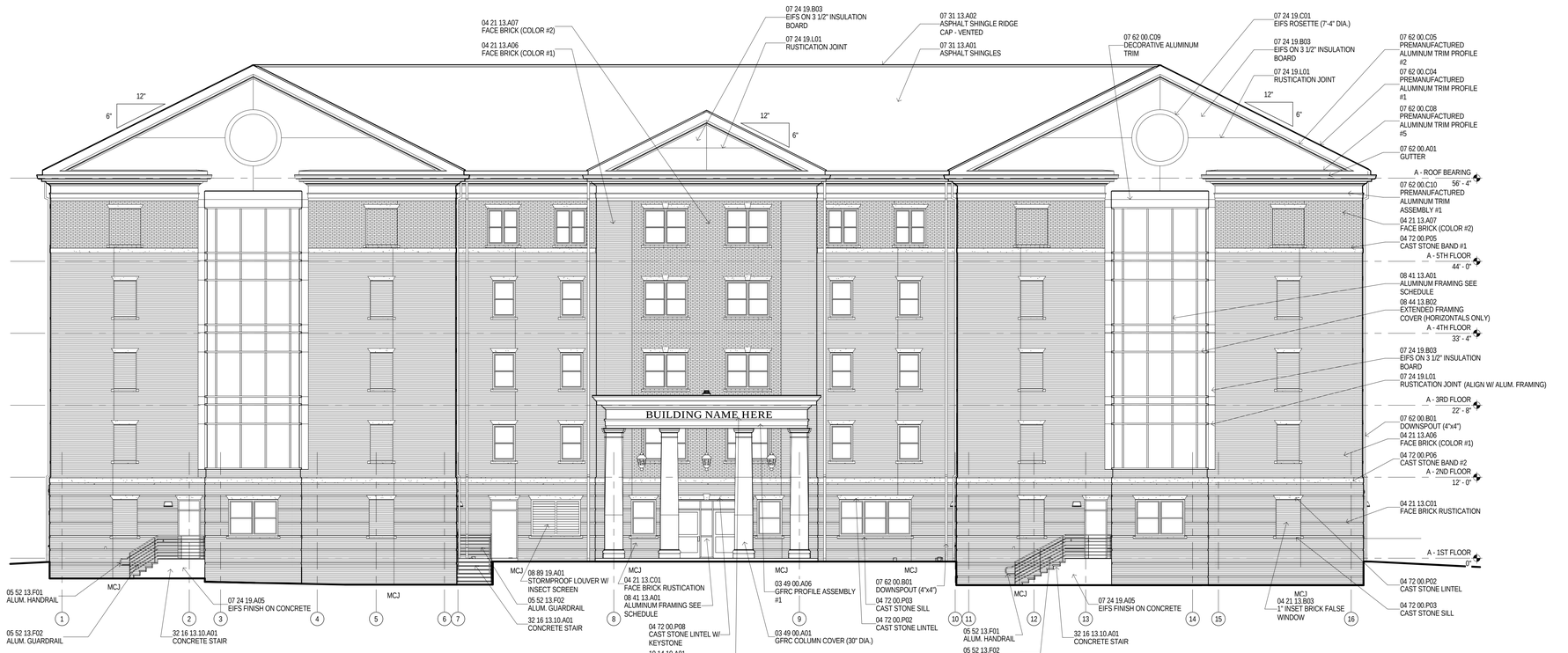

1 — BUILDING A - EXTERIOR ELEVATION - SOUTH

1/8" = 1'-0" A101A

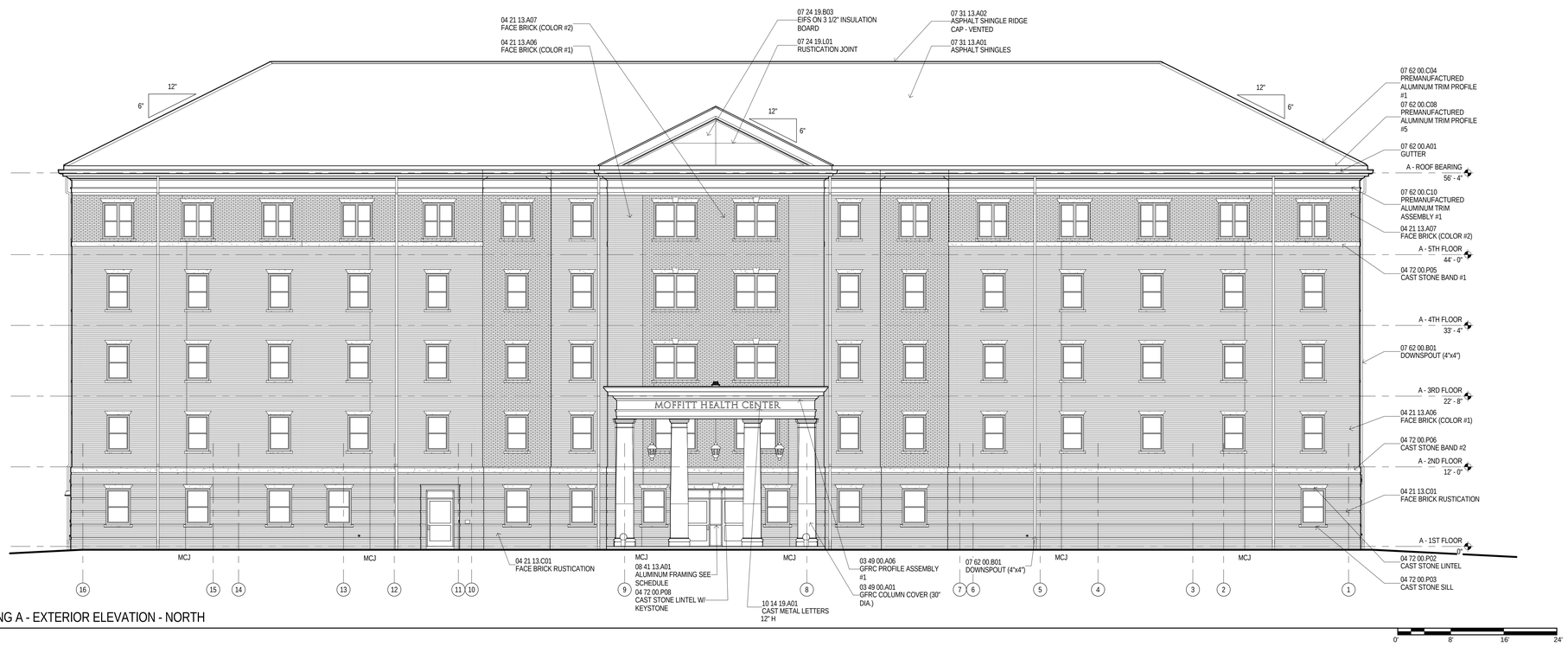

2 — BUILDING A - EXTERIOR ELEVATION - NORTH

1/8" = 1'-0" A101A

MATERIAL KEYING

03 49 00.A01	GFRC COLUMN COVER (30" DIA.)
03 49 00.A06	GFRC PROFILE ASSEMBLY #1
04 21 13.A06	FACE BRICK (COLOR #1)
04 21 13.A07	FACE BRICK (COLOR #2)
04 21 13.B03	1" INSET BRICK FALSE WINDOW
04 21 13.C01	FACE BRICK RUSTICATION
04 72 00.P02	CAST STONE LINTEL
04 72 00.P03	CAST STONE SILL
04 72 00.P05	CAST STONE BAND #1
04 72 00.P06	CAST STONE BAND #2
04 72 00.P08	CAST STONE LINTEL W/ KEYSTONE
05 52 13.F01	ALUM. HANDRAIL
05 52 13.F02	ALUM. GUARDRAIL
07 24 19.A05	EIFS FINISH ON CONCRETE
07 24 19.B03	EIFS ON 3 1/2" INSULATION BOARD
07 24 19.C01	EIFS ROSETTE (7'-4" DIA.)
07 24 19.L01	RUSTICATION JOINT
07 31 13.A01	ASPHALT SHINGLES
07 31 13.A02	ASPHALT SHINGLE RIDGE CAP - VENTED
07 62 00.A01	GUTTER
07 62 00.B01	DOWNSPOUT (4"x4")
07 62 00.C04	PREMANUFACTURED ALUMINUM TRIM PROFILE #1
07 62 00.C05	PREMANUFACTURED ALUMINUM TRIM PROFILE #2
07 62 00.C08	PREMANUFACTURED ALUMINUM TRIM PROFILE #5
07 62 00.C09	DECORATIVE ALUMINUM TRIM
07 62 00.C10	PREMANUFACTURED ALUMINUM TRIM ASSEMBLY #1
08 41 13.A01	ALUMINUM FRAMING SEE SCHEDULE
08 44 13.B02	EXTENDED FRAMING COVER
08 89 19.A01	STORMPROOF LOUVER W/ INSECT SCREEN
10 14 19.A01	CAST METAL LETTERS
32 16 13.10.A01	CONCRETE STAIR

BRICK LEGEND

04 21 13.A06
FACE BRICK (COLOR #1)

04 21 13.A07
FACE BRICK (COLOR #2)

GENERAL NOTES

A "MCJ" INDICATED MASONRY CONTROL JOINT IN FACE BRICK. TYPICAL. MCJ'S ARE TO BE CONTINUOUS AROUND ENDS OF CAST STONE LINTELS, SILLS, BANDS, ETC. WHERE MCJ'S DO NOT ALIGN WITH BRICK SOLDIER COURSING, SHIFT JOINT - DO NOT CUT BRICK AT SOLDIER COURSE.

B "DS" INDICATED DOWNSPOUT PER SPECIFICATIONS. HOLD 1" OFF FACE OF BUILDING UNLESS OTHERWISE NOTED. SEE CIVIL STORM DRAINAGE PLANS FOR DOWNSPOUT STORM DRAINAGE TIE-INS BELOW GRADE. PROVIDE CAST IRON DOWNSPOUT BOOTS AT BASE OF BUILDING PER SPECIFICATIONS.

C SEE SHEET A500 SERIES DRAWINGS FOR COMPLETE DETAILS OF FACTORY-FORMED METAL TRIM PROFILES, GRFC PROFILES AND CAST STONE PROFILES.

D ALL DOWNSPOUTS ARE TO TIE INTO UNDERGROUND STORM SEWER VIA CAST IRON DOWNSPOUT BOOTS. SEE CIVIL FOR BOOT DETAIL AND STORM SEWER TIE INS.

KEY PLAN

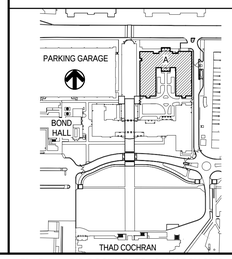

REGISTERED ARCHITECT
Thomas Alexander Wright
3487
Tupelo, MS
STATE OF MISSISSIPPI
04 MARCH 2013

MICHAEL EVANS
4283
04 MAR 2013
STATE OF MISSISSIPPI

THE McCARTY COMPANY
DESIGN GROUP, P.A.
TELEPHONE: (662) 844-4400
FAX: (662) 844-0500
OFFICE ADDRESS: 533 WEST MAIN STREET TUPELO, MS 38804
MAILING ADDRESS: P.O. BOX 440 TUPELO, MS 38802

DESIGN ARCHITECT
Hanbury Evans Wright Vlattas + Company
120 Atlantic Street
Norfolk, VA 23510
757.321.9600
www.hewv.com

PROJECT TITLE
USM - CENTURY PARK SOUTH
IHL# 208-297
HATTIESBURG, MISSISSIPPI

THE UNIVERSITY OF SOUTHERN MISSISSIPPI

PROJECT NO: 2012020
DRAWN BY: MPS
CHECKED BY: JPH
DATE ISSUED: 04 MAR 2013

REVISIONS & ADDENDUMS

SHEET TITLE
BUILDING A - EXTERIOR ELEVATIONS

SHEET NUMBER
A201A

3/11/2013 7:28:38 AM

Plot Date: BID DOCUMENTS - 04 MARCH 2013

1
1/8" = 1'-0"
BUILDING A - EXTERIOR ELEVATION - EAST
A101A

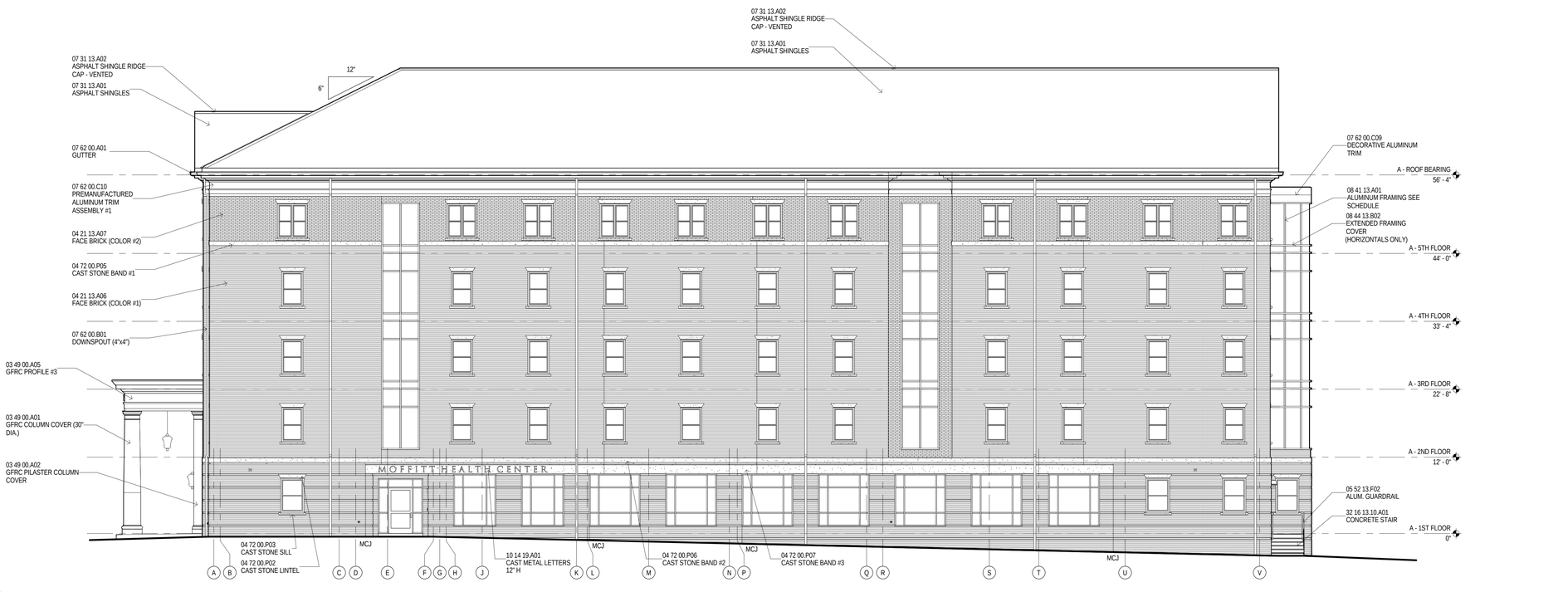

2
1/8" = 1'-0"
BUILDING A - EXTERIOR ELEVATION - WEST
A101A

MATERIAL KEYING

03 49 00.A01	GFRC COLUMN COVER (30" DIA.)
03 49 00.A02	GFRC PILASTER COLUMN COVER
03 49 00.A05	GFRC PROFILE #3
04 21 13.A06	FACE BRICK (COLOR #1)
04 21 13.A07	FACE BRICK (COLOR #2)
04 21 13.C01	FACE BRICK RUSTICATION
04 72 00.P02	CAST STONE LINTEL
04 72 00.P03	CAST STONE SILL
04 72 00.P05	CAST STONE BAND #1
04 72 00.P06	CAST STONE BAND #2
04 72 00.P07	CAST STONE BAND #3
05 52 13.F02	ALUM. GUARDRAIL
07 31 13.A01	ASPHALT SHINGLES
07 31 13.A02	ASPHALT SHINGLE RIDGE CAP - VENTED
07 62 00.A01	GUTTER
07 62 00.B01	DOWNSPOUT (4"x4")
07 62 00.C09	DECORATIVE ALUMINUM TRIM
07 62 00.C10	PREMANUFACTURED ALUMINUM TRIM ASSEMBLY #1
08 41 13.A01	ALUMINUM FRAMING SEE SCHEDULE
08 44 13.A01	CURTAIN WALL SYSTEM
08 44 13.B02	EXTENDED FRAMING COVER
08 89 19.A01	STORMPROOF LOUVER W/ INSECT SCREEN
10 14 19.A01	CAST METAL LETTERS
32 16 13.10.A01	CONCRETE STAIR

BRICK LEGEND

04 21 13.A06
FACE BRICK (COLOR #1)

04 21 13.A07
FACE BRICK (COLOR #2)

GENERAL NOTES

A "MCJ" INDICATED MASONRY CONTROL JOINT IN FACE BRICK, TYPICAL. MCJ'S ARE TO BE CONTINUOUS AROUND ENDS OF CAST STONE LINTELS, SILLS, BANDS, ETC. WHERE MCJ'S DO NOT ALIGN WITH BRICK SOLDIER COURSING, SHIFT JOINT - DO NOT CUT BRICK AT SOLDIER COURSE.

B "DS" INDICATED DOWNSPOUT PER SPECIFICATIONS. HOLD 1" OFF FACE OF BUILDING UNLESS OTHERWISE NOTED. SEE CIVIL STORM DRAINAGE PLANS FOR DOWNSPOUT STORM DRAINAGE TIE-INS BELOW GRADE. PROVIDE CAST IRON DOWNSPOUT BOOTS AT BASE OF BUILDING PER SPECIFICATIONS.

C SEE SHEET A500 SERIES DRAWINGS FOR COMPLETE DETAILS OF FACTORY-FORMED METAL TRIM PROFILES, GRFC PROFILES AND CAST STONE PROFILES.

D ALL DOWNSPOUTS ARE TO TIE INTO UNDERGROUND STORM SEWER VIA CAST IRON DOWNSPOUT BOOTS. SEE CIVIL FOR BOOT DETAIL AND STORM SEWER TIE INS.

KEY PLAN

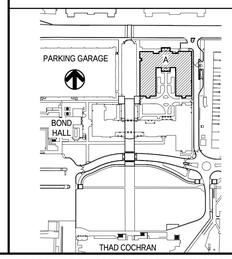

REGISTERED ARCHITECT
Thomas McLaughlin's Jr.
3449
Tupelo, MS
STATE OF MISSISSIPPI
04 MARCH 2013

REGISTERED ELECTRICAL ENGINEER
MICHAEL EVANS
4283
04 MAR 2013
STATE OF MISSISSIPPI

THE McCARTY COMPANY
DESIGN GROUP, P.A.
MAILING ADDRESS:
P.O. BOX 440
TUPELO, MS 38802
OFFICE ADDRESS:
533 WEST MAIN STREET
TUPELO, MS 38804
TELEPHONE:
(662) 844-4400
FAX:
(662) 844-0500

DESIGN ARCHITECT
Hanbury Evans Wright Vlattas + Company
120 Atlantic Street
Norfolk, VA 23510
757.321.9600
www.hewv.com

PROJECT TITLE
USM - CENTURY PARK SOUTH
IHL# 208-297
HATTIESBURG, MISSISSIPPI

THE UNIVERSITY OF SOUTHERN MISSISSIPPI

PROJECT NO:
- 2012020

DRAWN BY:
- MPS

CHECKED BY:
- JPH

DATE ISSUED:
- 04 MAR 2013

REVISIONS & ADDENDUMS

SHEET TITLE
BUILDING A - EXTERIOR ELEVATIONS

SHEET NUMBER
A202A

3/11/2013 7:29:29 AM

Plot Date: BID DOCUMENTS - 04 MARCH 2013

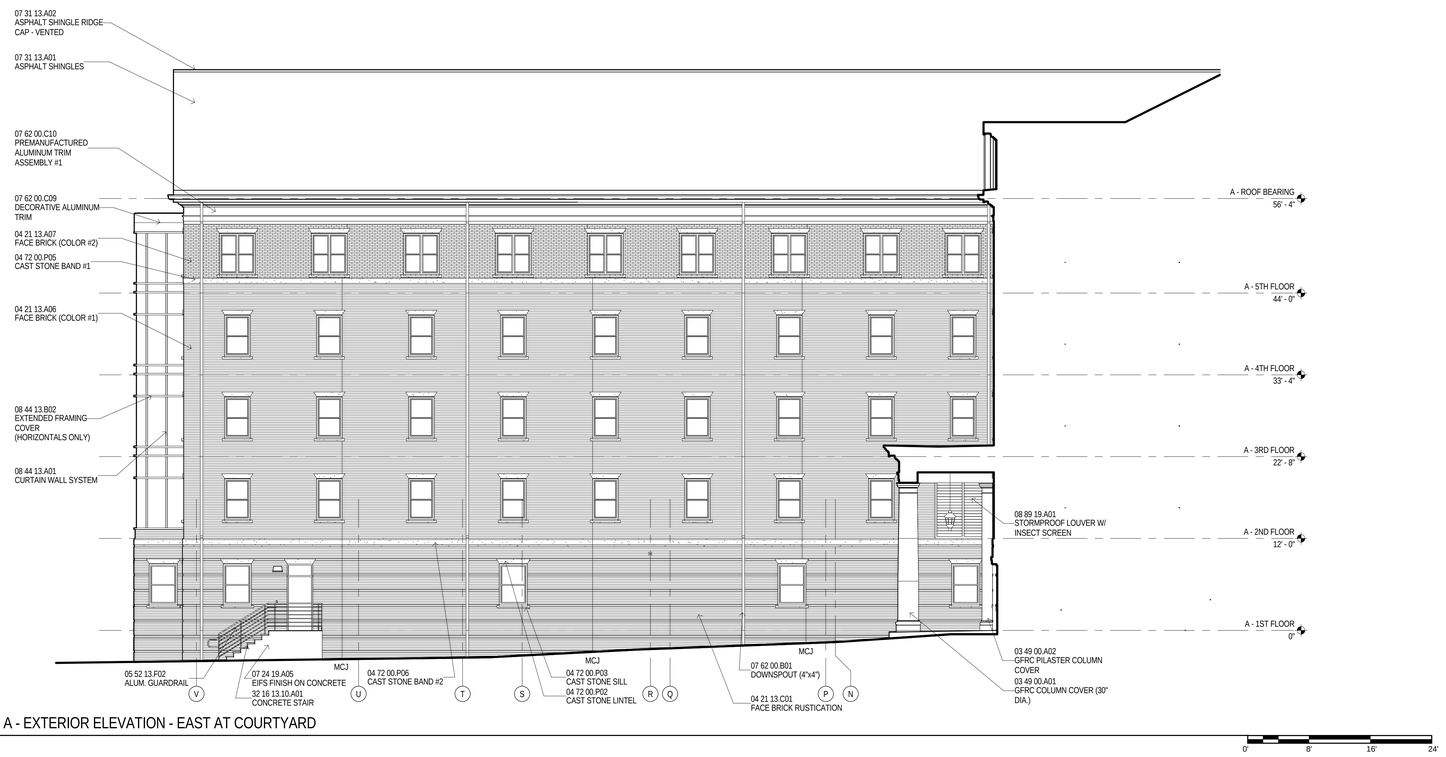

1 — BUILDING A - EXTERIOR ELEVATION - EAST AT COURTYARD

1/8" = 1'-0" — A101A

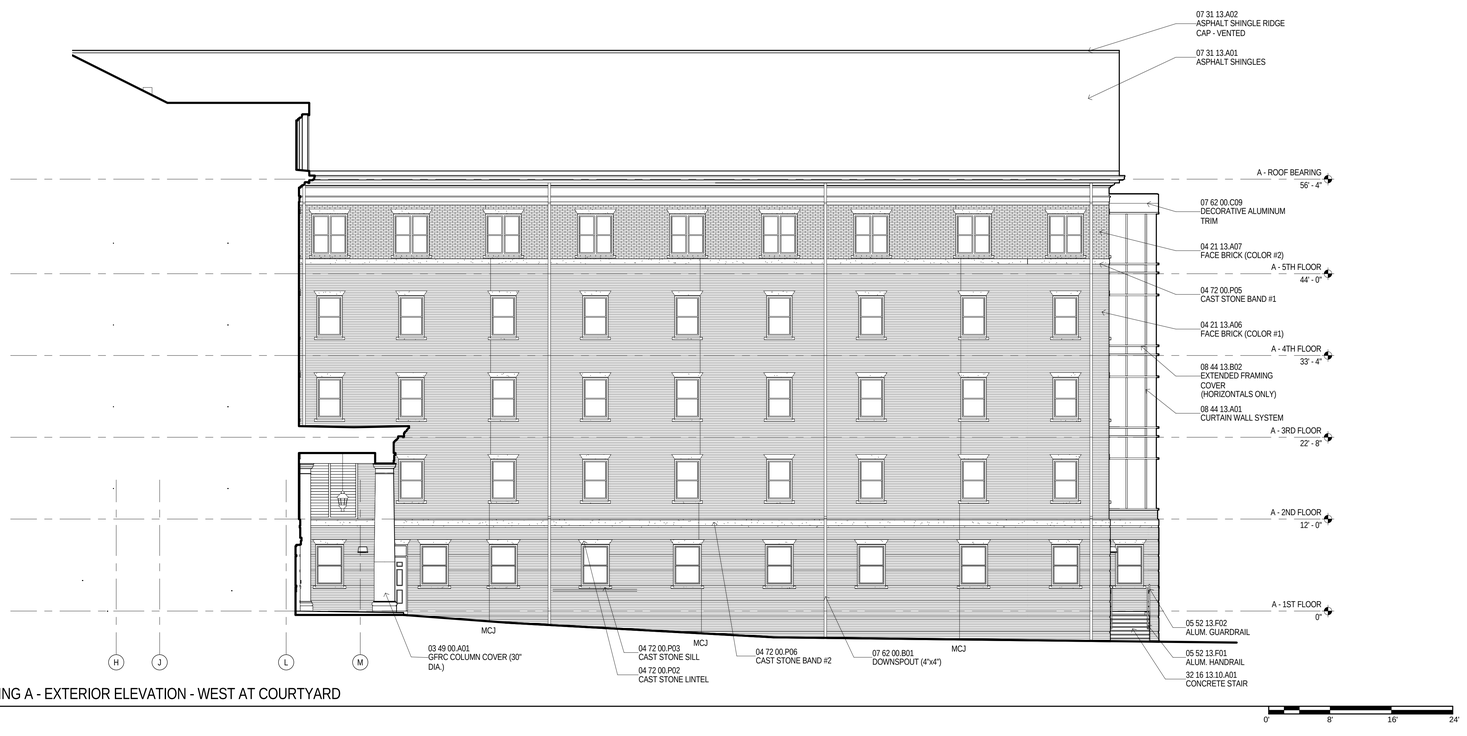

2 — BUILDING A - EXTERIOR ELEVATION - WEST AT COURTYARD

1/8" = 1'-0" — A101A

MATERIAL KEYING

03 49 00.A01	GFRC COLUMN COVER (30" DIA.)
03 49 00.A02	GFRC PILASTER COLUMN COVER
04 21 13.A06	FACE BRICK (COLOR #1)
04 21 13.A07	FACE BRICK (COLOR #2)
04 21 13.C01	FACE BRICK RUSTICATION
04 72 00.P02	CAST STONE LINTEL
04 72 00.P03	CAST STONE SILL
04 72 00.P05	CAST STONE BAND #1
04 72 00.P06	CAST STONE BAND #2
05 52 13.F01	ALUM. HANDRAIL
05 52 13.F02	ALUM. GUARDRAIL
07 24 19.A05	EIFS FINISH ON CONCRETE
07 31 13.A01	ASPHALT SHINGLES
07 31 13.A02	ASPHALT SHINGLE RIDGE CAP - VENTED
07 62 00.B01	DOWNSPOUT (4"x4")
07 62 00.C09	DECORATIVE ALUMINUM TRIM
07 62 00.C10	PREMANUFACTURED ALUMINUM TRIM ASSEMBLY #1
08 44 13.A01	CURTAIN WALL SYSTEM
08 44 13.B02	EXTENDED FRAMING COVER
08 89 19.A01	STORMPROOF LOUVER W/ INSECT SCREEN
32 16 13.10.A01	CONCRETE STAIR

BRICK LEGEND

04 21 13.A06
FACE BRICK (COLOR #1)

04 21 13.A07
FACE BRICK (COLOR #2)

GENERAL NOTES

A "MCJ" INDICATED MASONRY CONTROL JOINT IN FACE BRICK, TYPICAL. MCJ'S ARE TO BE CONTINUOUS AROUND ENDS OF CAST STONE LINTELS, SILLS, BANDS, ETC. WHERE MCJ'S DO NOT ALIGN WITH BRICK SOLDIER COURSING, SHIFT JOINT - DO NOT CUT BRICK AT SOLDIER COURSE.

B "DS" INDICATED DOWNSPOUT PER SPECIFICATIONS. HOLD 1" OFF FACE OF BUILDING UNLESS OTHERWISE NOTED. SEE CIVIL STORM DRAINAGE PLANS FOR DOWNSPOUT STORM DRAINAGE TIE-INS BELOW GRADE. PROVIDE CAST IRON DOWNSPOUT BOOTS AT BASE OF BUILDING PER SPECIFICATIONS.

C SEE SHEET A500 SERIES DRAWINGS FOR COMPLETE DETAILS OF FACTORY-FORMED METAL TRIM PROFILES, GRFC PROFILES AND CAST STONE PROFILES.

D ALL DOWNSPOUTS ARE TO TIE INTO UNDERGROUND STORM SEWER VIA CAST IRON DOWNSPOUT BOOTS. SEE CIVIL FOR BOOT DETAIL AND STORM SEWER TIE INS.

KEY PLAN

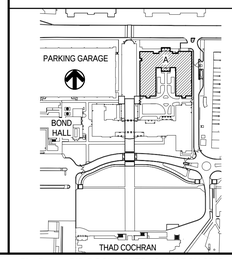

REGISTERED ARCHITECT
Thomas Alexander Saunders
3483
Tupelo, MS
STATE OF MISSISSIPPI
04 march 2013

REGISTERED PROFESSIONAL ENGINEER
MICHAEL EVANS
4283
04 MAR 2013
STATE OF MISSISSIPPI

THE McCARTY COMPANY
DESIGN GROUP, P.A.
MAILING ADDRESS:
P.O. BOX 440
TUPELO, MS 38802
OFFICE ADDRESS:
533 WEST MAIN STREET
TUPELO, MS 38804
TELEPHONE:
(662) 844-4400
FAX:
(662) 844-0500

DESIGN ARCHITECT
Hanbury Evans Wright Vlattas + Company
120 Atlantic Street
Norfolk, VA 23510
757.321.9600
www.hewv.com

PROJECT TITLE
USM - CENTURY PARK SOUTH
IHL# 208-297
HATTIESBURG, MISSISSIPPI

THE UNIVERSITY OF SOUTHERN MISSISSIPPI

PROJECT NO:
- 2012020

DRAWN BY:
- MPS

CHECKED BY:
- JPH

DATE ISSUED:
- 04 MAR 2013

REVISIONS & ADDENDUMS

SHEET TITLE
BUILDING A - EXTERIOR ELEVATIONS

SHEET NUMBER
A203A

3/11/2013 7:30:11 AM

Plot Date: BID DOCUMENTS - 04 MARCH 2013

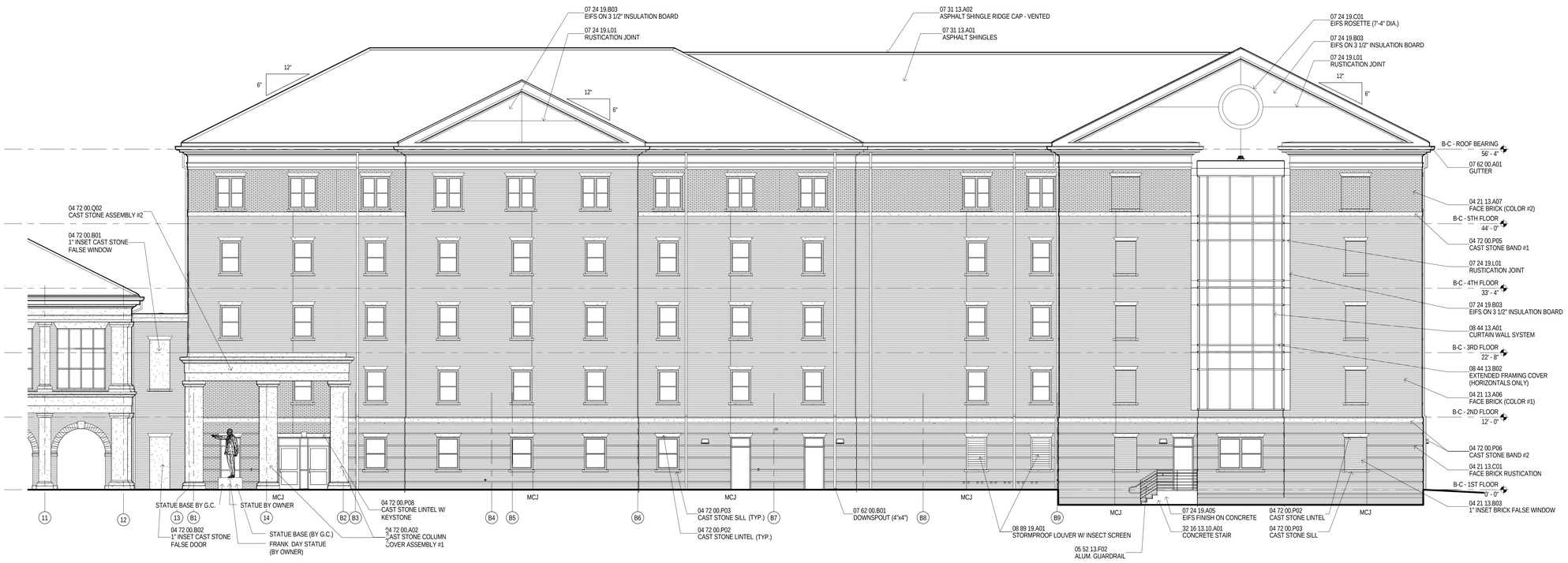

1 BUILDING B - EXTERIOR ELEVATION - SOUTH

1/8" = 1'-0" A101B

2 BUILDING B - EXTERIOR ELEVATION - NORTH

1/8" = 1'-0" A101B

MATERIAL KEYING

03 49 00.A01	GFRC COLUMN COVER (30" DIA.)
03 49 00.A06	GFRC PROFILE ASSEMBLY #1
04 21 13.A06	FACE BRICK (COLOR #1)
04 21 13.A07	FACE BRICK (COLOR #2)
04 21 13.A08	2" BRICK PILASTER
04 21 13.B03	1" INSET BRICK FALSE WINDOW
04 21 13.C01	FACE BRICK RUSTICATION
04 72 00.A02	CAST STONE COLUMN COVER ASSEMBLY #1
04 72 00.B01	1" INSET CAST STONE FALSE WINDOW
04 72 00.B02	1" INSET CAST STONE FALSE DOOR
04 72 00.P02	CAST STONE LINTEL
04 72 00.P03	CAST STONE SILL
04 72 00.P05	CAST STONE BAND #1
04 72 00.P06	CAST STONE BAND #2
04 72 00.P07	CAST STONE BAND #3
04 72 00.P08	CAST STONE LINTEL W/ KEYSTONE
04 72 00.Q02	CAST STONE ASSEMBLY #2
05 52 13.F02	ALUM. GUARDRAIL
07 24 19.A05	EIFS FINISH ON CONCRETE
07 24 19.B03	EIFS ON 3 1/2" INSULATION BOARD
07 24 19.C01	EIFS ROSETTE (7'-4" DIA.)
07 24 19.L01	RUSTICATION JOINT
07 31 13.A01	ASPHALT SHINGLES
07 31 13.A02	ASPHALT SHINGLE RIDGE CAP - VENTED
07 62 00.A01	GUTTER
07 62 00.B01	DOWNSPOUT (4"x4")
07 62 00.C04	PREMANUFACTURED ALUMINUM TRIM PROFILE #1
07 62 00.C05	PREMANUFACTURED ALUMINUM TRIM PROFILE #2
07 62 00.C08	PREMANUFACTURED ALUMINUM TRIM PROFILE #5
07 62 00.C09	DECORATIVE ALUMINUM TRIM
07 62 00.C10	PREMANUFACTURED ALUMINUM TRIM ASSEMBLY #1
08 44 13.A01	CURTAIN WALL SYSTEM
08 44 13.B02	EXTENDED FRAMING COVER
08 89 19.A01	STORMPROOF LOUVER W/ INSECT SCREEN
10 14 19.A01	CAST METAL LETTERS
32 16 13.10.A01	CONCRETE STAIR

BRICK LEGEND

04 21 13.A06
FACE BRICK (COLOR #1)

04 21 13.A07
FACE BRICK (COLOR #2)

GENERAL NOTES

A "MCJ" INDICATED MASONRY CONTROL JOINT IN FACE BRICK, TYPICAL. MCJ'S ARE TO BE CONTINUOUS AROUND ENDS OF CAST STONE LINTELS, SILLS, BANDS, ETC. WHERE MCJ'S DO NOT ALIGN WITH BRICK SOLDIER COURSING, SHIFT JOINT - DO NOT CUT BRICK AT SOLDIER COURSE.

B "DS" INDICATED DOWNSPOUT PER SPECIFICATIONS. HOLD 1" OFF FACE OF BUILDING UNLESS OTHERWISE NOTED. SEE CIVIL STORM DRAINAGE PLANS FOR DOWNSPOUT STORM DRAINAGE TIE-INS BELOW GRADE. PROVIDE CAST IRON DOWNSPOUT BOOTS AT BASE OF BUILDING PER SPECIFICATIONS.

C SEE SHEET A500 SERIES DRAWINGS FOR COMPLETE DETAILS OF FACTORY-FORMED METAL TRIM PROFILES, GRFC PROFILES AND CAST STONE PROFILES.

D ALL DOWNSPOUTS ARE TO TIE INTO UNDERGROUND STORM SEWER VIA CAST IRON DOWNSPOUT BOOTS. SEE CIVIL FOR BOOT DETAIL AND STORM SEWER TIE-INS.

KEY PLAN

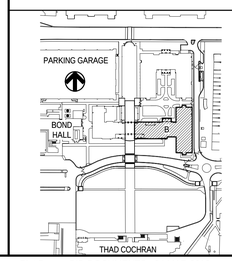

REGISTERED ARCHITECT
Thomas Hollaunder's Wright
3467
Tupelo, MS
STATE OF MISSISSIPPI
04 MARCH 2013

REGISTERED ARCHITECT
MICHAEL EVANS
4283
08 MAR 2013
STATE OF MISSISSIPPI

THE McCARTY COMPANY
DESIGN GROUP, P.A.
TELEPHONE: (662) 844-4400
FAX: (662) 844-0500
OFFICE ADDRESS: 533 WEST MAIN STREET TUPELO, MS 38804
MAILING ADDRESS: P.O. BOX 440 TUPELO, MS 38802

DESIGN ARCHITECT
Hanbury Evans Wright Vlattas + Company
120 Atlantic Street
Norfolk, VA 23510
757.321.9600
www.hewv.com

PROJECT TITLE
USM - CENTURY PARK SOUTH
IHL# 208-297
HATTIESBURG, MISSISSIPPI

THE UNIVERSITY OF SOUTHERN MISSISSIPPI

PROJECT NO: 2012020
DRAWN BY: MPS
CHECKED BY: JPH
DATE ISSUED: 04 MAR 2013

REVISIONS & ADDENDUMS

SHEET TITLE
BUILDING B - EXTERIOR ELEVATIONS

SHEET NUMBER
A201B

3/11/2013 7:41:00 AM

Plot Date: BID DOCUMENTS - 04 MAR 2013

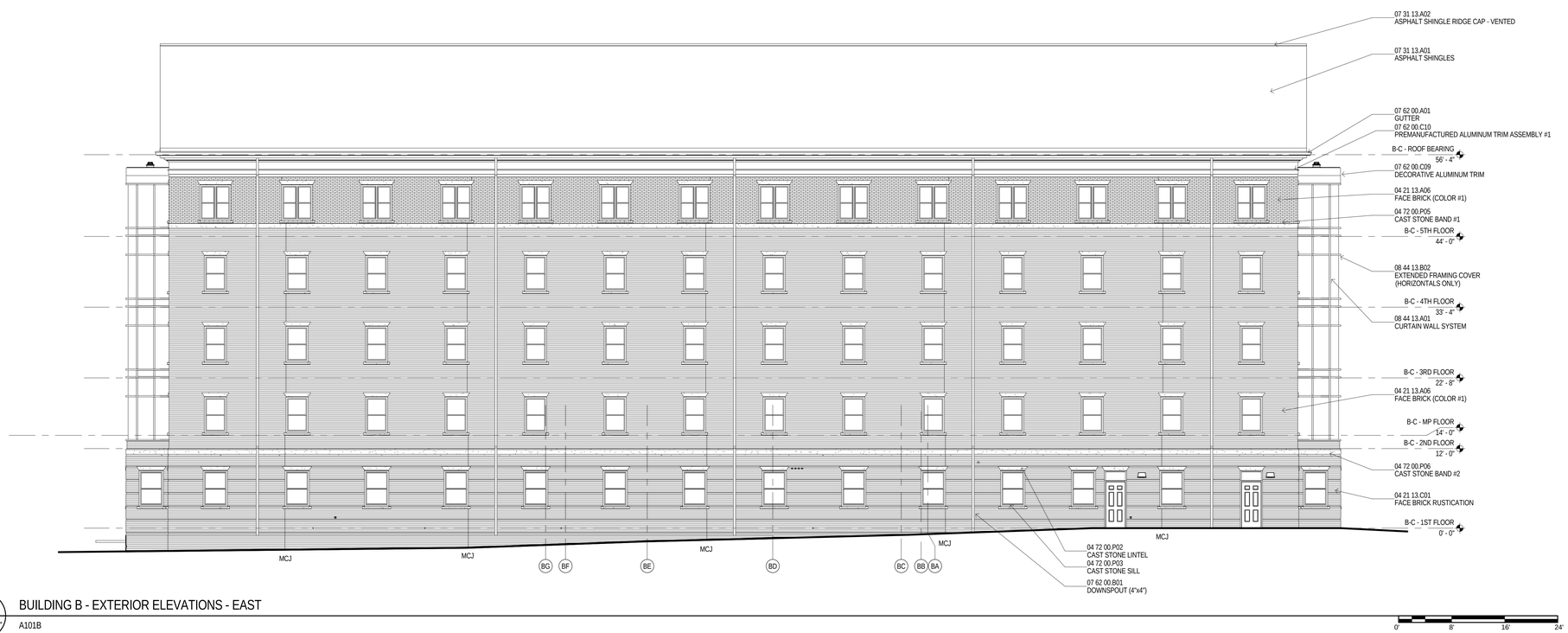

1 BUILDING B - EXTERIOR ELEVATIONS - EAST

1/8" = 1'-0" A101B

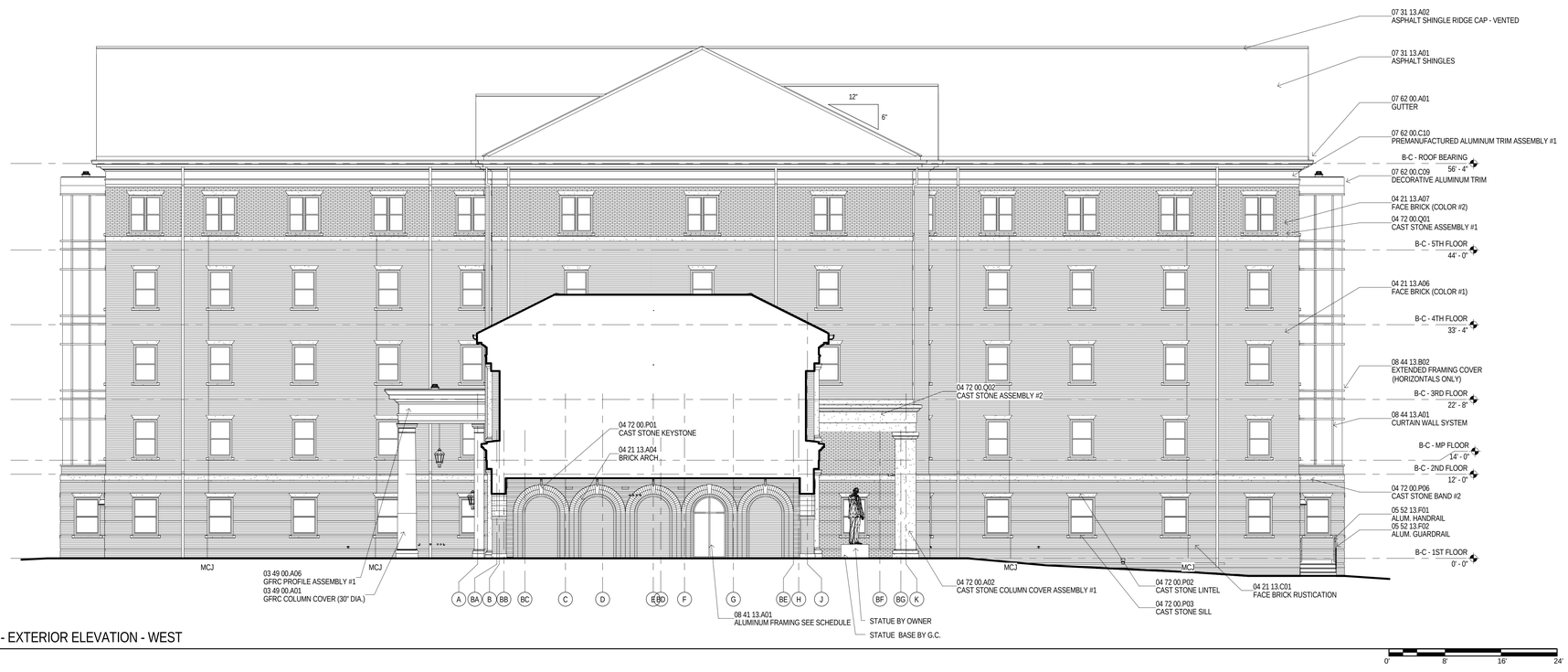

2 BUILDING B - EXTERIOR ELEVATION - WEST

1/8" = 1'-0" A101B

MATERIAL KEYING

03 49 00.A01	GFRC COLUMN COVER (30" DIA.)
03 49 00.A06	GFRC PROFILE ASSEMBLY #1
04 21 13.A04	BRICK ARCH
04 21 13.A06	FACE BRICK (COLOR #1)
04 21 13.A07	FACE BRICK (COLOR #2)
04 21 13.C01	FACE BRICK RUSTICATION
04 72 00.A02	CAST STONE COLUMN COVER ASSEMBLY #1
04 72 00.P01	CAST STONE KEYSTONE
04 72 00.P02	CAST STONE LINTEL
04 72 00.P03	CAST STONE SILL
04 72 00.P05	CAST STONE BAND #1
04 72 00.P06	CAST STONE BAND #2
04 72 00.Q01	CAST STONE ASSEMBLY #1
04 72 00.Q02	CAST STONE ASSEMBLY #2
05 52 13.F01	ALUM. HANDRAIL
05 52 13.F02	ALUM. GUARDRAIL
07 31 13.A01	ASPHALT SHINGLES
07 31 13.A02	ASPHALT SHINGLE RIDGE CAP - VENTED
07 62 00.A01	GUTTER
07 62 00.B01	DOWNSPOUT (4"x4")
07 62 00.C09	DECORATIVE ALUMINUM TRIM
07 62 00.C10	PREMANUFACTURED ALUMINUM TRIM ASSEMBLY #1
08 41 13.A01	ALUMINUM FRAMING SEE SCHEDULE
08 44 13.A01	CURTAIN WALL SYSTEM
08 44 13.B02	EXTENDED FRAMING COVER

BRICK LEGEND

04 21 13.A06
FACE BRICK (COLOR #1)

04 21 13.A07
FACE BRICK (COLOR #2)

GENERAL NOTES

A "MCJ" INDICATED MASONRY CONTROL JOINT IN FACE BRICK, TYPICAL. MCJ'S ARE TO BE CONTINUOUS AROUND ENDS OF CAST STONE LINTELS, SILLS, BANDS, ETC. WHERE MCJ'S DO NOT ALIGN WITH BRICK SOLDIER COURSING, SHIFT JOINT - DO NOT CUT BRICK AT SOLDIER COURSE.

B "DS" INDICATED DOWNSPOUT PER SPECIFICATIONS. HOLD 1" OFF FACE OF BUILDING UNLESS OTHERWISE NOTED. SEE CIVIL STORM DRAINAGE PLANS FOR DOWNSPOUT STORM DRAINAGE TIE-INS BELOW GRADE. PROVIDE CAST IRON DOWNSPOUT BOOTS AT BASE OF BUILDING PER SPECIFICATIONS.

C SEE SHEET A500 SERIES DRAWINGS FOR COMPLETE DETAILS OF FACTORY-FORMED METAL TRIM PROFILES, GRFC PROFILES AND CAST STONE PROFILES.

D ALL DOWNSPOUTS ARE TO TIE INTO UNDERGROUND STORM SEWER VIA CAST IRON DOWNSPOUT BOOTS. SEE CIVIL FOR BOOT DETAIL AND STORM SEWER TIE-INS.

KEY PLAN

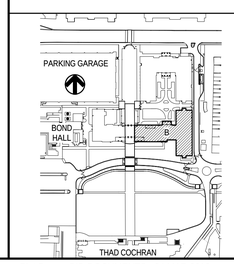

REGISTERED ARCHITECT
Thomas McLaughlin's
3482
Tupelo, MS
STATE OF MISSISSIPPI
04 MARCH 2013

MICHAEL EVANS
4283
04 MAR 2013
STATE OF MISSISSIPPI
REGISTERED ARCHITECT

THE McCARTY COMPANY
DESIGN GROUP, P.A.
MAILING ADDRESS:
P.O. BOX 440
TUPELO, MS 38802
OFFICE ADDRESS:
533 WEST MAIN STREET
TUPELO, MS 38804
TELEPHONE:
(662) 844-4400
FAX:
(662) 844-0500

DESIGN ARCHITECT
Hanbury Evans Wright Vlattas + Company
120 Atlantic Street
Norfolk, VA 23510
757.321.9600
www.hewv.com

PROJECT TITLE
USM - CENTURY PARK SOUTH
IHL# 208-297
HATTIESBURG, MISSISSIPPI

THE UNIVERSITY OF SOUTHERN MISSISSIPPI

PROJECT NO:
- 2012020

DRAWN BY:
- MPS

CHECKED BY:
- JPH

DATE ISSUED:
- 04 MAR 2013

REVISIONS & ADDENDUMS

SHEET TITLE
BUILDING B - EXTERIOR ELEVATIONS

SHEET NUMBER
A202B

3/11/2013 7:43:07 AM

Plot Date: BID DOCUMENTS - 04 MAR 2013

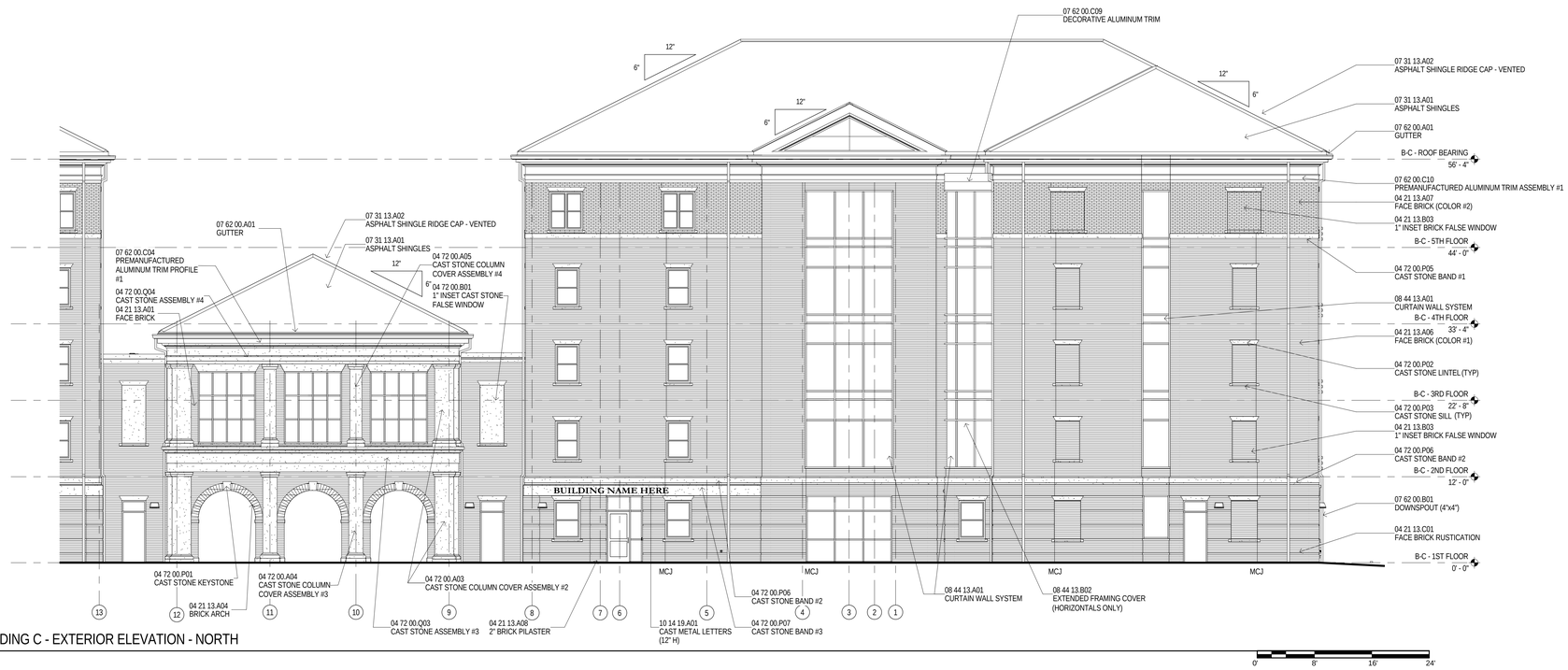

1
1/8" = 1'-0"
BUILDING C - EXTERIOR ELEVATION - NORTH
A101B

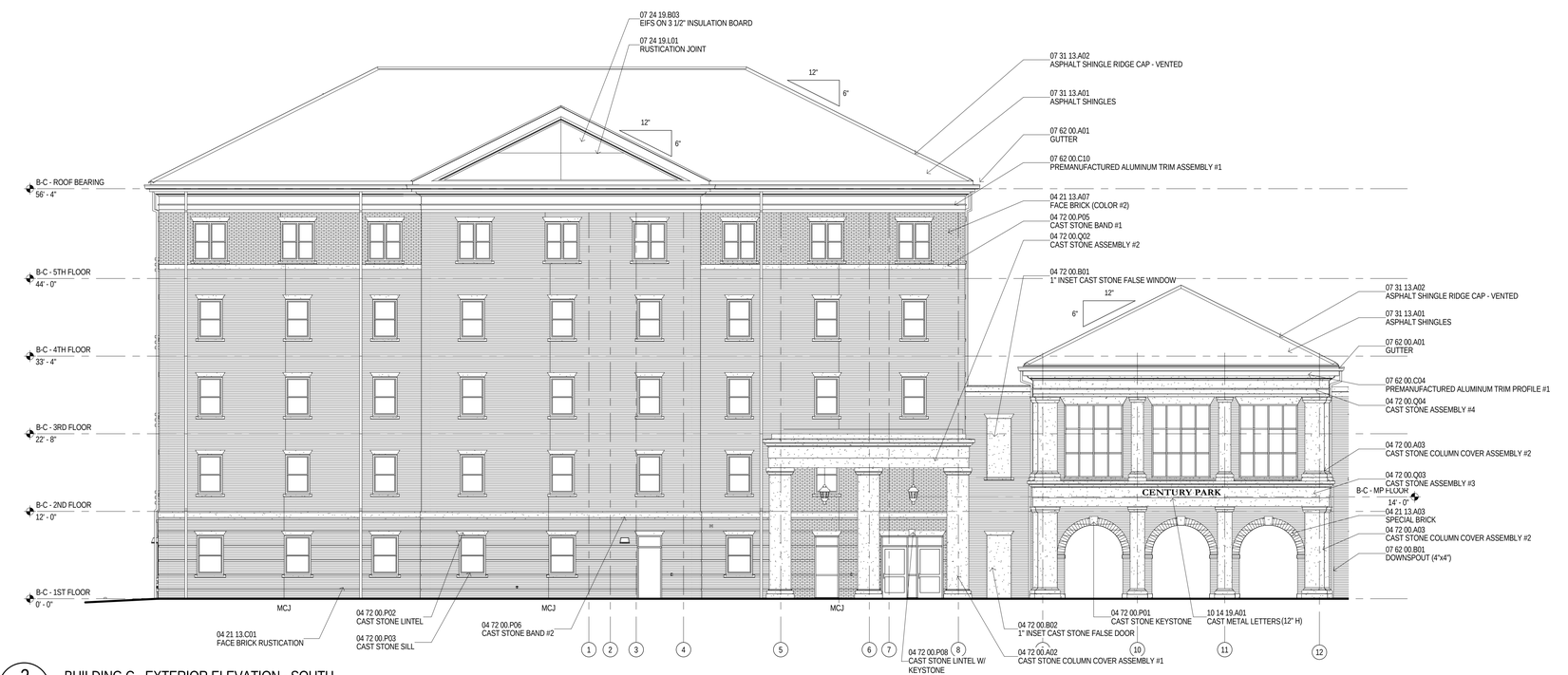

2
1/8" = 1'-0"
BUILDING C - EXTERIOR ELEVATION - SOUTH
A101B

MATERIAL KEYING

04 21 13.A01	FACE BRICK
04 21 13.A03	SPECIAL BRICK
04 21 13.A04	BRICK ARCH
04 21 13.A06	FACE BRICK (COLOR #1)
04 21 13.A07	FACE BRICK (COLOR #2)
04 21 13.A08	2" BRICK PILASTER
04 21 13.B03	1" INSET BRICK FALSE WINDOW
04 21 13.C01	FACE BRICK RUSTICATION
04 72 00.A02	CAST STONE COLUMN COVER ASSEMBLY #1
04 72 00.A03	CAST STONE COLUMN COVER ASSEMBLY #2
04 72 00.A04	CAST STONE COLUMN COVER ASSEMBLY #3
04 72 00.A05	CAST STONE COLUMN COVER ASSEMBLY #4
04 72 00.B01	1" INSET CAST STONE FALSE WINDOW
04 72 00.B02	1" INSET CAST STONE FALSE DOOR
04 72 00.P01	CAST STONE KEYSTONE
04 72 00.P02	CAST STONE LINTEL
04 72 00.P03	CAST STONE SILL
04 72 00.P05	CAST STONE BAND #1
04 72 00.P06	CAST STONE BAND #2
04 72 00.P07	CAST STONE BAND #3
04 72 00.P08	CAST STONE LINTEL W/ KEYSTONE
04 72 00.Q02	CAST STONE ASSEMBLY #2
04 72 00.Q03	CAST STONE ASSEMBLY #3
04 72 00.Q04	CAST STONE ASSEMBLY #4
07 24 19.B03	EIFS ON 3 1/2" INSULATION BOARD
07 24 19.L01	RUSTICATION JOINT
07 31 13.A01	ASPHALT SHINGLES
07 31 13.A02	ASPHALT SHINGLE RIDGE CAP - VENTED
07 62 00.A01	GUTTER
07 62 00.B01	DOWNSPOUT (4"x4")
07 62 00.C04	PREMANUFACTURED ALUMINUM TRIM PROFILE #1
07 62 00.C09	DECORATIVE ALUMINUM TRIM
07 62 00.C10	PREMANUFACTURED ALUMINUM TRIM ASSEMBLY #1
08 44 13.A01	CURTAIN WALL SYSTEM
08 44 13.B02	EXTENDED FRAMING COVER
10 14 19.A01	CAST METAL LETTERS

BRICK LEGEND

04 21 13.A06
FACE BRICK (COLOR #1)

04 21 13.A07
FACE BRICK (COLOR #2)

GENERAL NOTES

A "MCJ" INDICATED MASONRY CONTROL JOINT IN FACE BRICK, TYPICAL. MCJ'S ARE TO BE CONTINUOUS AROUND ENDS OF CAST STONE LINTELS, SILLS, BANDS, ETC. WHERE MCJ'S DO NOT ALIGN WITH BRICK SOLDIER COURSING, SHIFT JOINT - DO NOT CUT BRICK AT SOLDIER COURSE.

B "DS" INDICATED DOWNSPOUT PER SPECIFICATIONS. HOLD 1" OFF FACE OF BUILDING UNLESS OTHERWISE NOTED. SEE CIVIL STORM DRAINAGE PLANS FOR DOWNSPOUT STORM DRAINAGE TIE-INS BELOW GRADE. PROVIDE CAST IRON DOWNSPOUT BOOTS AT BASE OF BUILDING PER SPECIFICATIONS.

C SEE SHEET A500 SERIES DRAWINGS FOR COMPLETE DETAILS OF FACTORY-FORMED METAL TRIM PROFILES, GRFC PROFILES AND CAST STONE PROFILES.

D ALL DOWNSPOUTS ARE TO TIE INTO UNDERGROUND STORM SEWER VIA CAST IRON DOWNSPOUT BOOTS. SEE CIVIL FOR BOOT DETAIL AND STORM SEWER TIE-INS.

KEY PLAN

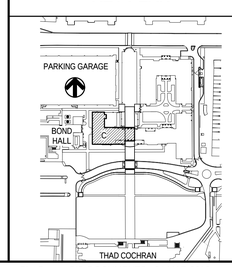

REGISTERED ARCHITECT
Thomas Paul Saunders
3487
Tupelo, MS
STATE OF MISSISSIPPI
04 MARCH 2013

REGISTERED ELECTRICAL ENGINEER
MICHAEL EVANS
4283
08 MAR 2013
STATE OF MISSISSIPPI

THE McCARTY COMPANY
DESIGN GROUP, P.A.
TELEPHONE: (662) 844-4400
FAX: (662) 844-0500
OFFICE ADDRESS: 533 WEST MAIN STREET TUPELO, MS 38804
MAILING ADDRESS: P.O. BOX 440 TUPELO, MS 38802

DESIGN ARCHITECT
Hanbury Evans Wright Vlattas + Company
120 Atlantic Street
Norfolk, VA 23510
757.321.9600
www.hewv.com

PROJECT TITLE
USM - CENTURY PARK SOUTH
IHL# 208-297
HATTIESBURG, MISSISSIPPI

THE UNIVERSITY OF SOUTHERN MISSISSIPPI

PROJECT NO: 2012020
DRAWN BY: MPS
CHECKED BY: JPH
DATE ISSUED: 04 MAR 2013

REVISIONS & ADDENDUMS

SHEET TITLE
BUILDING C - EXTERIOR ELEVATIONS

SHEET NUMBER
A201C

3/11/2013 7:41:43 AM

Plot Date: BID DOCUMENTS - 04 MAR 2013

1 BUILDING C - EXTERIOR ELEVATION - EAST

1/8" = 1'-0" A101C

0' 8' 16' 24'

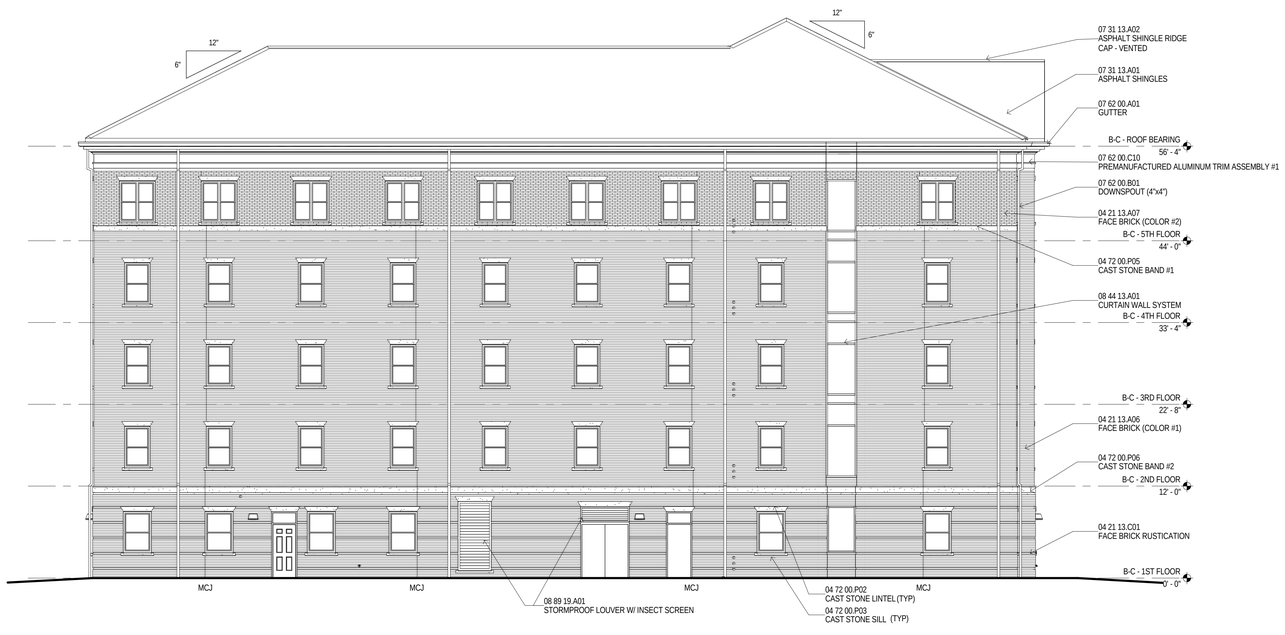

2 BUILDING C - EXTERIOR ELEVATION - WEST

1/8" = 1'-0" A101C

0' 8' 16' 24'

MATERIAL KEYING

04 21 13.A04	BRICK ARCH
04 21 13.A06	FACE BRICK (COLOR #1)
04 21 13.A07	FACE BRICK (COLOR #2)
04 21 13.C01	FACE BRICK RUSTICATION
04 72 00.A02	CAST STONE COLUMN COVER ASSEMBLY #1
04 72 00.A03	CAST STONE COLUMN COVER ASSEMBLY #2
04 72 00.P01	CAST STONE KEYSTONE
04 72 00.P02	CAST STONE LINTEL
04 72 00.P03	CAST STONE SILL
04 72 00.P05	CAST STONE BAND #1
04 72 00.P06	CAST STONE BAND #2
07 31 13.A01	ASPHALT SHINGLES
07 31 13.A02	ASPHALT SHINGLE RIDGE CAP - VENTED
07 62 00.A01	GUTTER
07 62 00.B01	DOWNSPOUT (4"x4")
07 62 00.C09	DECORATIVE ALUMINUM TRIM
07 62 00.C10	PREMANUFACTURED ALUMINUM TRIM ASSEMBLY #1
08 41 13.A01	ALUMINUM FRAMING SEE SCHEDULE
08 44 13.A01	CURTAIN WALL SYSTEM
08 44 13.B02	EXTENDED FRAMING COVER
08 89 19.A01	STORMPROOF LOUVER W/ INSECT SCREEN

BRICK LEGEND

04 21 13.A06
FACE BRICK (COLOR #1)

04 21 13.A07
FACE BRICK (COLOR #2)

GENERAL NOTES

A "MCJ" INDICATED MASONRY CONTROL JOINT IN FACE BRICK, TYPICAL. MCJ'S ARE TO BE CONTINUOUS AROUND ENDS OF CAST STONE LINTELS, SILLS, BANDS, ETC. WHERE MCJ'S DO NOT ALIGN WITH BRICK SOLDIER COURSING, SHIFT JOINT - DO NOT CUT BRICK AT SOLDIER COURSE.

B "DS" INDICATED DOWNSPOUT PER SPECIFICATIONS. HOLD 1" OFF FACE OF BUILDING UNLESS OTHERWISE NOTED. SEE CIVIL STORM DRAINAGE PLANS FOR DOWNSPOUT STORM DRAINAGE TIE-INS BELOW GRADE. PROVIDE CAST IRON DOWNSPOUT BOOTS AT BASE OF BUILDING PER SPECIFICATIONS.

C SEE SHEET A500 SERIES DRAWINGS FOR COMPLETE DETAILS OF FACTORY-FORMED METAL TRIM PROFILES, GRFC PROFILES AND CAST STONE PROFILES.

D ALL DOWNSPOUTS ARE TO TIE INTO UNDERGROUND STORM SEWER VIA CAST IRON DOWNSPOUT BOOTS. SEE CIVIL FOR BOOT DETAIL AND STORM SEWER TIE-INS.

KEY PLAN

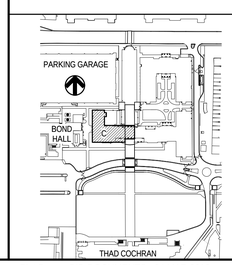

REGISTERED ARCHITECT
Thomas Paul McCarty
3482
Tupelo, MS
STATE OF MISSISSIPPI
04 march 2013

REGISTERED ELECTRICAL ENGINEER
MICHAEL EVANS
4283
04 MAR 2013
STATE OF MISSISSIPPI

THE McCARTY COMPANY
DESIGN GROUP, P.A.
OFFICE ADDRESS:
533 WEST MAIN STREET
TUPELO, MS 38804
TELEPHONE:
(662) 844-4400
FAX:
(662) 844-0500
MAILING ADDRESS:
P.O. BOX 440
TUPELO, MS 38802

DESIGN ARCHITECT
Hanbury Evans Wright Vlattas + Company
120 Atlantic Street
Norfolk, VA 23510
757.321.9600
www.hewv.com

PROJECT TITLE
USM - CENTURY PARK SOUTH
IHL# 208-297
HATTIESBURG, MISSISSIPPI

THE UNIVERSITY OF SOUTHERN MISSISSIPPI

PROJECT NO:
- 2012020

DRAWN BY:
- MPS

CHECKED BY:
- JPH

DATE ISSUED:
- 04 MAR 2013

REVISIONS & ADDENDUMS

SHEET TITLE
BUILDING C - EXTERIOR ELEVATIONS

SHEET NUMBER
A202C

3/11/2013 7:43:37 AM

Plot Date: BID DOCUMENTS - 04 MAR 2013

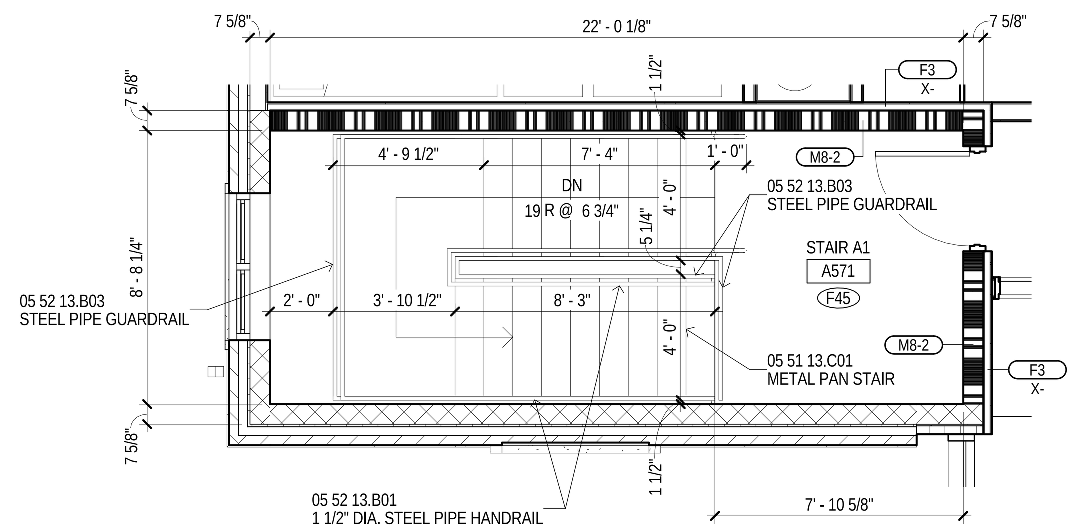

1 BUILDING A - STAIR A1 A571 - 5TH FLR
1/4" = 1'-0"
A105A

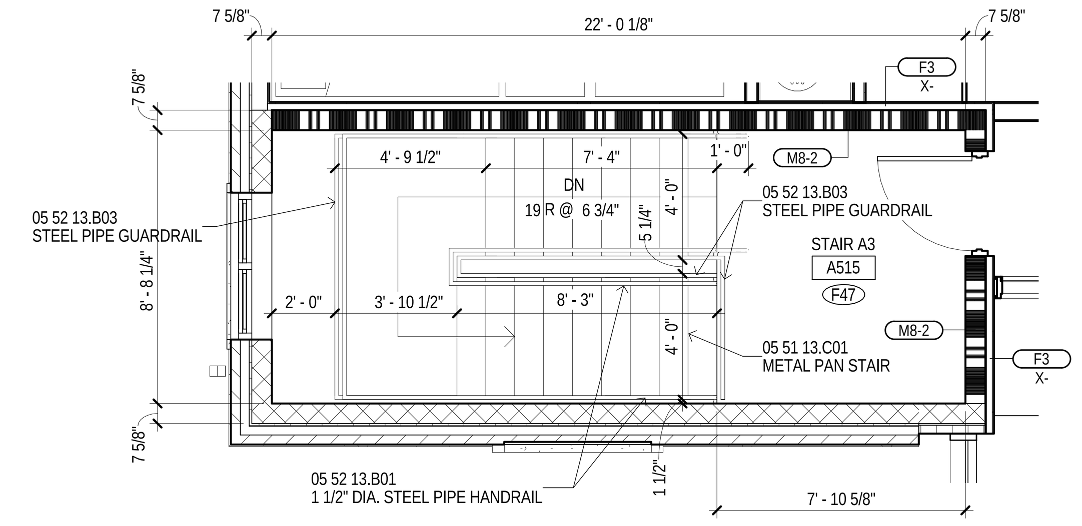

2 BUILDING A - STAIR A3 A515 - 5TH FLR
1/4" = 1'-0"
A105A

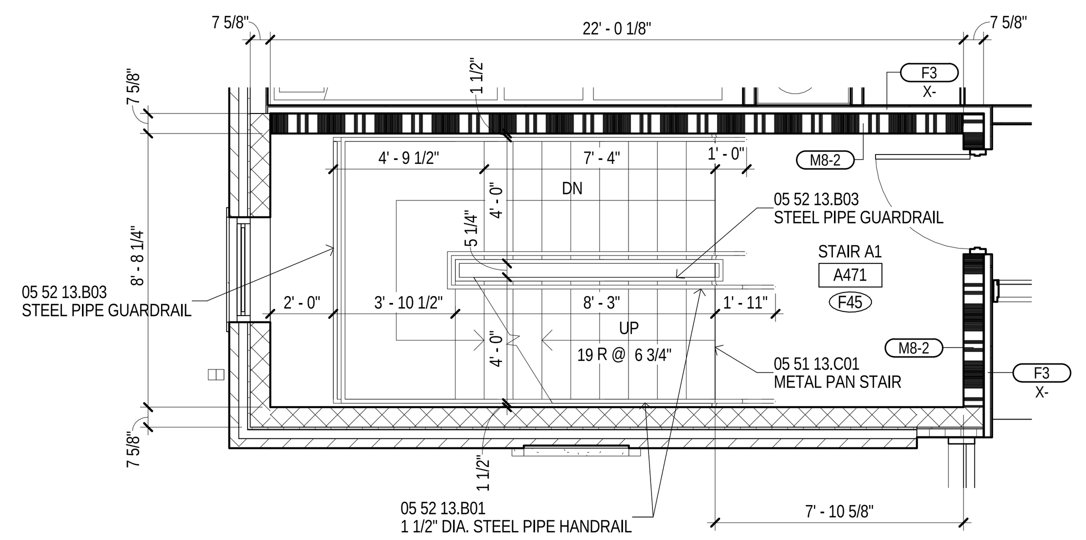

3 BUILDING A - STAIR A1 A471 - 4TH FLR
1/4" = 1'-0"

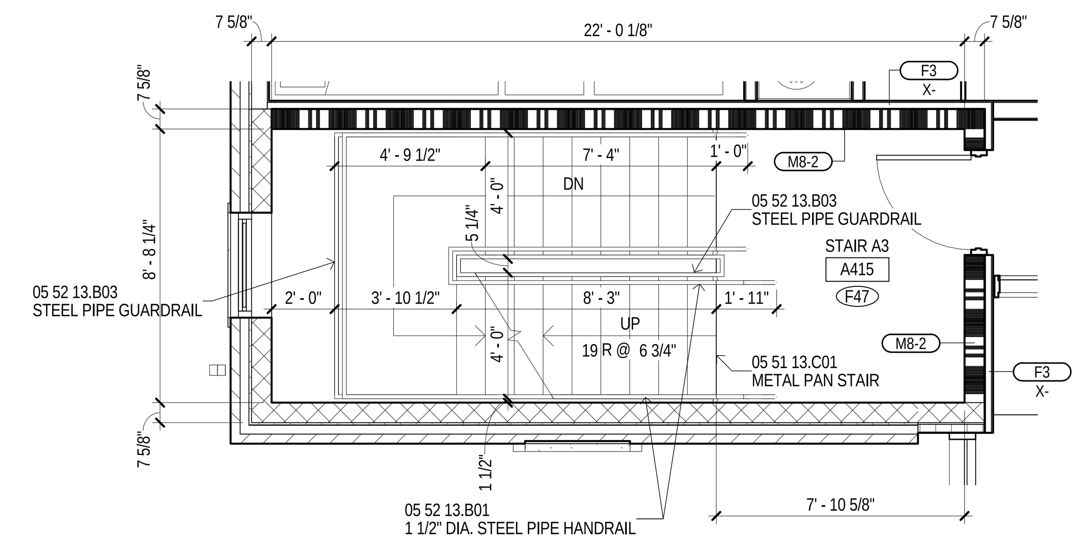

4 BUILDING A - STAIR A3 A415 - 4TH FLR
1/4" = 1'-0"

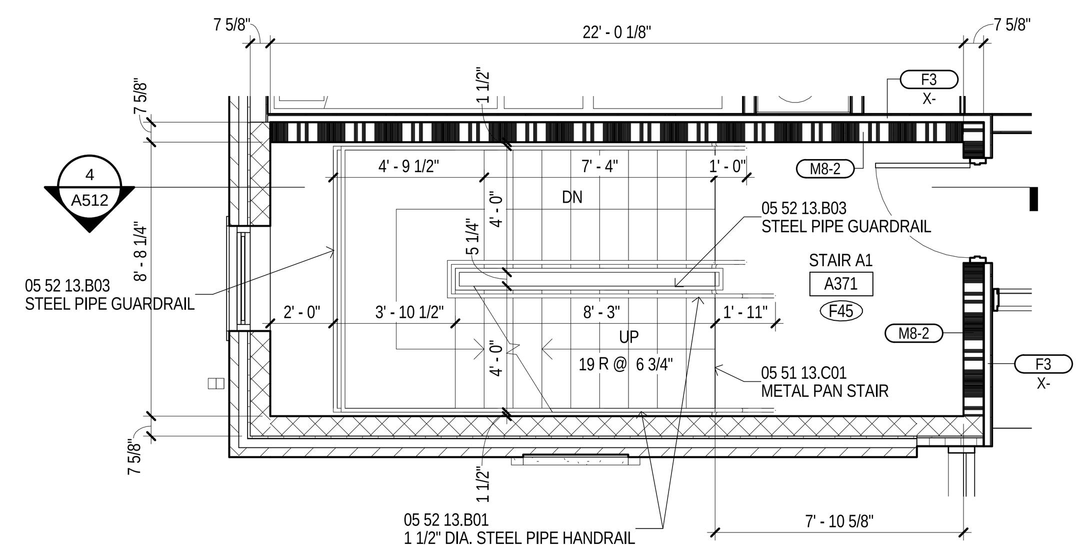

5 BUILDING A - STAIR A1 A371 - 3RD FLR
1/4" = 1'-0"
A103A

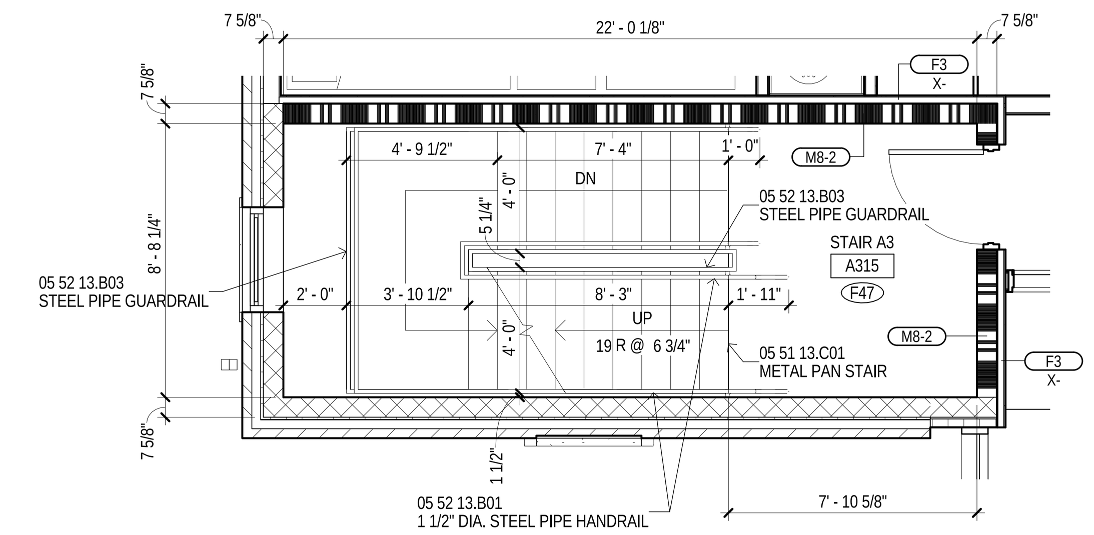

6 BUILDING A - STAIR A3 A315 - 3RD FLR
1/4" = 1'-0"
A103A

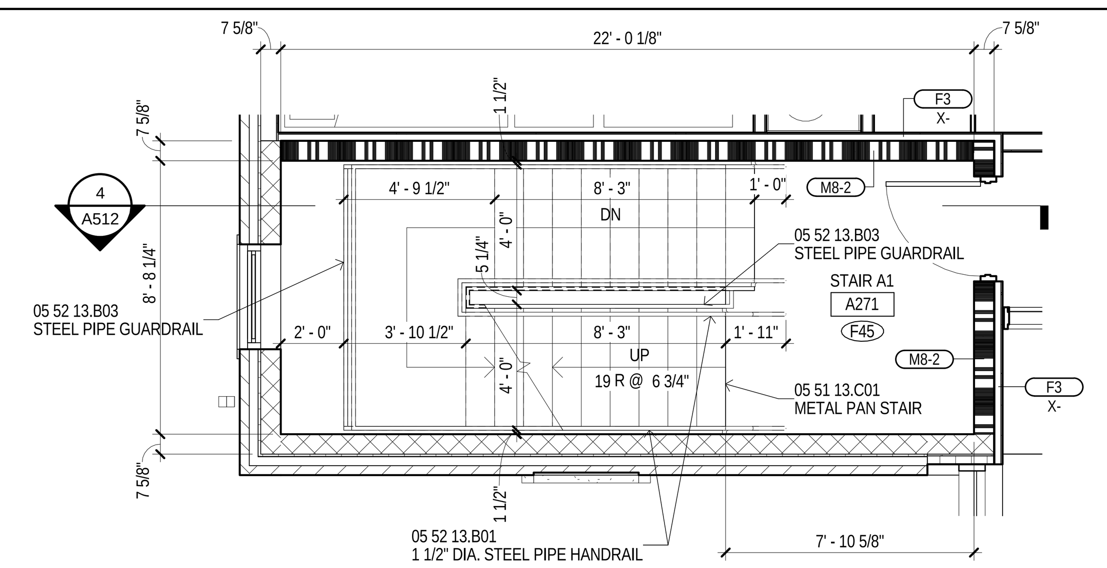

7 BUILDING A - STAIR A1 A271 - 2ND FLR
1/4" = 1'-0"
A102A

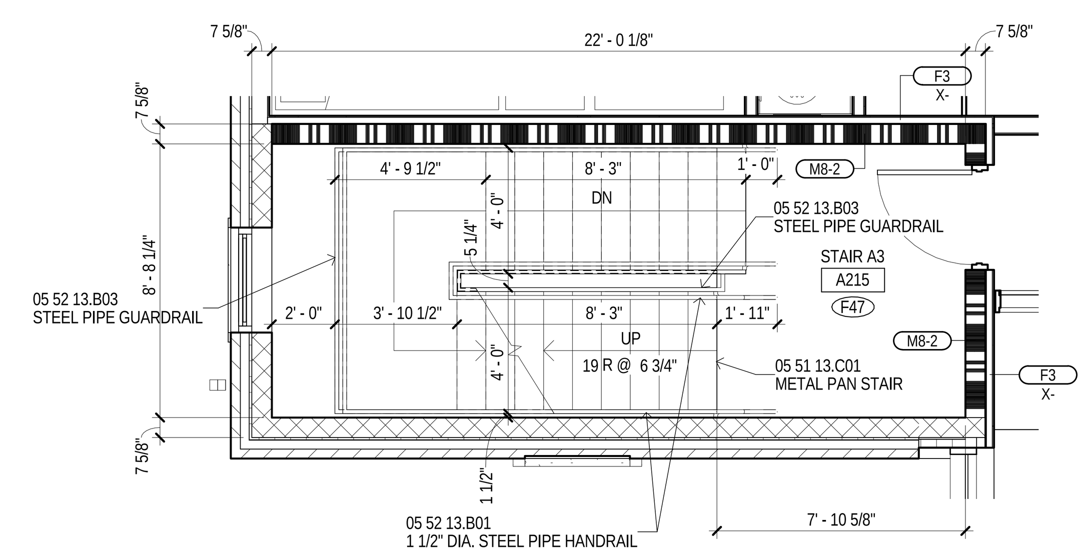

8 BUILDING A - STAIR A3 A215 - 2ND FLR
1/4" = 1'-0"
A102A

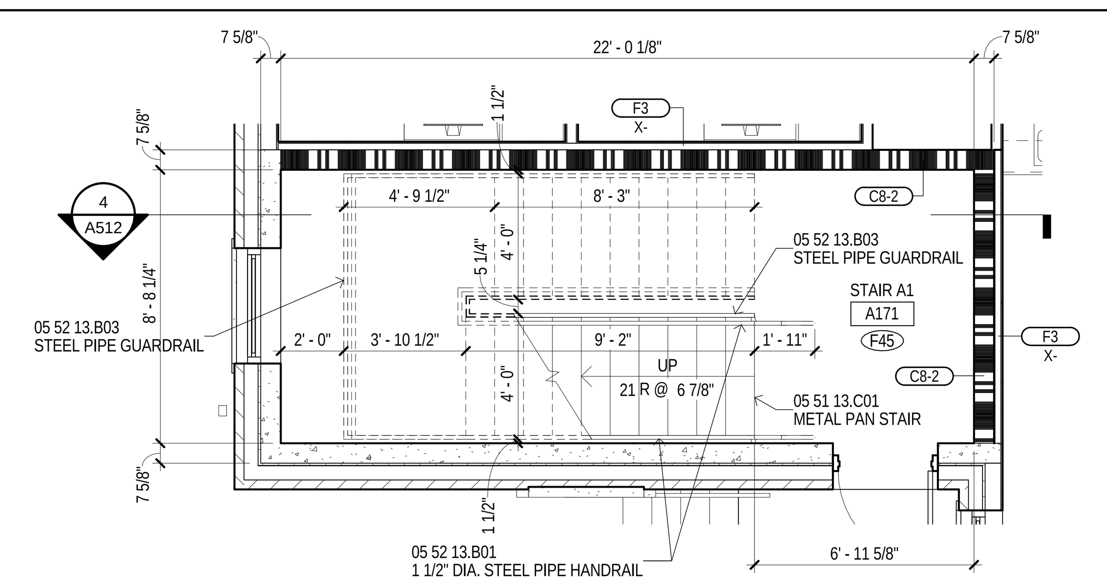

9 BUILDING A - STAIR A1 A171 - 1ST FLR
1/4" = 1'-0"
A101A

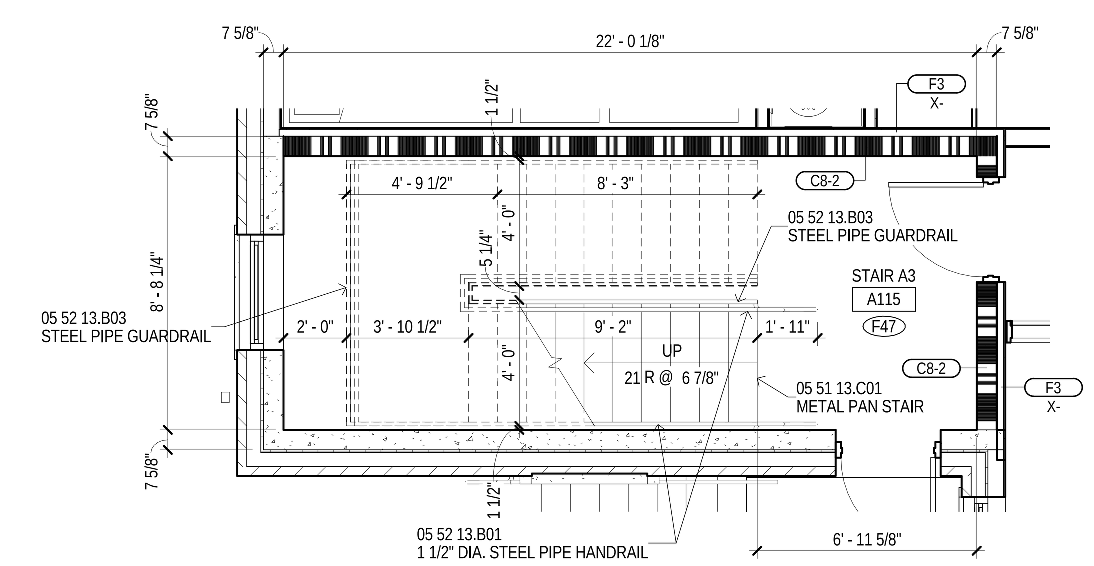

10 BUILDING A - STAIR A3 A115 - 1ST FLR
1/4" = 1'-0"
A101A

MATERIAL KEYING

05 51 13.C01	METAL PAN STAIR
05 52 13.B01	1 1/2" DIA. STEEL PIPE HANDRAIL
05 52 13.B03	STEEL PIPE GUARDRAIL

LEGEND

FEC	10 44 13.B01 SEMI-RECESSED FIRE EXT. CABINET
FEB	10 44 13.C01 FIRE EXT. BRACKET
DS	PREMANUFACTURED ALUMINUM DOWNSPOUT
EDF-1	ELECTRIC DRINKING FOUNTAIN. SEE PLUMBING.
EDF-2	ELECTRIC DRINKING FOUNTAIN. SEE PLUMBING.
EDF-3	ELECTRIC DRINKING FOUNTAIN WITH BOTTLE FILLER. SEE PLUMBING.
MBH-1	10 28 00.L01 MOP AND BROOM HOLDER (MBH-1)
CJ	CONTROL JOINT
EJ-#	07 95 00.### EXPANSION JOINT COVER (EJ-#)
E.P.	EMERGENCY PHONE SEE ELECTRICAL

GENERAL NOTES

A UNLESS SPECIFICALLY NOTED OTHERWISE - INTERIOR DIMENSIONS ARE TO FACE OF STUD, FACE OF CMU OR FACE OF CONCRETE WHERE INDICATED. WHERE FACE OF FINISH OR CLEAR DIMENSIONS ARE INDICATED FOR COORDINATION PURPOSES OR TO DESIGNATE REQUIRED CODE CLEARANCES, THE DIMENSION IS TYPICALLY DESIGNATED AS "FOF" (FACE OF FINISH) OR "CLEAR".

B CONTRACTOR RESPONSIBLE FOR FIELD MEASUREMENTS ON OVERALL DIMENSIONS.

C ROUGH-IN AND CLEARANCE DIMENSIONS, BLOCKING AND ANCHORAGE FOR SHOWER UNITS, (AS WELL AS LAUNDRY EQUIPMENT, APPLIANCES, AND SIMILAR BUILT-IN OR DIMENSIONALLY CRITICAL ITEMS) IS TO BE PROVIDED PER THE MANUFACTURER'S WRITTEN INSTALLATION INSTRUCTIONS.

D DIMENSIONS INDICATED AT SHOWER FIXTURES ARE APPROXIMATE. PRIOR TO BEGINNING PARTITION LAYOUT WORK OBTAIN ACTUAL SAMPLES OF EACH PREFABRICATED SHOWER ENCLOSURE AND CONSTRUCT MOCK-UPS OF EACH TYPICAL CONDITION TO ESTABLISH EXACT ROUGH-IN DIMENSIONS AND FRAMING, BLOCKING AND FINISH DETAILS.

E SHOWER UNITS SHALL BE GROUTED SOLID UNDERNEATH - FILL VOID BETWEEN FLOOR SLAB AND FLOOR OF SHOWER.

F DWELLING UNITS DESIGNATED AS "HC" ON THE PLANS ARE UNITS WITH MOBILITY FEATURES IN ACCORDANCE WITH APPLICABLE ACCESSIBILITY CODES. ROOMS NOTED "HC-R" ARE PROVIDED WITH ROLL-IN TYPE SHOWER ENCLOSURESS. ROOMS NOTED AS "HC-T" ARE PROVIDED WITH TRANSFER TYPE SHOWER ENCLOSURES. UNITS DESIGNATED WITH "C" ARE UNITS TO BE PROVIDED WITH COMMUNICATIONS FEATURES.

G ALL DWELLING UNITS NOT DESIGNATED AS "HC" ARE TO BE CONSTRUCTED AS "TYPE B" UNITS PER CHAPTER 11 OF ICC AND APPLICABLE PROVISIONS OF ICC/ANSI A117.1 AND THE FAIR HOUSING ACT DESIGN MANUAL.

H EXCEPT AS NOTED OTHERWISE, LAUNDRY EQUIPMENT AND RESIDENTIAL APPLIANCES ARE NOT IN CONTRACT (NIC) - LAUNDRY EQUIPMENT WILL BE FURNISHED AND INSTALLED BY THE OWNER'S SEPARATE LAUNDRY CONTRACTOR (WITH THE EXCEPTION OF STAFF APARTMENT LAUNDRY EQUIPMENT). RESIDENTIAL KITCHEN EQUIPMENT (WITH THE EXCEPTION OF WALL OVENS AND RANGE HOODS) WILL BE OWNER FURNISHED AND CONTRACTOR INSTALLED. PROVIDE ROUGH-IN FOR LAUNDRY EQUIPMENT AND RESIDENTIAL KITCHEN APPLIANCES. REFER TO ELECTRICAL DRAWINGS FOR POWER AND DATA - REFER TO PLUMBING DRAWINGS FOR GAS, WATER AND DRAINAGE - REFER TO MECHANICAL DRAWING FOR EXHAUSTING AS APPLICABLE. COORDINATE ROUGH-IN REQUIREMENTS WITH THE OWNER AND OBTAIN MANUFACTURER'S REQUIREMENTS PRIOR TO COMMENCEMENT OF ROUGH-IN WORK.

I LOCATE WHEELCHAIR ACCESSIBLE WATER CLOSETS 17" FROM CENTERLINE OF WATER CLOSET TO FACE OF FINISH AT ADJACENT WALL, TYPICAL. FLUSH HANDLES TO BE LOCATED ON THE WIDE (OPEN) SIDE OF THE FIXTURE, TYPICAL.

J PROVIDE FLOOR DRAINS (FD) AT ROLL-IN (R) AND TRANSFER (T) SHOWERS. REFER TO PLUMBING DRAWINGS, SLOPE FLOORS TO DRAIN.

K WHERE NOTED AT HANDICAP ACCESSIBLE DWELLING UNITS, PROVIDE REMOVABLE BASE CABINETS AT KITCHEN AND BATHROOM SINKS COMPLYING WITH THE REQUIREMENTS OF ADA STANDARDS FOR ACCESSIBLE DESIGN (SECTION 606.2 EXCEPTION NO. 3).

L CONTRACTOR TO PROVIDE 12 GAGE METAL BLOCKING IN STUD WALLS FOR ANCHORAGE OF WALL MOUNTED ITEMS INCLUDING BUT NOT LIMITED TO TOILET ACCESSORIES, WALL CABINETS, WALL MOUNTED TV'S, SHELVING, TOILET PARTITIONS, OWNER FURNISHED EQUIPMENT INDICATED AND SIMILAR ITEMS. FOR "TYPE B" DWELLING UNITS, PROVIDE METAL BLOCKING IN WALLS FOR FUTURE INSTALLATIONS AS INDICATED. FOR WALL MOUNTED TV'S IN LOUNGES, PROVIDE METAL BLOCKING 24" ABOVE AND BELOW ELECTRICAL JUNCTION BOXES.

M REFER TO A026 FOR DESCRIPTION OF ALL PARTITION TYPES.

N REFER TO A100 (1/8" FLOOR PLANS) SERIES DRAWINGS AND A300 SERIES DRAWINGS (ENLARGED PLANS) FOR PARTITION TYPE LOCATIONS.

O REFER TO LS SERIES DRAWING (LIFE SAFETY PLANS) FOR LOCATIONS OF FIRE RATED WALLS AND PARTITIONS.

P REFER TO A000 SERIES DRAWINGS FOR WINDOW TYPES AND DOOR TYPES, SCHEDULES AND DETAILS.

Q REFER TO A000 SERIES DRAWINGS FOR INTERIOR FINISH SCHEDULES.

R REFER TO A100 SERIES DRAWINGS (ENLARGED PLANS) FOR ADDITIONAL PLAN NOTES.

S REFER TO PROJECT MANUAL SECTION 10 28 00 FOR TOILET ACCESSORY SCHEDULE.

KEY PLAN

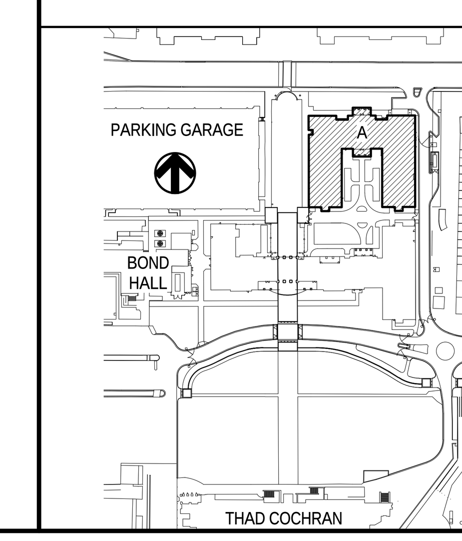

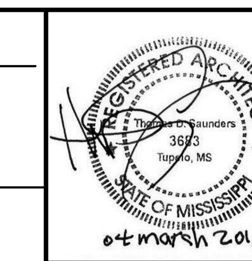

THE McCARTY COMPANY
DESIGN GROUP, P.A.
OFFICE ADDRESS: 533 WEST MAIN STREET TUPELO, MS 38804
MAILING ADDRESS: P.O. BOX 440 TUPELO, MS 38802
TELEPHONE: (662) 844-4400
FAX: (662) 844-0500

DESIGN ARCHITECT
Hanbury Evans Wright Vlattas + Company
120 Atlantic Street
Norfolk, VA 23510
757.321.9600
www.hewv.com

PROJECT TITLE
USM - CENTURY PARK SOUTH
IHL# 208-297
HATTIESBURG, MISSISSIPPI

THE UNIVERSITY OF SOUTHERN MISSISSIPPI

PROJECT NO:
- 2012020

DRAWN BY:
- BKS

CHECKED BY:
- JPH

DATE ISSUED:
- 04 MAR 2013

REVISIONS & ADDENDUMS

SHEET TITLE
ENLARGED PLANS AND SECTIONS - STAIRS AND ELEVATORS

SHEET NUMBER
A301

Plot Date: BID DOCUMENTS - 04 MARCH 2013
3/11/2013 4:49:17 AM

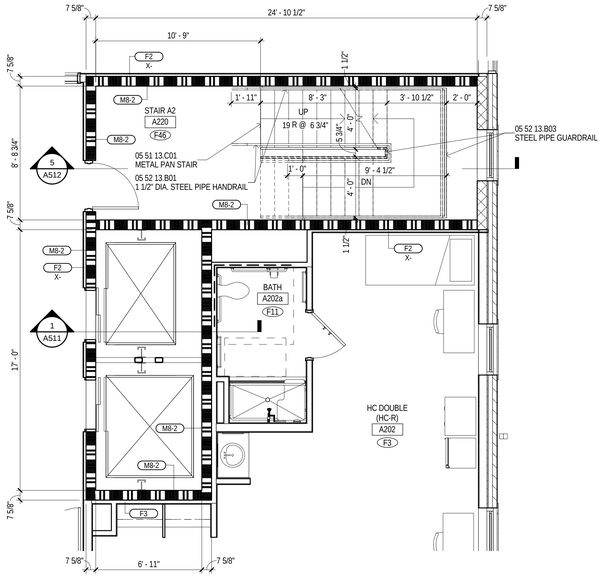

1 BUILDING A - STAIR A2 A220 - 2ND FLR
1/4" = 1'-0"
A102A

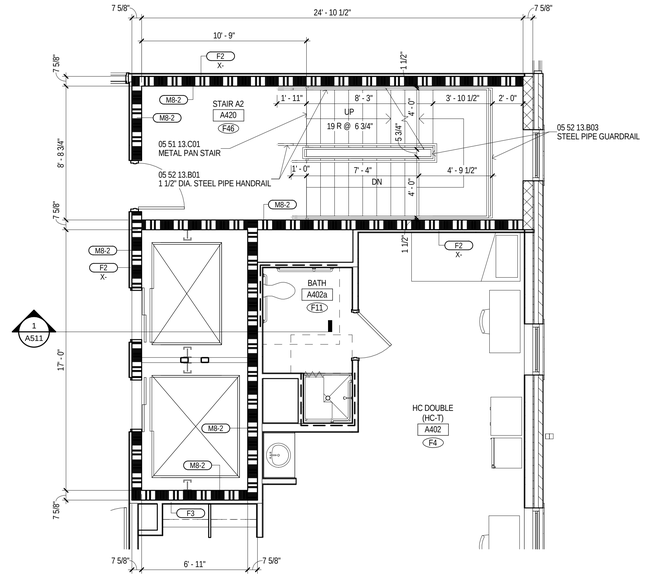

2 BUILDING A - STAIR A2 A420 - 4TH FLR
1/4" = 1'-0"

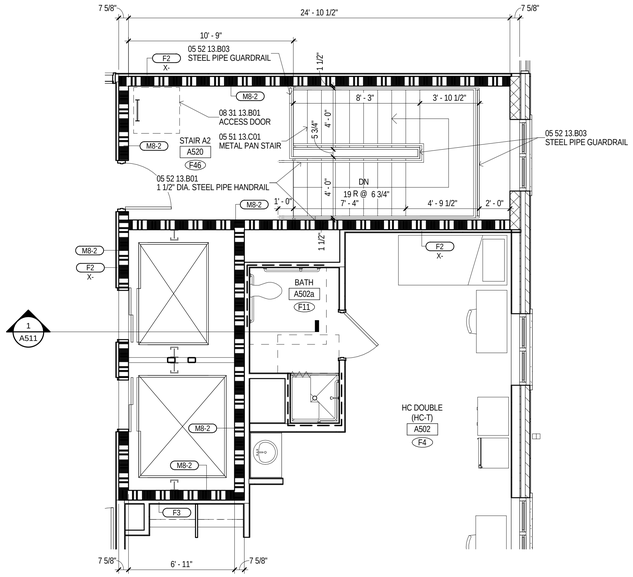

3 BUILDING A - STAIR A2 A520 - 5TH FLR
1/4" = 1'-0"
A105A

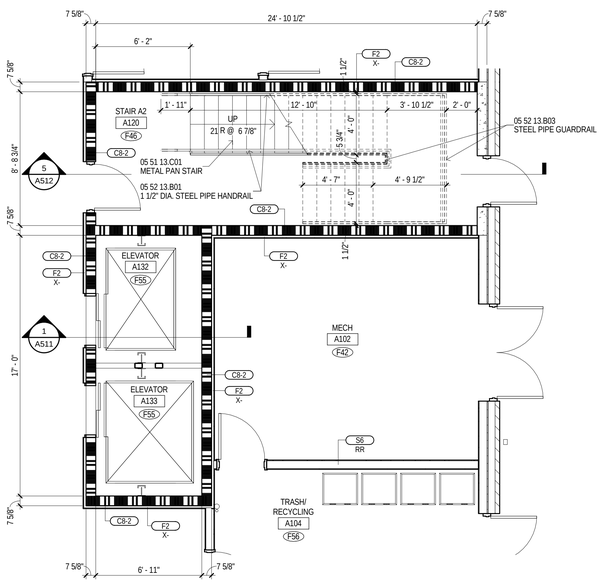

4 BUILDNG A - STAIR A2 A120 - 1ST FLR
1/4" = 1'-0"
A101A

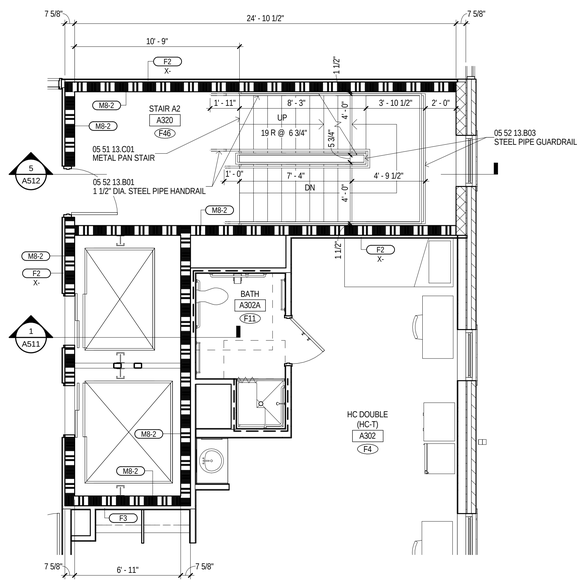

5 BUILDING A - STAIR A2 A320 - 3RD FLR
1/4" = 1'-0"
A103A

MATERIAL KEYING

05 51 13.C01	METAL PAN STAIR
05 52 13.B01	1 1/2" DIA. STEEL PIPE HANDRAIL
05 52 13.B03	STEEL PIPE GUARDRAIL
08 31 13.B01	ACCESS DOOR

LEGEND

FEC	10 44 13.B01 SEMI-RECESSED FIRE EXT. CABINET
FEB	10 44 13.C01 FIRE EXT. BRACKET
DS	PREMANUFACTURED ALUMINUM DOWNSPOUT
EDF-1	ELECTRIC DRINKING FOUNTAIN. SEE PLUMBING.
EDF-2	ELECTRIC DRINKING FOUNTAIN. SEE PLUMBING.
EDF-3	ELECTRIC DRINKING FOUNTAIN WITH BOTTLE FILLER. SEE PLUMBING.
MBH-1	10 28 00.L01 MOP AND BROOM HOLDER (MBH-1)
CJ	CONTROL JOINT
EJ-#	07 95 00.### EXPANSION JOINT COVER (EJ-#)
E.P.	EMERGENCY PHONE SEE ELECTRICAL

GENERAL NOTES

A UNLESS SPECIFICALLY NOTED OTHERWISE - INTERIOR DIMENSIONS ARE TO FACE OF STUD, FACE OF CMU OR FACE OF CONCRETE WHERE INDICATED. WHERE FACE OF FINISH OR CLEAR DIMENSIONS ARE INDICATED FOR COORDINATION PURPOSES OR TO DESIGNATE REQUIRED CODE CLEARANCES, THE DIMENSION IS TYPICALLY DESIGNATED AS "FOF" (FACE OF FINISH) OR "CLEAR".

B CONTRACTOR RESPONSIBLE FOR FIELD MEASUREMENTS ON OVERALL DIMENSIONS.

C ROUGH-IN AND CLEARANCE DIMENSIONS, BLOCKING AND ANCHORAGE FOR SHOWER UNITS, (AS WELL AS LAUNDRY EQUIPMENT, APPLIANCES, AND SIMILAR BUILT-IN OR DIMENSIONALLY CRITICAL ITEMS) IS TO BE PROVIDED PER THE MANUFACTURER'S WRITTEN INSTALLATION INSTRUCTIONS.

D DIMENSIONS INDICATED AT SHOWER FIXTURES ARE APPROXIMATE. PRIOR TO BEGINNING PARTITION LAYOUT WORK OBTAIN ACTUAL SAMPLES OF EACH PREFABRICATED SHOWER ENCLOSURE AND CONSTRUCT MOCK-UPS OF EACH TYPICAL CONDITION TO ESTABLISH EXACT ROUGH-IN DIMENSIONS AND FRAMING, BLOCKING AND FINISH DETAILS.

E SHOWER UNITS SHALL BE GROUTED SOLID UNDERNEATH - FILL VOID BETWEEN FLOOR SLAB AND FLOOR OF SHOWER.

F DWELLING UNITS DESIGNATED AS "HC" ON THE PLANS ARE UNITS WITH MOBILITY FEATURES IN ACCORDANCE WITH APPLICABLE ACCESSIBILITY CODES. ROOMS NOTED "HC-R" ARE PROVIDED WITH ROLL-IN TYPE SHOWER ENCLOSURESS. ROOMS NOTED AS "HC-T" ARE PROVIDED WITH TRANSFER TYPE SHOWER ENCLOSURES. UNITS DESIGNATED WITH "C" ARE UNITS TO BE PROVIDED WITH COMMUNICATIONS FEATURES.

G ALL DWELLING UNITS NOT DESIGNATED AS "HC" ARE TO BE CONSTRUCTED AS "TYPE B" UNITS PER CHAPTER 11 OF ICC AND APPLICABLE PROVISIONS OF ICC/ANSI A117.1 AND THE FAIR HOUSING ACT DESIGN MANUAL.

H EXCEPT AS NOTED OTHERWISE, LAUNDRY EQUIPMENT AND RESIDENTIAL APPLIANCES ARE NOT IN CONTRACT (NIC) - LAUNDRY EQUIPMENT WILL BE FURNISHED AND INSTALLED BY THE OWNER'S SEPARATE LAUNDRY CONTRACTOR (WITH THE EXCEPTION OF STAFF APARTMENT LAUNDRY EQUIPMENT). RESIDENTIAL KITCHEN EQUIPMENT (WITH THE EXCEPTION OF WALL OVENS AND RANGE HOODS) WILL BE OWNER FURNISHED AND CONTRACTOR INSTALLED. PROVIDE ROUGH-IN FOR LAUNDRY EQUIPMENT AND RESIDENTIAL KITCHEN APPLIANCES. REFER TO ELECTRICAL DRAWINGS FOR POWER AND DATA - REFER TO PLUMBING DRAWINGS FOR GAS, WATER AND DRAINAGE - REFER TO MECHANICAL DRAWING FOR EXHAUSTING AS APPLICABLE. COORDINATE ROUGH-IN REQUIREMENTS WITH THE OWNER AND OBTAIN MANUFACTURER'S REQUIREMENTS PRIOR TO COMMENCEMENT OF ROUGH-IN WORK.

I LOCATE WHEELCHAIR ACCESSIBLE WATER CLOSETS 17" FROM CENTERLINE OF WATER CLOSET TO FACE OF FINISH AT ADJACENT WALL, TYPICAL. FLUSH HANDLES TO BE LOCATED ON THE WIDE (OPEN) SIDE OF THE FIXTURE, TYPICAL.

J PROVIDE FLOOR DRAINS (FD) AT ROLL-IN (R) AND TRANSFER (T) SHOWERS. REFER TO PLUMBING DRAWINGS. SLOPE FLOORS TO DRAIN.

K WHERE NOTED AT HANDICAP ACCESSIBLE DWELLING UNITS, PROVIDE REMOVABLE BASE CABINETS AT KITCHEN AND BATHROOM SINKS COMPLYING WITH THE REQUIREMENTS OF ADA STANDARDS FOR ACCESSIBLE DESIGN (SECTION 606.2 EXCEPTION NO. 3).

L CONTRACTOR TO PROVIDE 12 GAGE METAL BLOCKING IN STUD WALLS FOR ANCHORAGE OF WALL MOUNTED ITEMS INCLUDING BUT NOT LIMITED TO TOILET ACCESSORIES, WALL CABINETS, WALL MOUNTED TV'S, SHELVING, TOILET PARTITIONS, OWNER FURNISHED EQUIPMENT INDICATED AND SIMILAR ITEMS. FOR "TYPE B" DWELLING UNITS, PROVIDE METAL BLOCKING IN WALLS FOR FUTURE INSTALLATIONS AS INDICATED. FOR WALL MOUNTED TV'S IN LOUNGES, PROVIDE METAL BLOCKING 24" ABOVE AND BELOW ELECTRICAL JUNCTION BOXES.

M REFER TO A026 FOR DESCRIPTION OF ALL PARTITION TYPES.

N REFER TO A100 (1/8" FLOOR PLANS) SERIES DRAWINGS AND A300 SERIES DRAWINGS (ENLARGED PLANS) FOR PARTITION TYPE LOCATIONS.

O REFER TO LS SERIES DRAWING (LIFE SAFETY PLANS) FOR LOCATIONS OF FIRE RATED WALLS AND PARTITIONS.

P REFER TO A000 SERIES DRAWINGS FOR WINDOW TYPES AND DOOR TYPES, SCHEDULES AND DETAILS.

Q REFER TO A000 SERIES DRAWINGS FOR INTERIOR FINISH SCHEDULES.

R REFER TO A100 SERIES DRAWINGS (ENLARGED PLANS) FOR ADDITIONAL PLAN NOTES.

S REFER TO PROJECT MANUAL SECTION 10 28 00 FOR TOILET ACCESSORY SCHEDULE.

KEY PLAN

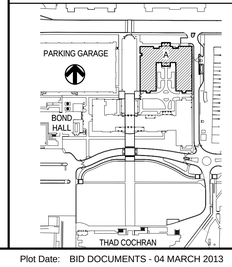

REGISTERED ARCHITECT
Thomas Alexander Saunders
3449
Tupelo, MS
STATE OF MISSISSIPPI
04 March 2013

THE McCARTY COMPANY
DESIGN GROUP, P.A.
TELEPHONE: (662) 844-4400
FAX: (662) 844-0520
OFFICE ADDRESS: 533 WEST MAIN STREET TUPELO, MS 38804
MAILING ADDRESS: P.O. BOX 440 TUPELO, MS 38802

DESIGN ARCHITECT
Hanbury Evans Wright Vlattas + Company
120 Atlantic Street
Norfolk, VA 23510
757.321.9600
www.hewv.com

PROJECT TITLE
USM - CENTURY PARK SOUTH
IHL# 208-297
HATTIESBURG, MISSISSIPPI
THE UNIVERSITY OF SOUTHERN MISSISSIPPI

PROJECT NO: 2012020
DRAWN BY: BKS
CHECKED BY: JPH
DATE ISSUED: 04 MAR 2013

REVISIONS & ADDENDUMS

SHEET TITLE
ENLARGED PLANS AND SECTIONS - STAIRS AND ELEVATORS

SHEET NUMBER
A302

3/11/2013 4:49:54 AM

Plot Date: BID DOCUMENTS - 04 MARCH 2013

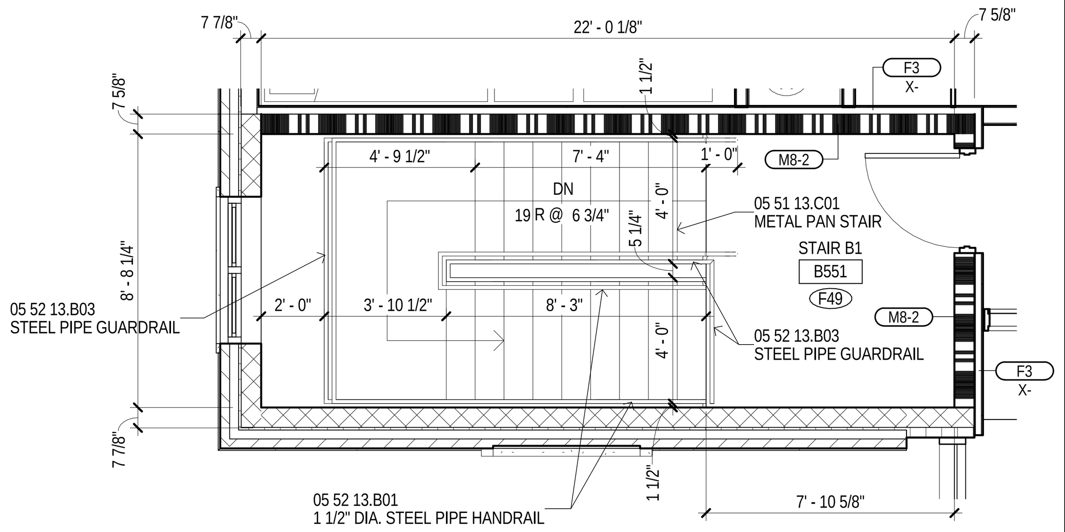

1 BUILDING B - STAIR B1 B551 - 5TH FLR
1/4" = 1'-0" A105B

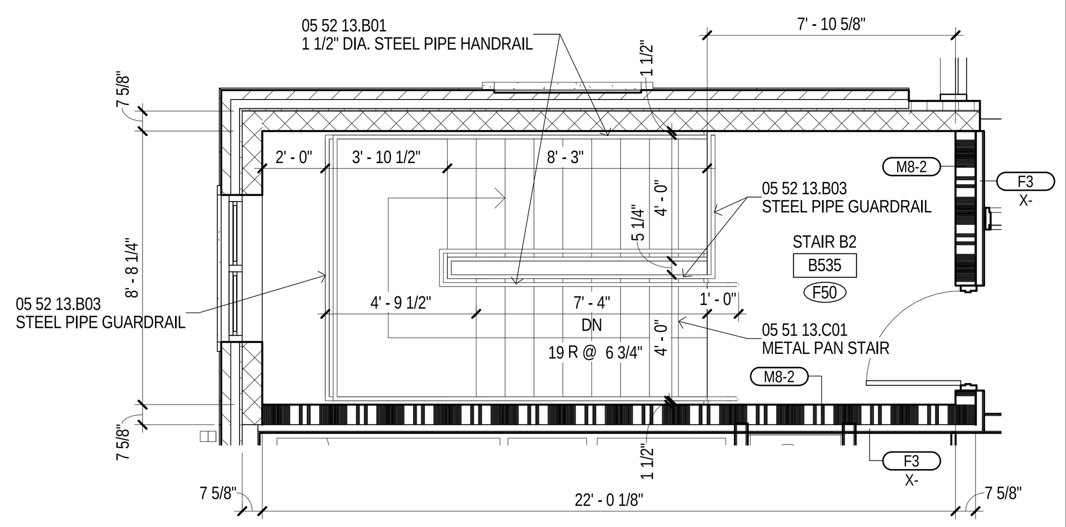

2 BUILDING B - STAIR B2 B535 - 5TH FLR
1/4" = 1'-0" A105B

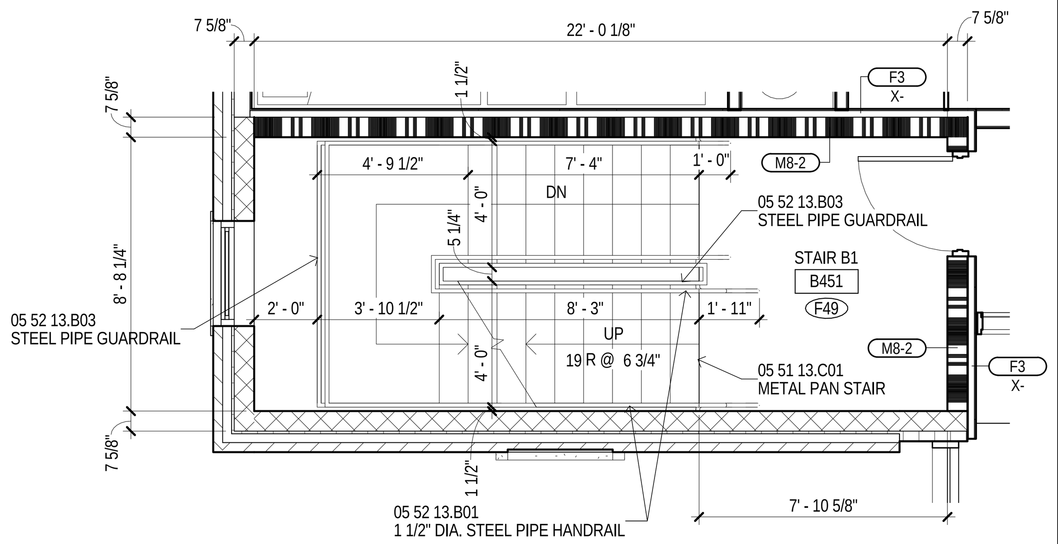

3 BUILDING B - STAIR B1 B541 - 4TH FLR
1/4" = 1'-0"

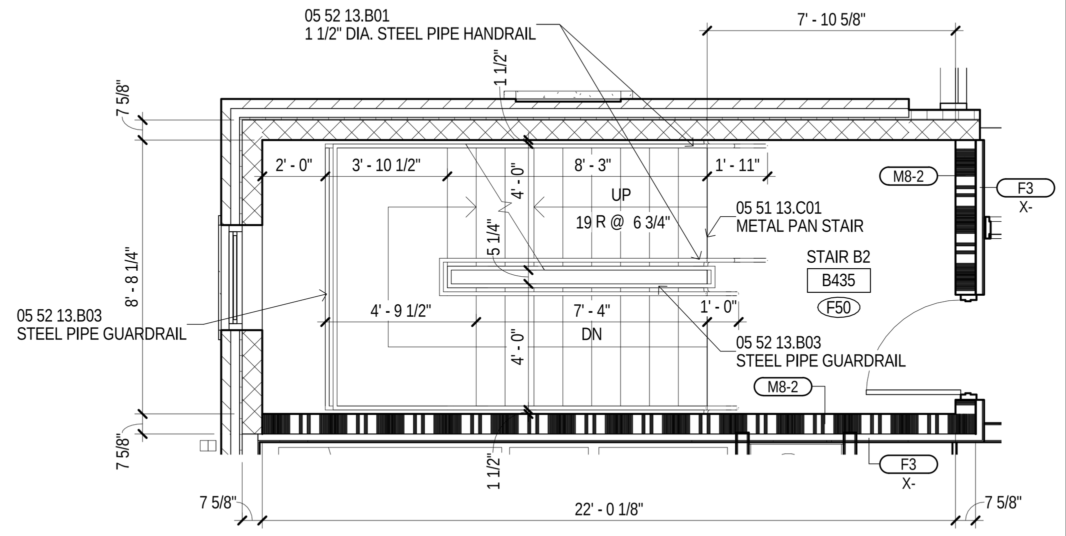

4 BUILDING B - STAIR B2 B435 - 4TH FLR
1/4" = 1'-0"

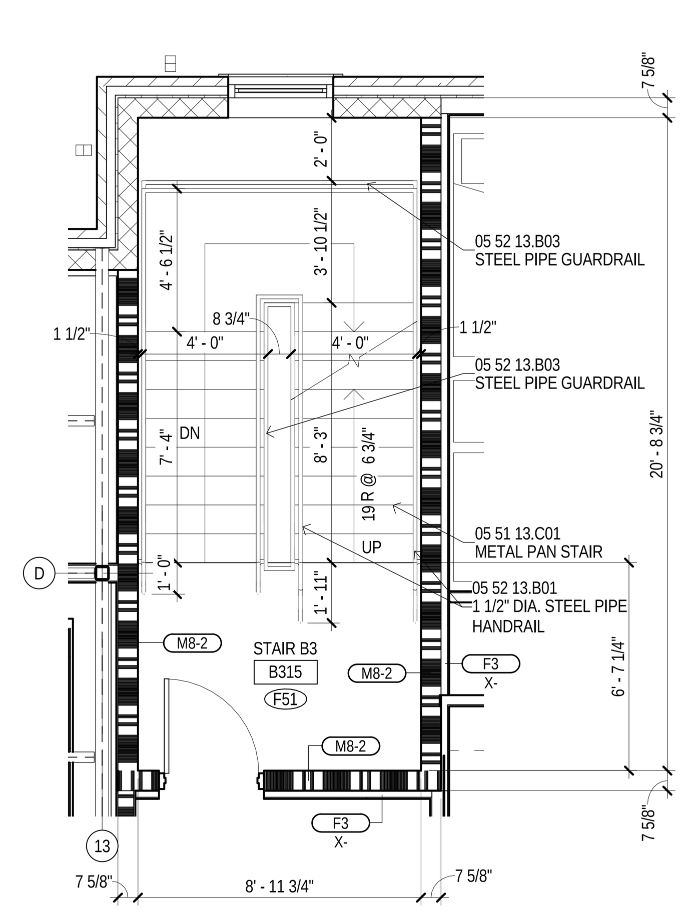

5 BUILDING B - STAIR B3 B315 - 3RD FLR
1/4" = 1'-0" A103B

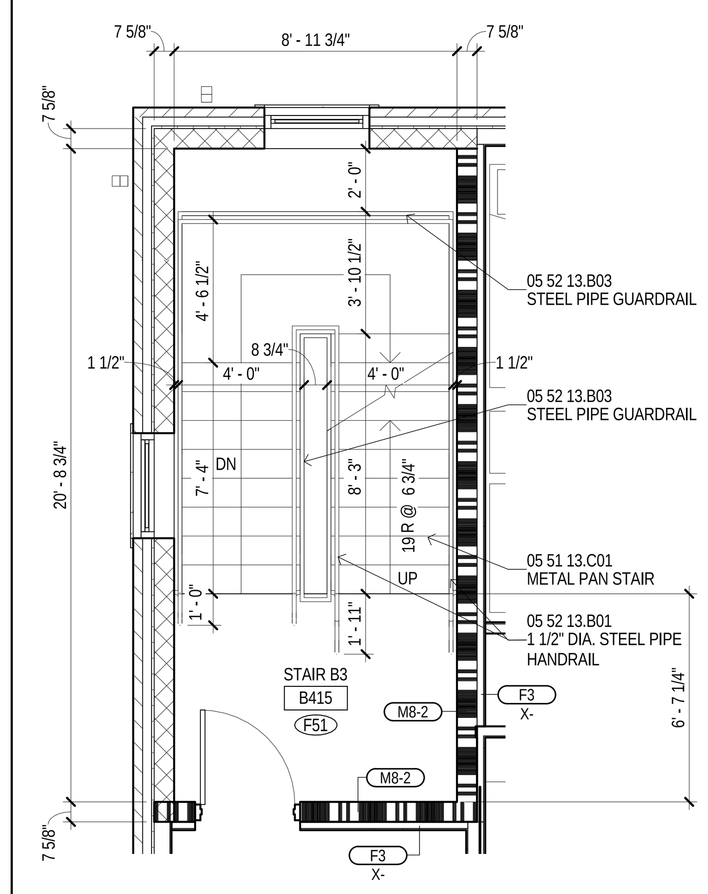

6 BUILDING B - STAIR B3 B415 - 4TH FLR
1/4" = 1'-0"

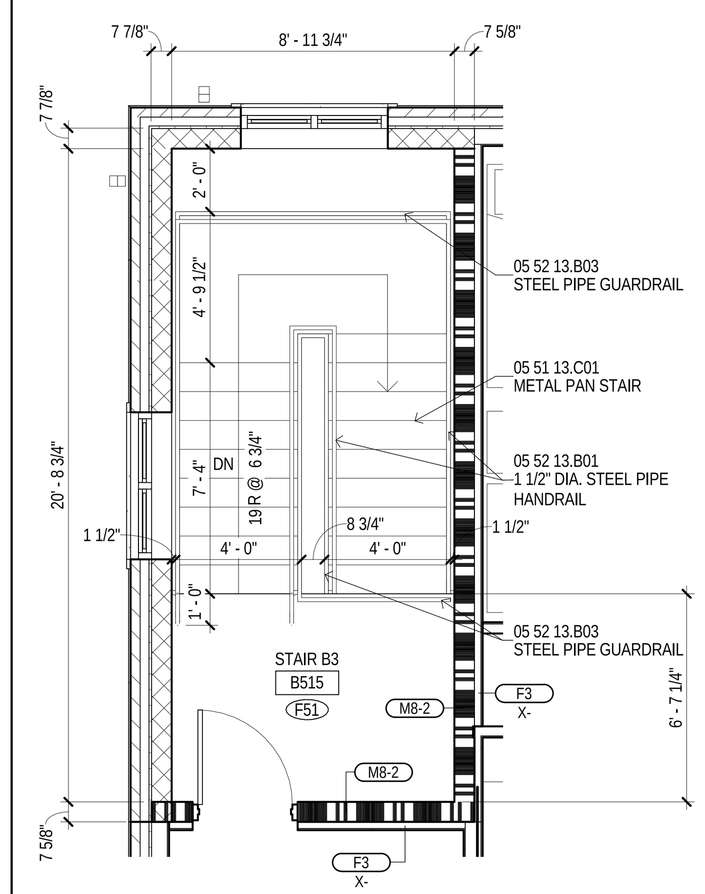

7 BUILDING B - STAIR B3 B515 - 5TH FLR
1/4" = 1'-0" A105B

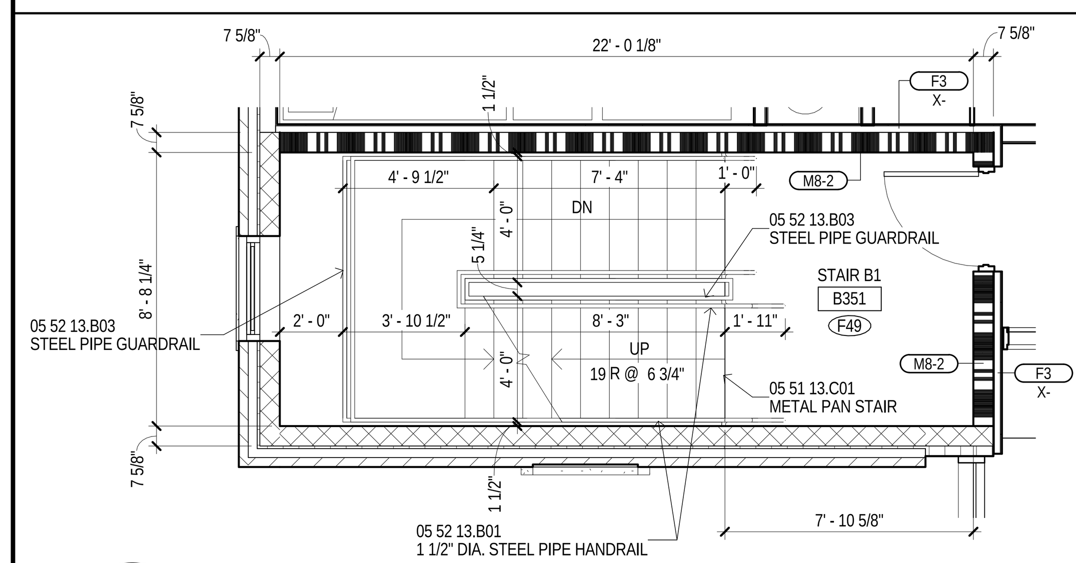

8 BUILDING B - STAIR B1 B351 - 3RD FLR
1/4" = 1'-0" A103B

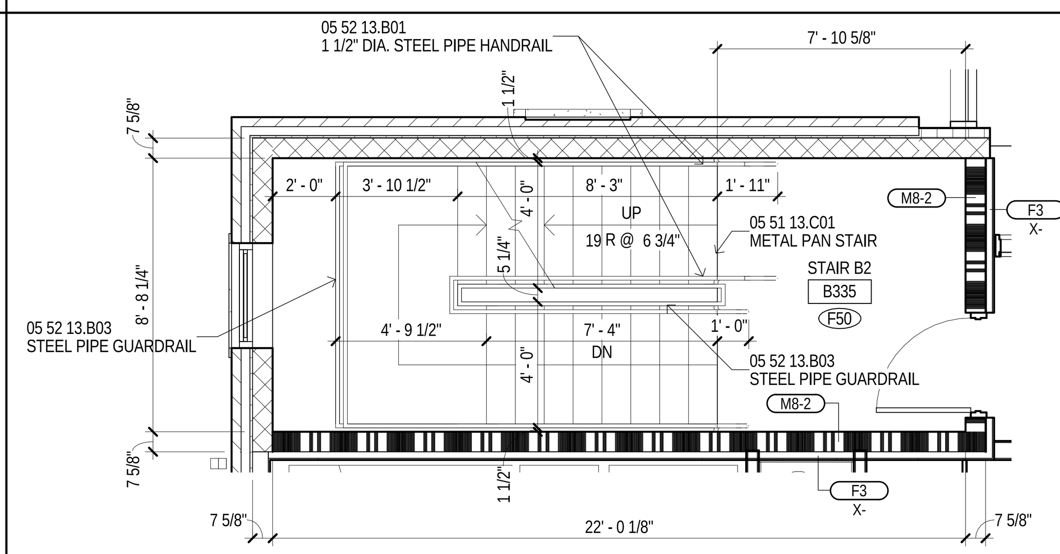

9 BUILDING B - STAIR B2 B335 - 3RD FLR
1/4" = 1'-0" A103B

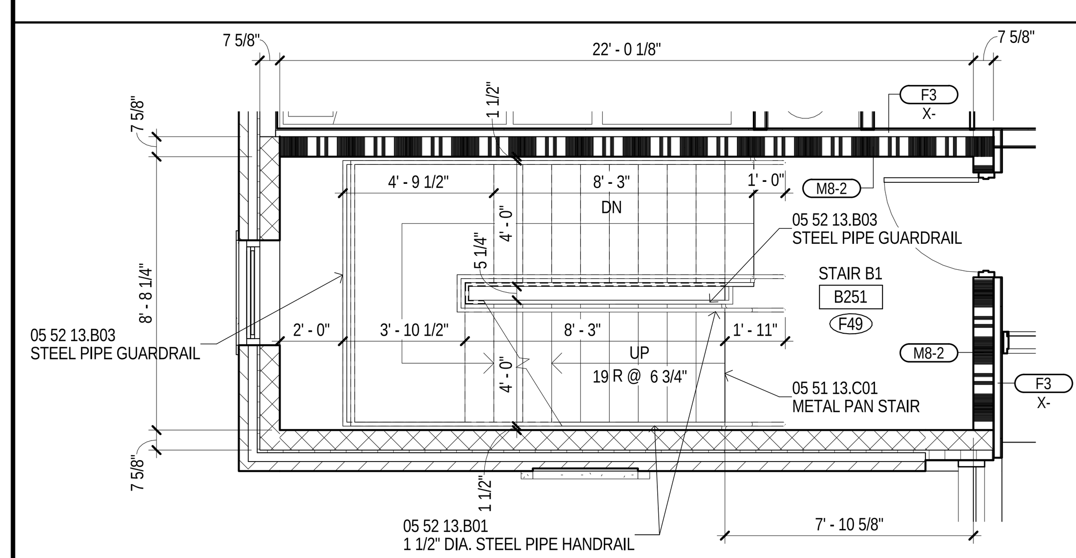

10 BUILDING B - STAIR B1 B251 - 2ND FLR
1/4" = 1'-0" A102B

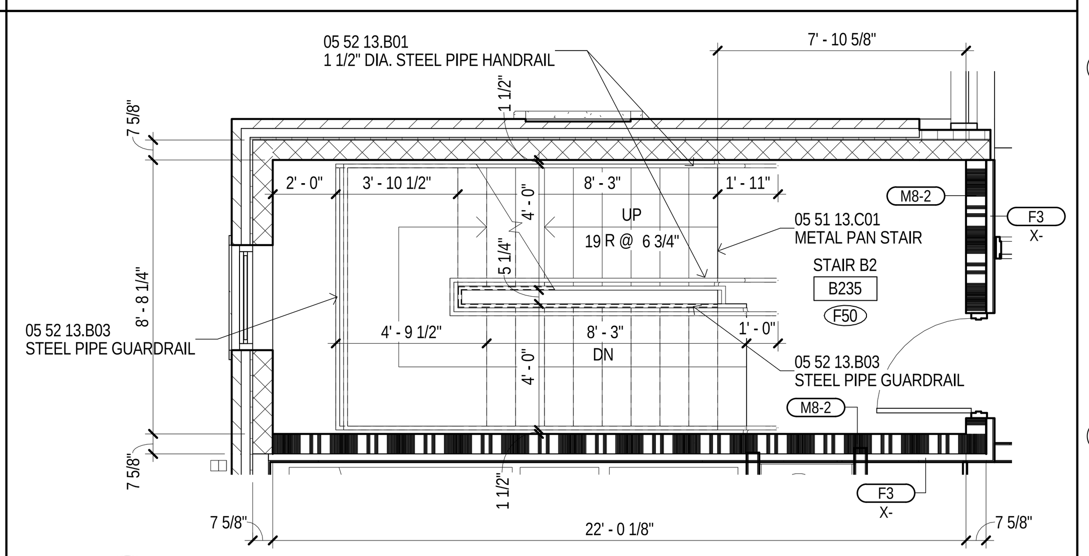

11 BUILDING B - STAIR B2 B235 - 2ND FLR
1/4" = 1'-0" A102B

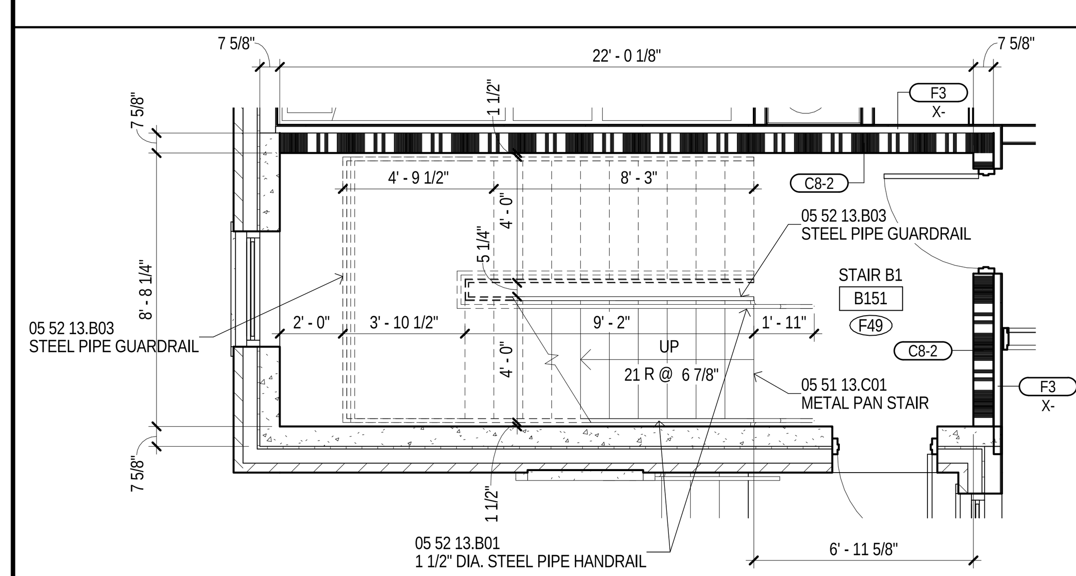

12 BUILDING B - STAIR B1 B151 - 1ST FLR
1/4" = 1'-0" A101B

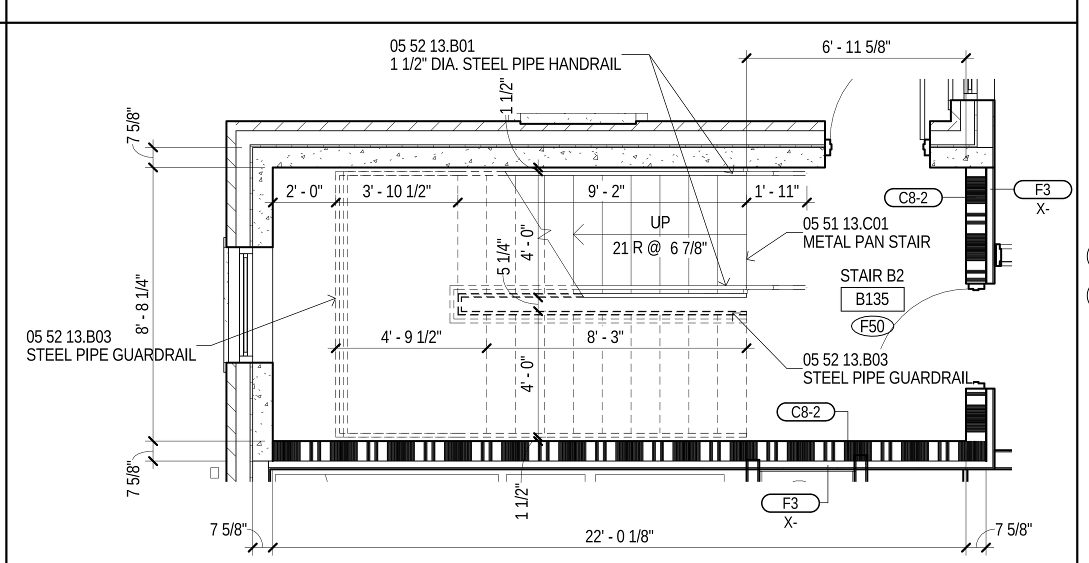

13 BUILDING B - STAIR B2 B135 - 1ST FLR
1/4" = 1'-0" A101B

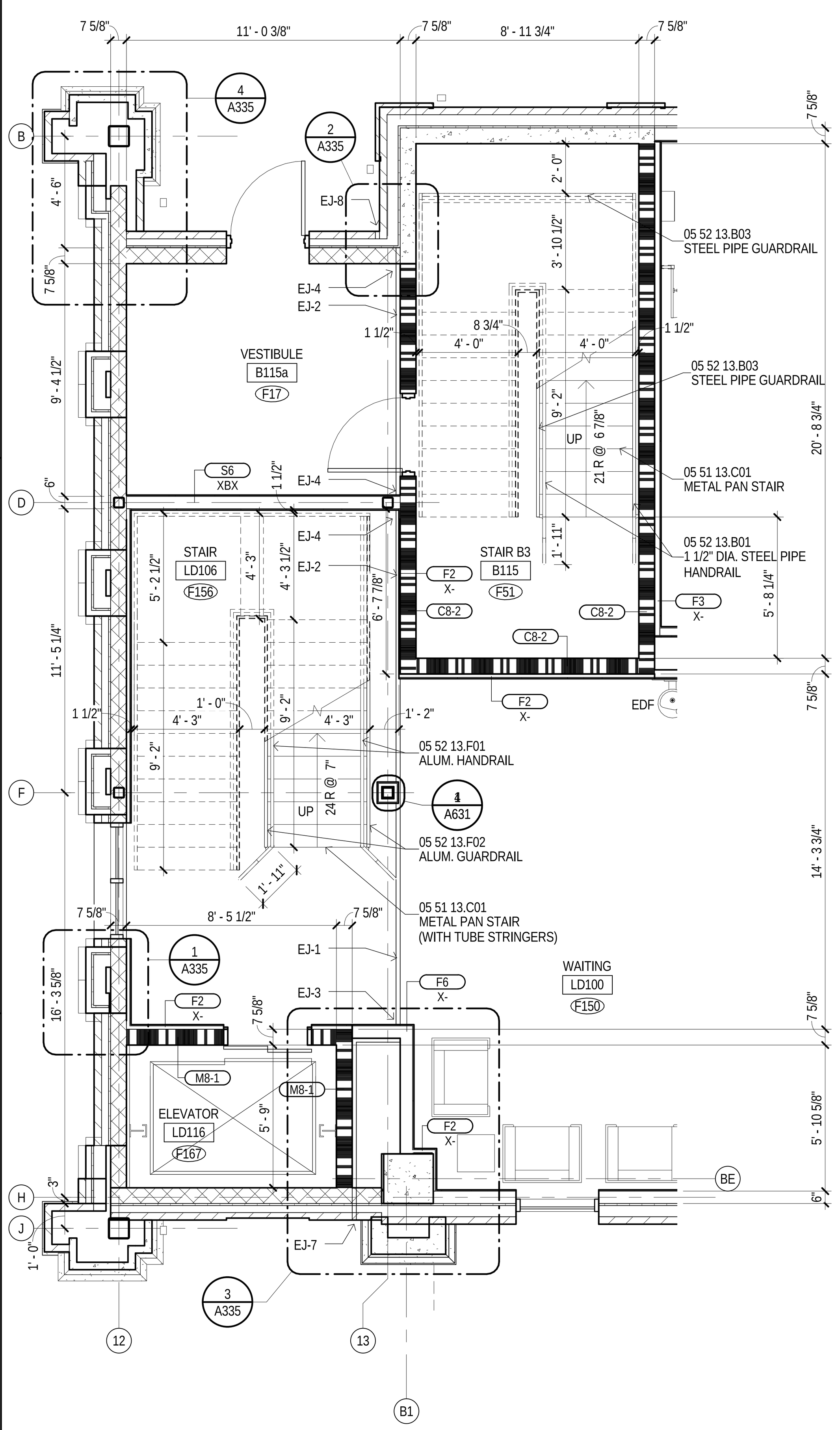

14 BUILDING B - ELEVATOR & STAIRS - 1ST FLR
1/4" = 1'-0" A101B

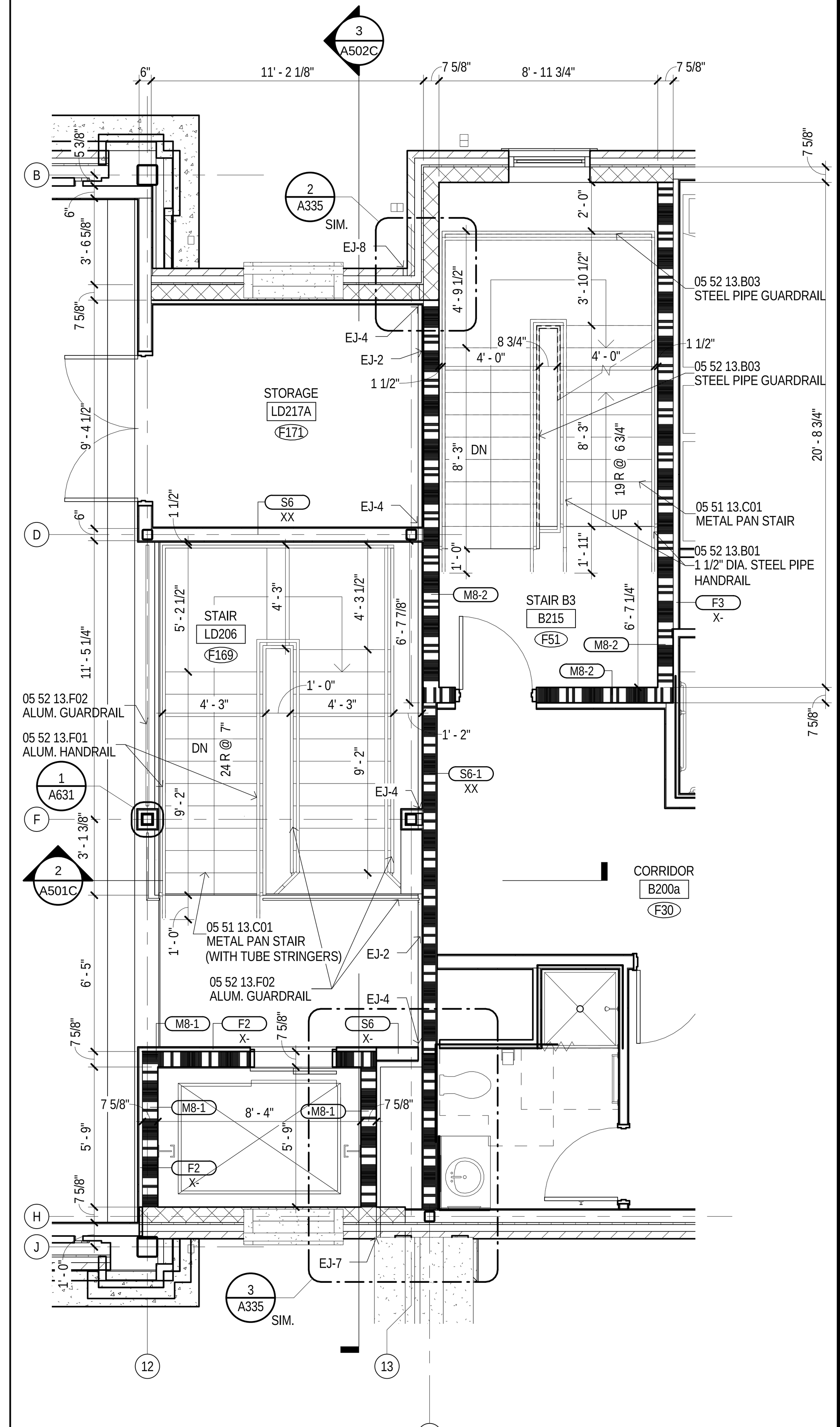

15 BUILDING B - ELEVATOR & STAIRS - 2ND FLR
1/4" = 1'-0" A102B

MATERIAL KEYING

05 51 13.C01	METAL PAN STAIR
05 52 13.B01	1 1/2" DIA. STEEL PIPE HANDRAIL
05 52 13.B03	STEEL PIPE GUARDRAIL
05 52 13.F01	ALUM. HANDRAIL
05 52 13.F02	ALUM. GUARDRAIL

LEGEND

FEC	10 44 13.B01 SEMI-RECESSED FIRE EXT. CABINET
FEB	10 44 13.C01 FIRE EXT. BRACKET
DS	PREMANUFACTURED ALUMINUM DOWNSPOUT
EDF-1	ELECTRIC DRINKING FOUNTAIN. SEE PLUMBING.
EDF-2	ELECTRIC DRINKING FOUNTAIN. SEE PLUMBING.
EDF-3	ELECTRIC DRINKING FOUNTAIN WITH BOTTLE FILLER. SEE PLUMBING.
MBH-1	10 28 00.L01 MOP AND BROOM HOLDER (MBH-1)
CJ	CONTROL JOINT
EJ-#	07 95 00.### EXPANSION JOINT COVER (EJ-#)
E.P.	EMERGENCY PHONE SEE ELECTRICAL

GENERAL NOTES

A UNLESS SPECIFICALLY NOTED OTHERWISE - INTERIOR DIMENSIONS ARE TO FACE OF STUD, FACE OF CMU OR FACE OF CONCRETE WHERE INDICATED. WHERE FACE OF FINISH OR CLEAR DIMENSIONS ARE INDICATED FOR COORDINATION PURPOSES OR TO DESIGNATE REQUIRED CODE CLEARANCES, THE DIMENSION IS TYPICALLY DESIGNATED AS "FOF" (FACE OF FINISH) OR "CLEAR".

B CONTRACTOR RESPONSIBLE FOR FIELD MEASUREMENTS ON OVERALL DIMENSIONS.

C ROUGH-IN AND CLEARANCE DIMENSIONS, BLOCKING AND ANCHORAGE FOR SHOWER UNITS, (AS WELL AS LAUNDRY EQUIPMENT, APPLIANCES, AND SIMILAR BUILT-IN OR DIMENSIONALLY CRITICAL ITEMS) IS TO BE PROVIDED PER THE MANUFACTURER'S WRITTEN INSTALLATION INSTRUCTIONS.

D DIMENSIONS INDICATED AT SHOWER FIXTURES ARE APPROXIMATE. PRIOR TO BEGINNING PARTITION LAYOUT WORK OBTAIN ACTUAL SAMPLES OF EACH PREFABRICATED SHOWER ENCLOSURE AND CONSTRUCT MOCK-UPS OF EACH TYPICAL CONDITION TO ESTABLISH EXACT ROUGH-IN DIMENSIONS AND FRAMING, BLOCKING AND FINISH DETAILS.

E SHOWER UNITS SHALL BE GROUTED SOLID UNDERNEATH - FILL VOID BETWEEN FLOOR SLAB AND FLOOR OF SHOWER.

F DWELLING UNITS DESIGNATED AS "HC" ON THE PLANS ARE UNITS WITH MOBILITY FEATURES IN ACCORDANCE WITH APPLICABLE ACCESSIBILITY CODES. ROOMS NOTED "HC-R" ARE PROVIDED WITH ROLL-IN TYPE SHOWER ENCLOSURESS. ROOMS NOTED AS "HC-T" ARE PROVIDED WITH TRANSFER TYPE SHOWER ENCLOSURES. UNITS DESIGNATED WITH "C" ARE UNITS TO BE PROVIDED WITH COMMUNICATIONS FEATURES.

G ALL DWELLING UNITS NOT DESIGNATED AS "HC" ARE TO BE CONSTRUCTED AS "TYPE B" UNITS PER CHAPTER 11 OF ICC AND APPLICABLE PROVISIONS OF ICC/ANSI A117.1 AND THE FAIR HOUSING ACT DESIGN MANUAL.

H EXCEPT AS NOTED OTHERWISE, LAUNDRY EQUIPMENT AND RESIDENTIAL APPLIANCES ARE NOT IN CONTRACT (NIC) - LAUNDRY EQUIPMENT WILL BE FURNISHED AND INSTALLED BY THE OWNER'S SEPARATE LAUNDRY CONTRACTOR (WITH THE EXCEPTION OF STAFF APARTMENT LAUNDRY EQUIPMENT). RESIDENTIAL KITCHEN EQUIPMENT (WITH THE EXCEPTION OF WALL OVENS AND RANGE HOODS) WILL BE OWNER FURNISHED AND CONTRACTOR INSTALLED. PROVIDE ROUGH-IN FOR LAUNDRY EQUIPMENT AND RESIDENTIAL KITCHEN APPLIANCES. REFER TO ELECTRICAL DRAWINGS FOR POWER AND DATA - REFER TO PLUMBING DRAWINGS FOR GAS, WATER AND DRAINAGE - REFER TO MECHANICAL DRAWING FOR EXHAUSTING AS APPLICABLE. COORDINATE ROUGH-IN REQUIREMENTS WITH THE OWNER AND OBTAIN MANUFACTURER'S REQUIREMENTS PRIOR TO COMMENCEMENT OF ROUGH-IN WORK.

I LOCATE WHEELCHAIR ACCESSIBLE WATER CLOSETS 17" FROM CENTERLINE OF WATER CLOSET TO FACE OF FINISH AT ADJACENT WALL, TYPICAL. FLUSH HANDLES TO BE LOCATED ON THE WIDE (OPEN) SIDE OF THE FIXTURE, TYPICAL.

J PROVIDE FLOOR DRAINS (FD) AT ROLL-IN (R) AND TRANSFER (T) SHOWERS. REFER TO PLUMBING DRAWINGS, SLOPE FLOORS TO DRAIN.

K WHERE NOTED AT HANDICAP ACCESSIBLE DWELLING UNITS, PROVIDE REMOVABLE BASE CABINETS AT KITCHEN AND BATHROOM SINKS COMPLYING WITH THE REQUIREMENTS OF ADA STANDARDS FOR ACCESSIBLE DESIGN (SECTION 606.2 EXCEPTION NO. 3).

L CONTRACTOR TO PROVIDE 12 GAGE METAL BLOCKING IN STUD WALLS FOR ANCHORAGE OF WALL MOUNTED ITEMS INCLUDING BUT NOT LIMITED TO TOILET ACCESSORIES, WALL CABINETS, WALL MOUNTED TV'S, SHELVING, TOILET PARTITIONS, OWNER FURNISHED EQUIPMENT INDICATED AND SIMILAR ITEMS. FOR "TYPE B" DWELLING UNITS, PROVIDE METAL BLOCKING IN WALLS FOR FUTURE INSTALLATIONS AS INDICATED. FOR WALL MOUNTED TV'S IN LOUNGES, PROVIDE METAL BLOCKING 24" ABOVE AND BELOW ELECTRICAL JUNCTION BOXES.

M REFER TO A026 FOR DESCRIPTION OF ALL PARTITION TYPES.

N REFER TO A100 (1/8" FLOOR PLANS) SERIES DRAWINGS AND A300 SERIES DRAWINGS (ENLARGED PLANS) FOR PARTITION TYPE LOCATIONS.

O REFER TO LS SERIES DRAWING (LIFE SAFETY PLANS) FOR LOCATIONS OF FIRE RATED WALLS AND PARTITIONS.

P REFER TO A000 SERIES DRAWINGS FOR WINDOW TYPES AND DOOR TYPES, SCHEDULES AND DETAILS.

Q REFER TO A000 SERIES DRAWINGS FOR INTERIOR FINISH SCHEDULES.

R REFER TO A100 SERIES DRAWINGS (ENLARGED PLANS) FOR ADDITIONAL PLAN NOTES.

S REFER TO PROJECT MANUAL SECTION 10 28 00 FOR TOILET ACCESSORY SCHEDULE.

REGISTERED ARCHITECT Thomas D. Saunders 3693 Tupelo, MS STATE OF MISSISSIPPI
04 march 2013

THE McCARTY COMPANY
DESIGN GROUP, P.A.

TELEPHONE: (662) 844-4400
FAX: (662) 844-0500
OFFICE ADDRESS: 533 WEST MAIN STREET TUPELO, MS 38804
MAILING ADDRESS: P.O. BOX 440 TUPELO, MS 38802

DESIGN ARCHITECT
Hanbury Evans Wright Vlattas + Company
120 Atlantic Street
Norfolk, VA 23510
757.321.9600
www.hewv.com

PROJECT TITLE
USM - CENTURY PARK SOUTH
IHL# 208-297
HATTIESBURG, MISSISSIPPI

THE UNIVERSITY OF SOUTHERN MISSISSIPPI

PROJECT NO: 2012020
DRAWN BY: BKS
CHECKED BY: JPH
DATE ISSUED: 04 MAR 2013

REVISIONS & ADDENDUMS

SHEET TITLE
ENLARGED PLANS AND SECTIONS - STAIRS AND ELEVATORS

SHEET NUMBER
A303

Plot Date: BID DOCUMENTS - 04 MAR 2013
3/11/2013 5:29:04 AM

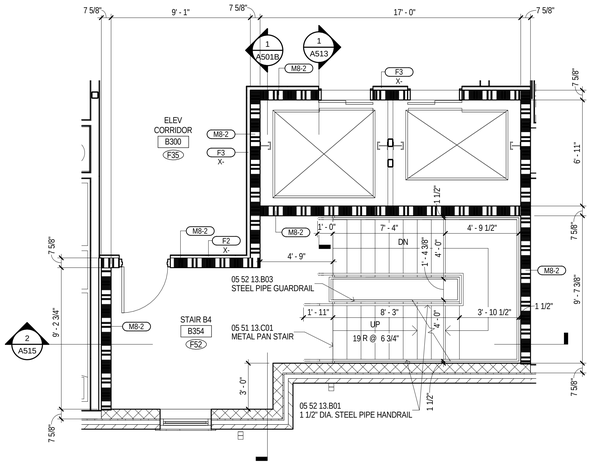

1 BUILDING B - STAIR B4 B354 & ELEVATORS - 3RD FLR
1/4" = 1'-0" A103B

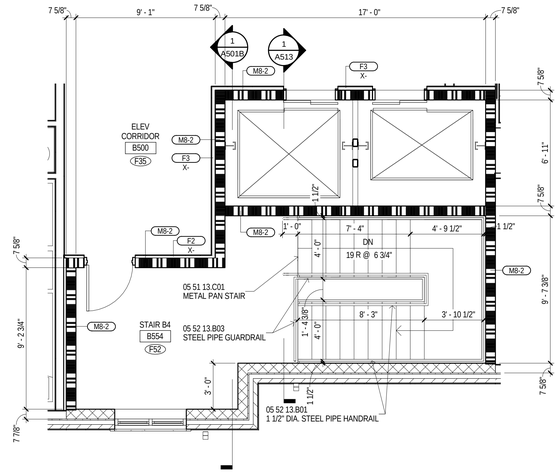

2 BUILDING B - STAIR B4 B554 & ELEVATORS - 5TH FLR
1/4" = 1'-0" A105B

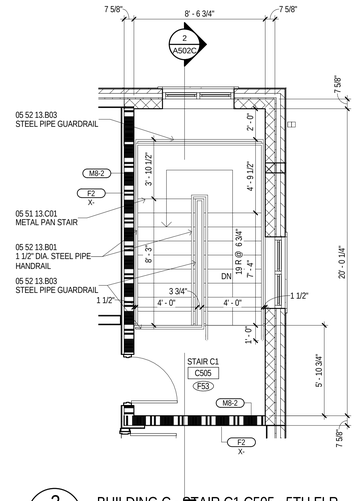

3 BUILDING C - STAIR C1 C505 - 5TH FLR
1/4" = 1'-0" A105B

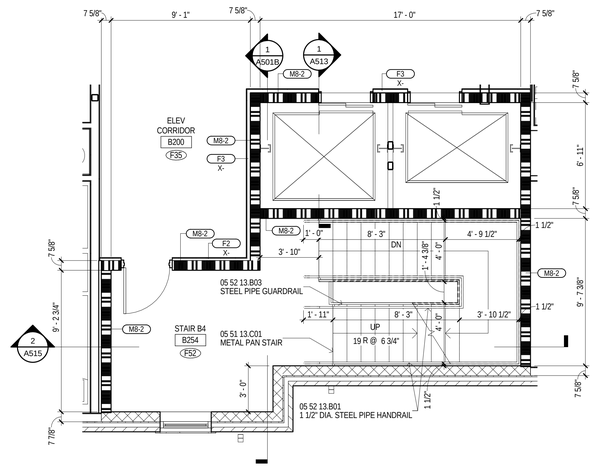

4 BUILDING B - STAIR B4 B254 & ELEVATORS - 2ND FLR
1/4" = 1'-0" A102B

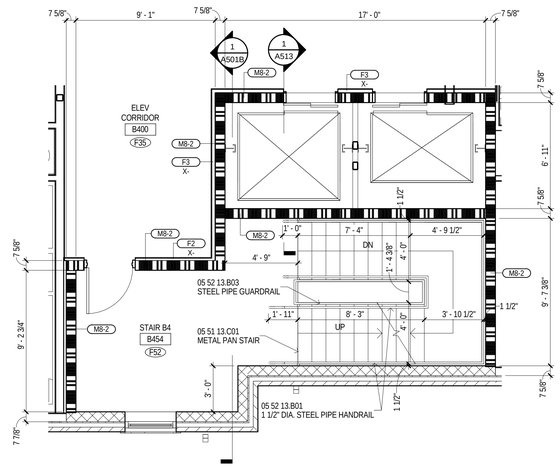

5 BUILDING B - STAIR B4 B454 & ELEVATORS - 4TH FLR
1/4" = 1'-0" A101B

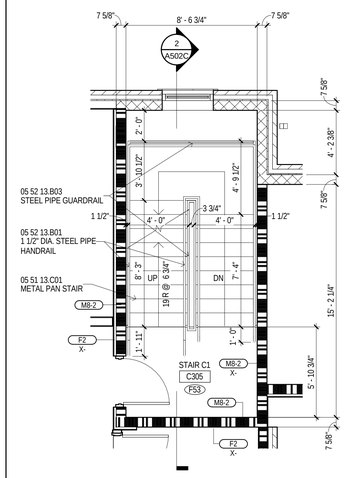

6 BUILDING C - STAIR C1 C305 - 3RD FLR
1/4" = 1'-0" A103B

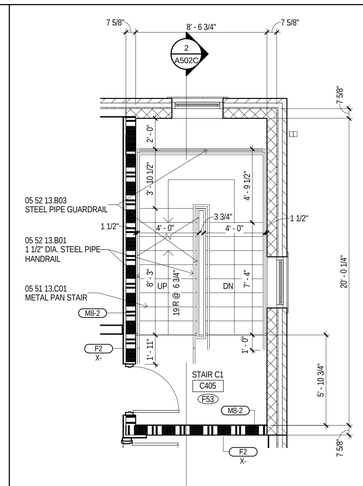

7 BUILDING C - STAIR C1 C405 - 4TH FLR
1/4" = 1'-0"

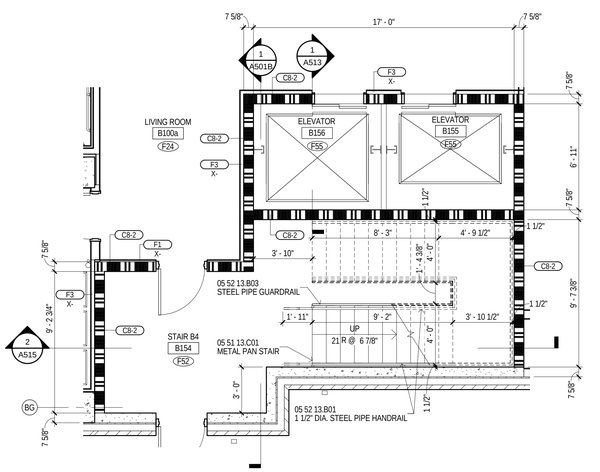

8 BUILDING B - STAIR B4 B154 & ELEVATORS - 1ST FLR
1/4" = 1'-0" A101B

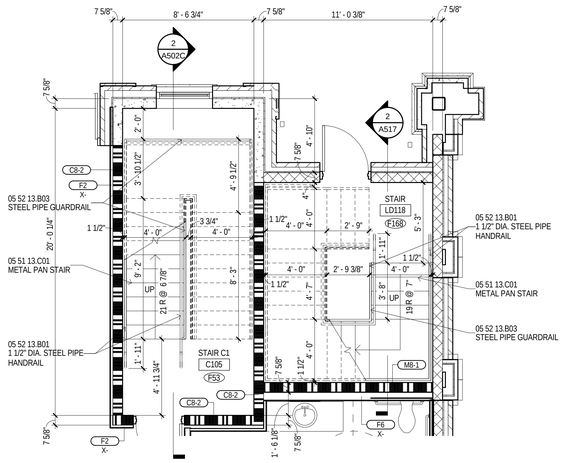

9 BUILDING C - STAIR C1 C105 / STAIR LD118 - 1ST FLR
1/4" = 1'-0" A101B

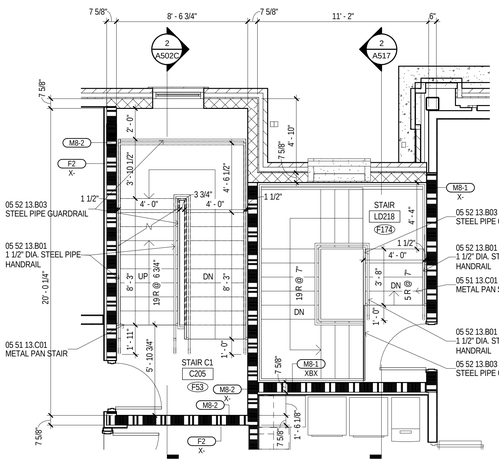

10 BUILDING C - STAIR C1 C205 / STAIR LD218 - 2ND FLR
1/4" = 1'-0" A102B

MATERIAL KEYING

05 51 13.C01	METAL PAN STAIR
05 52 13.B01	1 1/2" DIA. STEEL PIPE HANDRAIL
05 52 13.B03	STEEL PIPE GUARDRAIL

LEGEND

FEC	10 44 13.B01 SEMI-RECESSED FIRE EXT. CABINET
FEB	10 44 13.C01 FIRE EXT. BRACKET
DS	PREMANUFACTURED ALUMINUM DOWNSPOUT
EDF-1	ELECTRIC DRINKING FOUNTAIN. SEE PLUMBING.
EDF-2	ELECTRIC DRINKING FOUNTAIN. SEE PLUMBING.
EDF-3	ELECTRIC DRINKING FOUNTAIN WITH BOTTLE FILLER. SEE PLUMBING.
MBH-1	10 28 00.L01 MOP AND BROOM HOLDER (MBH-1)
CJ	CONTROL JOINT
EJ-#	07 95 00.### EXPANSION JOINT COVER (EJ-#)
E.P.	EMERGENCY PHONE SEE ELECTRICAL

GENERAL NOTES

A UNLESS SPECIFICALLY NOTED OTHERWISE - INTERIOR DIMENSIONS ARE TO FACE OF STUD, FACE OF CMU OR FACE OF CONCRETE WHERE INDICATED. WHERE FACE OF FINISH OR CLEAR DIMENSIONS ARE INDICATED FOR COORDINATION PURPOSES OR TO DESIGNATE REQUIRED CODE CLEARANCES, THE DIMENSION IS TYPICALLY DESIGNATED AS "FOF" (FACE OF FINISH) OR "CLEAR".

B CONTRACTOR RESPONSIBLE FOR FIELD MEASUREMENTS ON OVERALL DIMENSIONS.

C ROUGH-IN AND CLEARANCE DIMENSIONS, BLOCKING AND ANCHORAGE FOR SHOWER UNITS, (AS WELL AS LAUNDRY EQUIPMENT, APPLIANCES, AND SIMILAR BUILT-IN OR DIMENSIONALLY CRITICAL ITEMS) IS TO BE PROVIDED PER THE MANUFACTURER'S WRITTEN INSTALLATION INSTRUCTIONS.

D DIMENSIONS INDICATED AT SHOWER FIXTURES ARE APPROXIMATE. PRIOR TO BEGINNING PARTITION LAYOUT WORK OBTAIN ACTUAL SAMPLES OF EACH PREFABRICATED SHOWER ENCLOSURE AND CONSTRUCT MOCK-UPS OF EACH TYPICAL CONDITION TO ESTABLISH EXACT ROUGH-IN DIMENSIONS AND FRAMING, BLOCKING AND FINISH DETAILS.

E SHOWER UNITS SHALL BE GROUTED SOLID UNDERNEATH - FILL VOID BETWEEN FLOOR SLAB AND FLOOR OF SHOWER.

F DWELLING UNITS DESIGNATED AS "HC" ON THE PLANS ARE UNITS WITH MOBILITY FEATURES IN ACCORDANCE WITH APPLICABLE ACCESSIBILITY CODES. ROOMS NOTED "HC-R" ARE PROVIDED WITH ROLL-IN TYPE SHOWER ENCLOSURESS. ROOMS NOTED AS "HC-T" ARE PROVIDED WITH TRANSFER TYPE SHOWER ENCLOSURES. UNITS DESIGNATED WITH "C" ARE UNITS TO BE PROVIDED WITH COMMUNICATIONS FEATURES.

G ALL DWELLING UNITS NOT DESIGNATED AS "HC" ARE TO BE CONSTRUCTED AS "TYPE B" UNITS PER CHAPTER 11 OF ICC AND APPLICABLE PROVISIONS OF ICC/ANSI A117.1 AND THE FAIR HOUSING ACT DESIGN MANUAL.

H EXCEPT AS NOTED OTHERWISE, LAUNDRY EQUIPMENT AND RESIDENTIAL APPLIANCES ARE NOT IN CONTRACT (NIC) - LAUNDRY EQUIPMENT WILL BE FURNISHED AND INSTALLED BY THE OWNER'S SEPARATE LAUNDRY CONTRACTOR (WITH THE EXCEPTION OF STAFF APARTMENT LAUNDRY EQUIPMENT). RESIDENTIAL KITCHEN EQUIPMENT (WITH THE EXCEPTION OF WALL OVENS AND RANGE HOODS) WILL BE OWNER FURNISHED AND CONTRACTOR INSTALLED. PROVIDE ROUGH-IN FOR LAUNDRY EQUIPMENT AND RESIDENTIAL KITCHEN APPLIANCES. REFER TO ELECTRICAL DRAWINGS FOR POWER AND DATA - REFER TO PLUMBING DRAWINGS FOR GAS, WATER AND DRAINAGE - REFER TO MECHANICAL DRAWING FOR EXHAUSTING AS APPLICABLE. COORDINATE ROUGH-IN REQUIREMENTS WITH THE OWNER AND OBTAIN MANUFACTURER'S REQUIREMENTS PRIOR TO COMMENCEMENT OF ROUGH-IN WORK.

I LOCATE WHEELCHAIR ACCESSIBLE WATER CLOSETS 17" FROM CENTERLINE OF WATER CLOSET TO FACE OF FINISH AT ADJACENT WALL, TYPICAL. FLUSH HANDLES TO BE LOCATED ON THE WIDE (OPEN) SIDE OF THE FIXTURE, TYPICAL.

J PROVIDE FLOOR DRAINS (FD) AT ROLL-IN (R) AND TRANSFER (T) SHOWERS. REFER TO PLUMBING DRAWINGS, SLOPE FLOORS TO DRAIN.

K WHERE NOTED AT HANDICAP ACCESSIBLE DWELLING UNITS, PROVIDE REMOVABLE BASE CABINETS AT KITCHEN AND BATHROOM SINKS COMPLYING WITH THE REQUIREMENTS OF ADA STANDARDS FOR ACCESSIBLE DESIGN (SECTION 606.2 EXCEPTION NO. 3).

L CONTRACTOR TO PROVIDE 12 GAGE METAL BLOCKING IN STUD WALLS FOR ANCHORAGE OF WALL MOUNTED ITEMS INCLUDING BUT NOT LIMITED TO TOILET ACCESSORIES, WALL CABINETS, WALL MOUNTED TV'S, SHELVING, TOILET PARTITIONS, OWNER FURNISHED EQUIPMENT INDICATED AND SIMILAR ITEMS. FOR "TYPE B" DWELLING UNITS, PROVIDE METAL BLOCKING IN WALLS FOR FUTURE INSTALLATIONS AS INDICATED. FOR WALL MOUNTED TV'S IN LOUNGES, PROVIDE METAL BLOCKING 24" ABOVE AND BELOW ELECTRICAL JUNCTION BOXES.

M REFER TO A026 FOR DESCRIPTION OF ALL PARTITION TYPES.

N REFER TO A100 (1/8" FLOOR PLANS) SERIES DRAWINGS AND A300 SERIES DRAWINGS (ENLARGED PLANS) FOR PARTITION TYPE LOCATIONS.

O REFER TO LS SERIES DRAWING (LIFE SAFETY PLANS) FOR LOCATIONS OF FIRE RATED WALLS AND PARTITIONS.

P REFER TO A000 SERIES DRAWINGS FOR WINDOW TYPES AND DOOR TYPES, SCHEDULES AND DETAILS.

Q REFER TO A000 SERIES DRAWINGS FOR INTERIOR FINISH SCHEDULES.

R REFER TO A100 SERIES DRAWINGS (ENLARGED PLANS) FOR ADDITIONAL PLAN NOTES.

S REFER TO PROJECT MANUAL SECTION 10 28 00 FOR TOILET ACCESSORY SCHEDULE.

REGISTERED ARCHITECT JAMES PHILLIP HANBURY LAUNDRY 3449 TUPELO, MS STATE OF MISSISSIPPI
04 MARCH 2013

THE McCARTY COMPANY
DESIGN GROUP, P.A.
OFFICE ADDRESS: 533 WEST MAIN STREET TUPELO, MS 38804
MAILING ADDRESS: P.O. BOX 440 TUPELO, MS 38802
TELEPHONE: (662) 844-4400 FAX: (662) 844-0520

DESIGN ARCHITECT
Hanbury Evans Wright Vlattas + Company
120 Atlantic Street
Norfolk, VA 23510
757.321.9600
www.hewv.com

PROJECT TITLE
USM - CENTURY PARK SOUTH
IHL# 208-297
HATTIESBURG, MISSISSIPPI

THE UNIVERSITY OF SOUTHERN MISSISSIPPI

PROJECT NO: 2012020
DRAWN BY: BKS
CHECKED BY: JPH
DATE ISSUED: 04 MAR 2013

REVISIONS & ADDENDUMS

SHEET TITLE
ENLARGED PLANS AND SECTIONS - STAIRS AND ELEVATORS

SHEET NUMBER
A304

3/11/2013 5:29:56 AM

Plot Date: BID DOCUMENTS - 04 MAR 2013

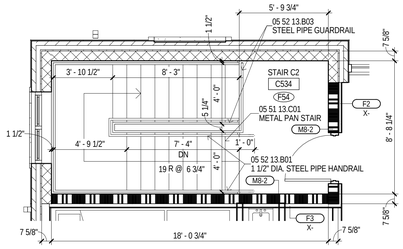

1 BUILDING C - STAIR C2 C534 - 5TH FLR
1/4" = 1'-0"
A105B

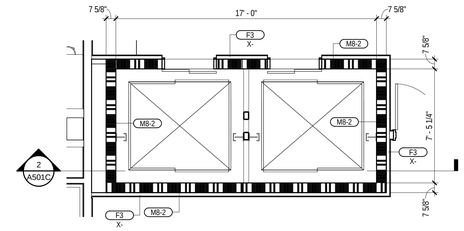

2 BUILDING C - ELEVATORS - 5TH FLR
1/4" = 1'-0"
A105B

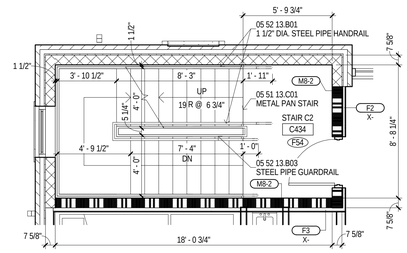

3 BUILDING C - STAIR C2 C434 - 4TH FLR
1/4" = 1'-0"

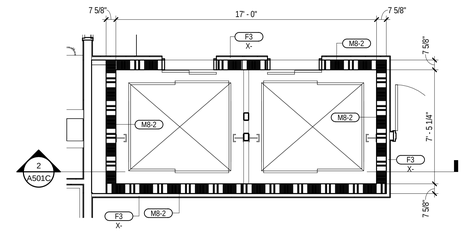

4 BUILDING C - ELEVATORS - 4TH FLR
1/4" = 1'-0"

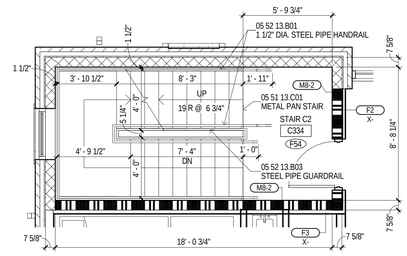

5 BUILDING C - STAIR C2 C334 - 3RD FLR
1/4" = 1'-0"
A103B

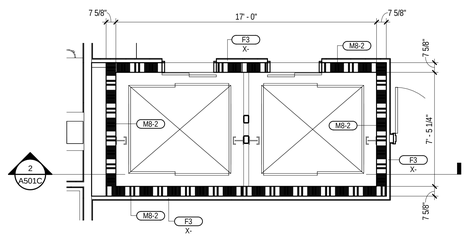

7 BUILDING C - ELEVATORS - 3RD FLR
1/4" = 1'-0"
A103B

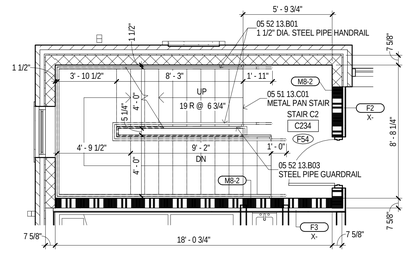

6 BUILDING C - STAIR C2 C234 - 2ND FLR
1/4" = 1'-0"
A102B

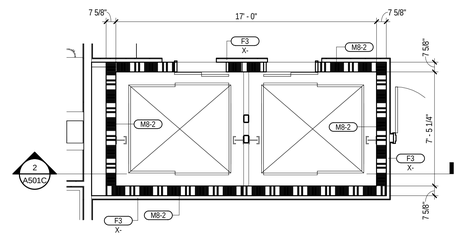

9 BUILDING C - ELEVATORS - 2ND FLR
1/4" = 1'-0"
A102B

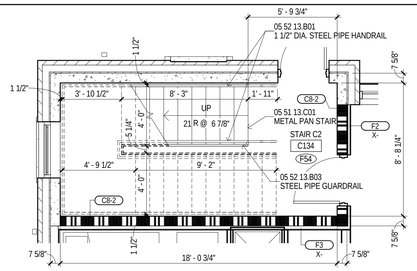

8 BUILDING C - STAIR C2 C134 - 1ST FLR
1/4" = 1'-0"
A101B

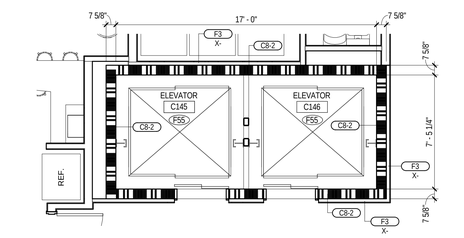

10 BUILDING C - ELEVATORS - 1ST FLR
1/4" = 1'-0"
A101B

MATERIAL KEYING

05 51 13.C01	METAL PAN STAIR
05 52 13.B01	1 1/2" DIA. STEEL PIPE HANDRAIL
05 52 13.B03	STEEL PIPE GUARDRAIL

LEGEND

FEC	10 44 13.B01 SEMI-RECESSED FIRE EXT. CABINET
FEB	10 44 13.C01 FIRE EXT. BRACKET
DS	PREMANUFACTURED ALUMINUM DOWNSPOUT
EDF-1	ELECTRIC DRINKING FOUNTAIN. SEE PLUMBING.
EDF-2	ELECTRIC DRINKING FOUNTAIN. SEE PLUMBING.
EDF-3	ELECTRIC DRINKING FOUNTAIN WITH BOTTLE FILLER. SEE PLUMBING.
MBH-1	10 28 00.L01 MOP AND BROOM HOLDER (MBH-1)
CJ	CONTROL JOINT
EJ-#	07 95 00.### EXPANSION JOINT COVER (EJ-#)
E.P.	EMERGENCY PHONE SEE ELECTRICAL

GENERAL NOTES

A UNLESS SPECIFICALLY NOTED OTHERWISE - INTERIOR DIMENSIONS ARE TO FACE OF STUD, FACE OF CMU OR FACE OF CONCRETE WHERE INDICATED. WHERE FACE OF FINISH OR CLEAR DIMENSIONS ARE INDICATED FOR COORDINATION PURPOSES OR TO DESIGNATE REQUIRED CODE CLEARANCES, THE DIMENSION IS TYPICALLY DESIGNATED AS "FOF" (FACE OF FINISH) OR "CLEAR".

B CONTRACTOR RESPONSIBLE FOR FIELD MEASUREMENTS ON OVERALL DIMENSIONS.

C ROUGH-IN AND CLEARANCE DIMENSIONS, BLOCKING AND ANCHORAGE FOR SHOWER UNITS, (AS WELL AS LAUNDRY EQUIPMENT, APPLIANCES, AND SIMILAR BUILT-IN OR DIMENSIONALLY CRITICAL ITEMS) IS TO BE PROVIDED PER THE MANUFACTURER'S WRITTEN INSTALLATION INSTRUCTIONS.

D DIMENSIONS INDICATED AT SHOWER FIXTURES ARE APPROXIMATE. PRIOR TO BEGINNING PARTITION LAYOUT WORK OBTAIN ACTUAL SAMPLES OF EACH PREFABRICATED SHOWER ENCLOSURE AND CONSTRUCT MOCK-UPS OF EACH TYPICAL CONDITION TO ESTABLISH EXACT ROUGH-IN DIMENSIONS AND FRAMING, BLOCKING AND FINISH DETAILS.

E SHOWER UNITS SHALL BE GROUTED SOLID UNDERNEATH - FILL VOID BETWEEN FLOOR SLAB AND FLOOR OF SHOWER.

F DWELLING UNITS DESIGNATED AS "HC" ON THE PLANS ARE UNITS WITH MOBILITY FEATURES IN ACCORDANCE WITH APPLICABLE ACCESSIBILITY CODES. ROOMS NOTED "HC-R" ARE PROVIDED WITH ROLL-IN TYPE SHOWER ENCLOSURESS. ROOMS NOTED AS "HC-T" ARE PROVIDED WITH TRANSFER TYPE SHOWER ENCLOSURES. UNITS DESIGNATED WITH "C" ARE UNITS TO BE PROVIDED WITH COMMUNICATIONS FEATURES.

G ALL DWELLING UNITS NOT DESIGNATED AS "HC" ARE TO BE CONSTRUCTED AS "TYPE B" UNITS PER CHAPTER 11 OF ICC AND APPLICABLE PROVISIONS OF ICC/ANSI A117.1 AND THE FAIR HOUSING ACT DESIGN MANUAL.

H EXCEPT AS NOTED OTHERWISE, LAUNDRY EQUIPMENT AND RESIDENTIAL APPLIANCES ARE NOT IN CONTRACT (NIC) - LAUNDRY EQUIPMENT WILL BE FURNISHED AND INSTALLED BY THE OWNER'S SEPARATE LAUNDRY CONTRACTOR (WITH THE EXCEPTION OF STAFF APARTMENT LAUNDRY EQUIPMENT). RESIDENTIAL KITCHEN EQUIPMENT (WITH THE EXCEPTION OF WALL OVENS AND RANGE HOODS) WILL BE OWNER FURNISHED AND CONTRACTOR INSTALLED. PROVIDE ROUGH-IN FOR LAUNDRY EQUIPMENT AND RESIDENTIAL KITCHEN APPLIANCES. REFER TO ELECTRICAL DRAWINGS FOR POWER AND DATA - REFER TO PLUMBING DRAWINGS FOR GAS, WATER AND DRAINAGE - REFER TO MECHANICAL DRAWING FOR EXHAUSTING AS APPLICABLE. COORDINATE ROUGH-IN REQUIREMENTS WITH THE OWNER AND OBTAIN MANUFACTURER'S REQUIREMENTS PRIOR TO COMMENCEMENT OF ROUGH-IN WORK.

I LOCATE WHEELCHAIR ACCESSIBLE WATER CLOSETS 17" FROM CENTERLINE OF WATER CLOSET TO FACE OF FINISH AT ADJACENT WALL, TYPICAL. FLUSH HANDLES TO BE LOCATED ON THE WIDE (OPEN) SIDE OF THE FIXTURE, TYPICAL.

J PROVIDE FLOOR DRAINS (FD) AT ROLL-IN (R) AND TRANSFER (T) SHOWERS. REFER TO PLUMBING DRAWINGS, SLOPE FLOORS TO DRAIN.

K WHERE NOTED AT HANDICAP ACCESSIBLE DWELLING UNITS, PROVIDE REMOVABLE BASE CABINETS AT KITCHEN AND BATHROOM SINKS COMPLYING WITH THE REQUIREMENTS OF ADA STANDARDS FOR ACCESSIBLE DESIGN (SECTION 606.2 EXCEPTION NO. 3).

L CONTRACTOR TO PROVIDE 12 GAGE METAL BLOCKING IN STUD WALLS FOR ANCHORAGE OF WALL MOUNTED ITEMS INCLUDING BUT NOT LIMITED TO TOILET ACCESSORIES, WALL CABINETS, WALL MOUNTED TVS, SHELVING, TOILET PARTITIONS, OWNER FURNISHED EQUIPMENT INDICATED AND SIMILAR ITEMS. FOR "TYPE B" DWELLING UNITS, PROVIDE METAL BLOCKING IN WALLS FOR FUTURE INSTALLATIONS AS INDICATED. FOR WALL MOUNTED TV'S IN LOUNGES, PROVIDE METAL BLOCKING 24" ABOVE AND BELOW ELECTRICAL JUNCTION BOXES.

M REFER TO A026 FOR DESCRIPTION OF ALL PARTITION TYPES.

N REFER TO A100 (1/8" FLOOR PLANS) SERIES DRAWINGS AND A300 SERIES DRAWINGS (ENLARGED PLANS) FOR PARTITION TYPE LOCATIONS.

O REFER TO LS SERIES DRAWING (LIFE SAFETY PLANS) FOR LOCATIONS OF FIRE RATED WALLS AND PARTITIONS.

P REFER TO A000 SERIES DRAWINGS FOR WINDOW TYPES AND DOOR TYPES, SCHEDULES AND DETAILS.

Q REFER TO A000 SERIES DRAWINGS FOR INTERIOR FINISH SCHEDULES.

R REFER TO A100 SERIES DRAWINGS (ENLARGED PLANS) FOR ADDITIONAL PLAN NOTES.

S REFER TO PROJECT MANUAL SECTION 10 28 00 FOR TOILET ACCESSORY SCHEDULE.

REGISTERED ARCHITECT
JAMES PAUL HARRISON
3462
TUPELO, MS
STATE OF MISSISSIPPI
04 MARCH 2013

THE McCARTY COMPANY
DESIGN GROUP, P.A.
OFFICE ADDRESS:
533 WEST MAIN STREET
TUPELO, MS 38804
TELEPHONE:
(662) 844-4400
FAX:
(662) 844-0520
MAILING ADDRESS:
P.O. BOX 440
TUPELO, MS 38802

DESIGN ARCHITECT
Hanbury Evans Wright Vlattas + Company
120 Atlantic Street
Norfolk, VA 23510
757.321.9600
www.hewv.com

PROJECT TITLE
USM - CENTURY PARK SOUTH
IHL# 208-297
HATTIESBURG, MISSISSIPPI

THE UNIVERSITY OF SOUTHERN MISSISSIPPI

PROJECT NO:
- 2012020

DRAWN BY:
- BKS

CHECKED BY:
- JPH

DATE ISSUED:
- 04 MAR 2013

REVISIONS & ADDENDUMS

SHEET TITLE
ENLARGED PLANS AND SECTIONS - STAIRS AND ELEVATORS

SHEET NUMBER
A305

3/11/2013 5:30:45 AM

Plot Date: BID DOCUMENTS - 04 MAR 2013

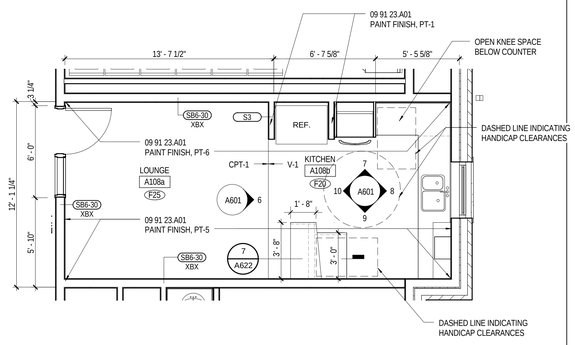

1 — A108 KITCHEN/LOUNGE - FIRST FLOOR - BUILDING A

1/4" = 1'-0" — A101A

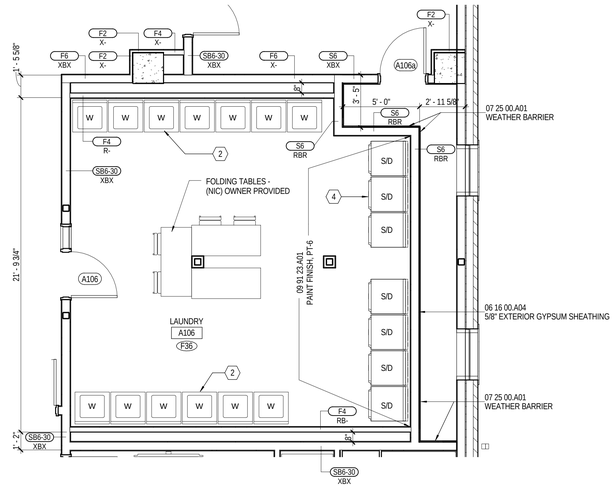

2 — A106 LAUNDRY ROOM - BUILDING A

1/4" = 1'-0" — A101A

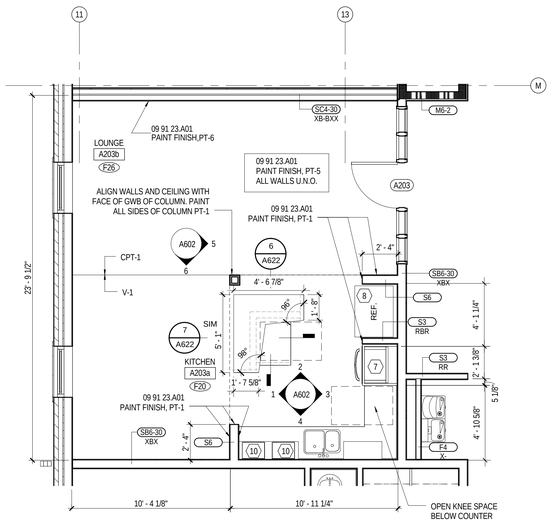

3 — A203 KITCHEN/LOUNGE - SECOND FLOOR - BUILDING A

1/4" = 1'-0" — A102A

NOTE: O.H. RM 254a & RM 254b

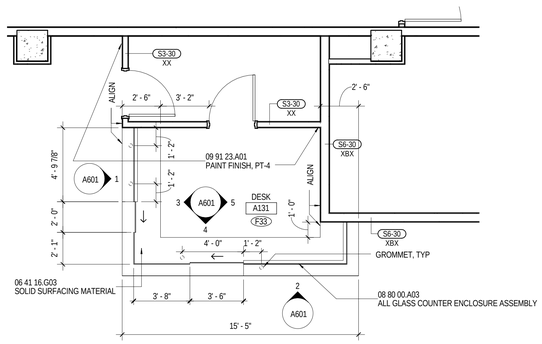

4 — A131 FRONT DESK - FIRST FLOOR - BUILDING A

1/4" = 1'-0" — A101A

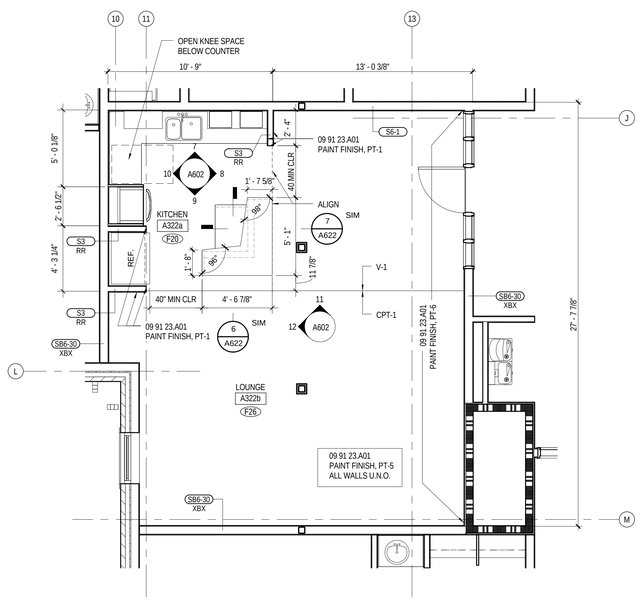

5 — A322 KITCHEN/LOUNGE - THIRD - FIFTH FLOOR - BUILDING A

1/4" = 1'-0" — A103A

NOTE: O.H. RM 352a & RM 352b, RM 452a & 452b, RM 552a & 552b

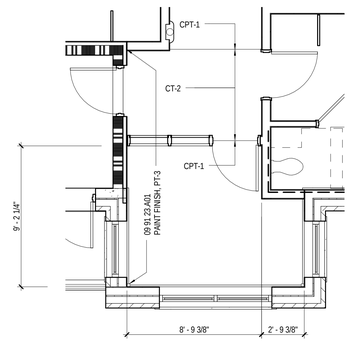

6 — BUILDING A & B - STAIR ENTRANCE (TYP ALL FLOORS) @ STAIR A1, A2, B1. SIM CONDITION AT B2

1/4" = 1'-0" — A101A

REF ARCH PLANS FOR STAIR B3 & C2

MATERIAL KEYING

06 16 00.A04	5/8" EXTERIOR GYPSUM SHEATHING
06 41 16.G03	SOLID SURFACING MATERIAL
07 25 00.A01	WEATHER BARRIER
08 80 00.A03	ALL GLASS COUNTER ENCLOSURE ASSEMBLY
09 91 23.A01	PAINT FINISH

NEW WORK NOTES ENLARGED PLANS AND INTERIOR ELEVATIONS

NEW WORK NOTES

1 STACKED WASHER/DRYER UNIT (W/D) NOT IN CONTRACT
2 FREESTANDING WASHER (W) NOT IN CONTRACT
3 FREESTANDING DRYER (D) NOT IN CONTRACT
4 STACKED DRYERS (S/D) NOT IN CONTRACT
5 FREESTANDING RANGE, OWNER FURNISHED AND INSTALLED
6 DISHWASHER, OWNER FURNISHED AND INSTALLED
7 WALL OVEN - CONTRACTOR FURNISHED AND INSTALLED
8 REFRIGERATOR - OWNER FURNISHED AND INSTALLED
9 DOUBLE SINK - SEE PLUMBING DRAWINGS
10 MICROWAVE OVEN - OWNER FURNISHED AND INSTALLED
11 KITCHEN EXHAUST HOOD WITH FIRE EXTINGUISHING SYSTEM (APARTMENTS) - CONTRACTOR FURNISHED AND INSTALLED
12 DROP-IN RANGE, OWNER FURNISHED AND INSTALLED
13 PROVIDE METAL BLOCKING IN WALL FOR FUTURE GRAB BAR INSTALLATION – TYPICAL ALL TYPE B DWELLING UNITS
14 TRANSFER TYPE SHOWER ENCLOSURE – TYPICAL ALL HC-T UNITS
15 ROLL-IN TYPE SHOWER ENCLOSURE – TYPICAL ALL HC-R UNITS
16 WALL MOUNTED TV - NOT IN CONTRACT. CONTRACTOR TO PROVIDE 12 GA METAL WALL BLOCKING- COORDINATE WITH OWNER. SEE ELECTRICAL FOR POWER AND DATA OUTLETS
17 GARBAGE DISPOSAL - SEE PLUMBING DRAWINGS
18 TRANSFER TYPE TUB - SEE PLUMBING DRAWINGS

GENERAL NOTES ENLARGED PLANS AND INTERIOR ELEVATIONS

GENERAL NOTES

A UNLESS SPECIFICALLY NOTED OTHERWISE - INTERIOR DIMENSIONS ARE TO FACE OF STUD, FACE OF CMU OR FACE OF CONCRETE WHERE INDICATED. WHERE FACE OF FINISH OR CLEAR DIMENSIONS ARE INDICATED FOR COORDINATION PURPOSES OR TO DESIGNATE REQUIRED CODE CLEARANCES, THE DIMENSION IS TYPICALLY DESIGNATED AS "FOF" (FACE OF FINISH) OR "CLR" (CLEAR).

B CONTRACTOR RESPONSIBLE FOR FIELD MEASUREMENTS ON OVERALL DIMENSIONS.

C ROUGH-IN AND CLEARANCE DIMENSIONS, BLOCKING AND ANCHORAGE FOR SHOWER UNITS, (AS WELL AS LAUNDRY EQUIPMENT, APPLIANCES, AND SIMILAR BUILT-IN OR DIMENSIONALLY CRITICAL ITEMS) IS TO BE PROVIDED PER THE MANUFACTURER'S WRITTEN INSTALLATION INSTRUCTIONS.

D DIMENSIONS INDICATED AT SHOWER FIXTURES ARE TO FACE OF FINISH AND ARE APPROXIMATE +/-. PRIOR TO BEGINNING PARTITION LAYOUT WORK OBTAIN ACTUAL SAMPLES OF EACH PREFABRICATED SHOWER ENCLOSURE AND CONSTRUCT MOCK-UPS OF EACH TYPICAL CONDITION TO ESTABLISH EXACT ROUGH-IN DIMENSIONS AND FRAMING, BLOCKING AND FINISH DETAILS.

E SHOWER UNITS SHALL BE GROUTED SOLID UNDERNEATH - FILL VOID BETWEEN FLOOR SLAB AND FLOOR OF SHOWER.

F DWELLING UNITS DESIGNATED AS "HC" ON THE PLANS ARE UNITS WITH MOBILITY FEATURES IN ACCORDANCE WITH APPLICABLE ACCESSIBILITY CODES. ROOMS NOTED "HC-R" ARE PROVIDED WITH ROLL-IN TYPE SHOWER ENCLOSURESS. ROOMS NOTED AS "HC-T" ARE PROVIDED WITH TRANSFER TYPE SHOWER ENCLOSURES. UNITS DESIGNATED WITH "C" ARE UNITS TO BE PROVIDED WITH COMMUNICATIONS FEATURES.

G ALL DWELLING UNITS NOT DESIGNATED AS "HC" ARE TO BE CONSTRUCTED AS "TYPE B" UNITS PER CHAPTER 11 OF ICC AND APPLICABLE PROVISIONS OF ICC/ANSI A117.1 AND THE FAIR HOUSING ACT DESIGN MANUAL.

H EXCEPT AS NOTED OTHERWISE, LAUNDRY EQUIPMENT AND RESIDENTIAL APPLIANCES ARE NOT IN CONTRACT (NIC) - LAUNDRY EQUIPMENT WILL BE FURNISHED AND INSTALLED BY THE OWNER'S SEPARATE LAUNDRY CONTRACTOR (WITH THE EXCEPTION OF STAFF APARTMENT LAUNDRY EQUIPMENT). RESIDENTIAL KITCHEN EQUIPMENT (WITH THE EXCEPTION OF WALL OVENS AND RANGE HOODS) WILL BE OWNER FURNISHED AND INSTALLED. PROVIDE ROUGH-IN FOR LAUNDRY EQUIPMENT AND RESIDENTIAL KITCHEN APPLIANCES. REFER TO ELECTRICAL DRAWINGS FOR POWER AND DATA - REFER TO PLUMBING DRAWINGS FOR GAS, WATER AND DRAINAGE - REFER TO MECHANICAL DRAWING FOR EXHAUSTING AS APPLICABLE. COORDINATE ROUGH-IN REQUIREMENTS WITH THE OWNER AND OBTAIN MANUFACTURER'S

I LOCATE WHEELCHAIR ACCESSIBLE WATER CLOSETS 17" FROM CENTERLINE OF WATER CLOSET TO FACE OF FINISH AT ADJACENT WALL, TYPICAL. FLUSH HANDLES TO BE LOCATED ON THE WIDE (OPEN) SIDE OF THE FIXTURE, TYPICAL.

J PROVIDE FLOOR DRAINS (FD) AT ROLL-IN (R) AND TRANSFER (T) SHOWERS. REFER TO PLUMBING DRAWINGS, SLOPE FLOORS TO DRAIN.

K WHERE NOTED AT HANDICAP ACCESSIBLE DWELLING UNITS, PROVIDE REMOVABLE BASE CABINETS AT KITCHEN AND BATHROOM SINKS COMPLYING WITH THE REQUIREMENTS OF ADA STANDARDS FOR ACCESSIBLE DESIGN (SECTION 606.2 EXCEPTION NO. 3).

L CONTRACTOR TO PROVIDE 12 GAGE METAL BLOCKING IN STUD WALLS FOR ANCHORAGE OF WALL MOUNTED ITEMS INCLUDING BUT NOT LIMITED TO TOILET ACCESSORIES, WALL CABINETS, WALL MOUNTED TVS, SHELVING, TOILET PARTITIONS, OWNER FURNISHED EQUIPMENT INDICATED AND SIMILAR ITEMS. FOR "TYPE B" DWELLING UNITS, PROVIDE METAL BLOCKING IN WALLS FOR FUTURE INSTALLATIONS AS INDICATED. FOR WALL MOUNTED TV'S IN LOUNGES, PROVIDE METAL BLOCKING 24" ABOVE AND BELOW ELECTRICAL JUNCTION BOXES.

M REFER TO A026 FOR DESCRIPTION OF ALL PARTITION TYPES.

N REFER TO A100 (1/8" FLOOR PLANS) SERIES DRAWINGS AND A300 SERIES DRAWINGS (ENLARGED PLANS) FOR PARTITION TYPE LOCATIONS.

O REFER TO LS SERIES DRAWING (LIFE SAFETY PLANS) FOR LOCATIONS OF FIRE RATED WALLS AND PARTITIONS.

P REFER TO A000 SERIES DRAWINGS FOR WINDOW TYPES AND DOOR TYPES, SCHEDULES AND DETAILS.

Q REFER TO A000 SERIES DRAWINGS FOR INTERIOR FINISH SCHEDULES.

R REFER TO A100 SERIES DRAWINGS (ENLARGED PLANS) FOR ADDITIONAL PLAN NOTES.

S REFER TO SPECIFICATIONS SECTION 10 28 00 FOR TOILET ACCESSORY SCHEDULE

THE McCARTY COMPANY
DESIGN GROUP, P.A.
TELEPHONE: (662) 844-4400
FAX: (662) 844-0500
OFFICE ADDRESS: 533 WEST MAIN STREET TUPELO, MS 38804
MAILING ADDRESS: P.O. BOX 440 TUPELO, MS 38802

DESIGN ARCHITECT
Hanbury Evans Wright Vlattas + Company
120 Atlantic Street
Norfolk, VA 23510
757.321.9600
www.hewv.com

PROJECT TITLE
USM - CENTURY PARK SOUTH
IHL# 208-297
HATTIESBURG, MISSISSIPPI

THE UNIVERSITY OF SOUTHERN MISSISSIPPI

PROJECT NO: 2012020
DRAWN BY: RC & SLR
CHECKED BY: JTG
DATE ISSUED: 04 MAR 2013

REVISIONS & ADDENDUMS

SHEET TITLE
BUILDING A - ENLARGED PLANS - COMMON AREAS

SHEET NUMBER
A310

3/4/2013 12:26:32 PM

Plot Date: BID DOCUMENTS - 04 MARCH 2013

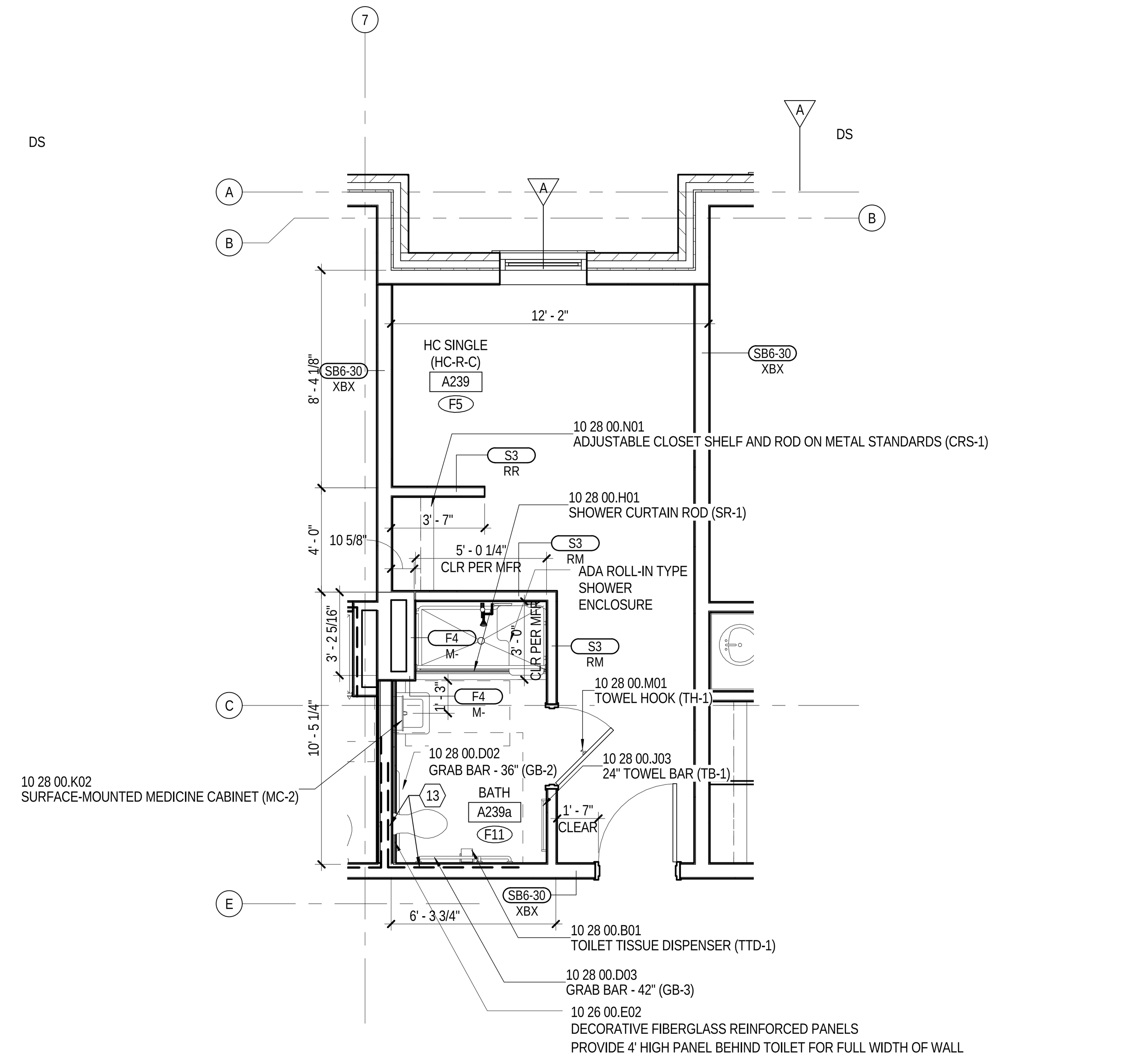

1 SINGLE ROOM - HC-R - BUILDING A

1/4" = 1'-0" A102A — HC-R UNIT OCCURS AT 2ND-5TH FLOORS

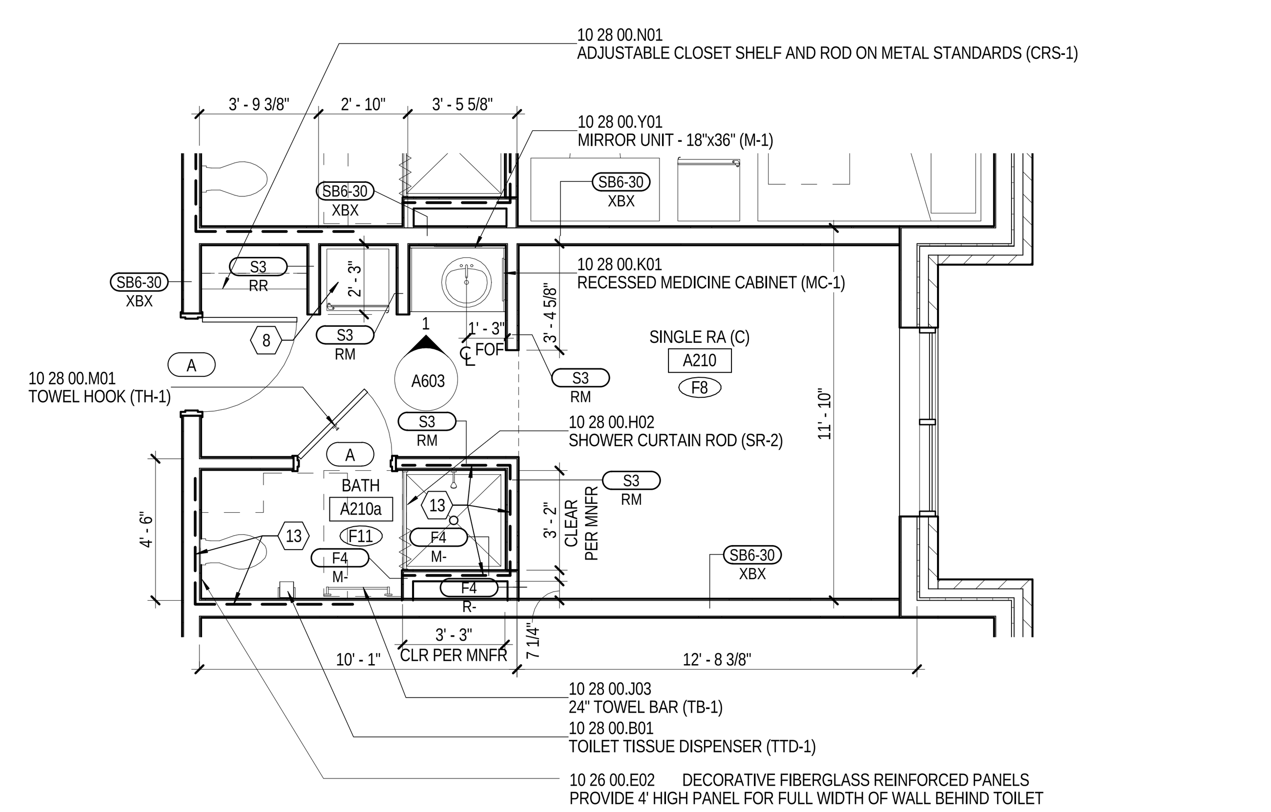

2 SINGLE ROOM - BUILDING A & B

1/4" = 1'-0" A101A

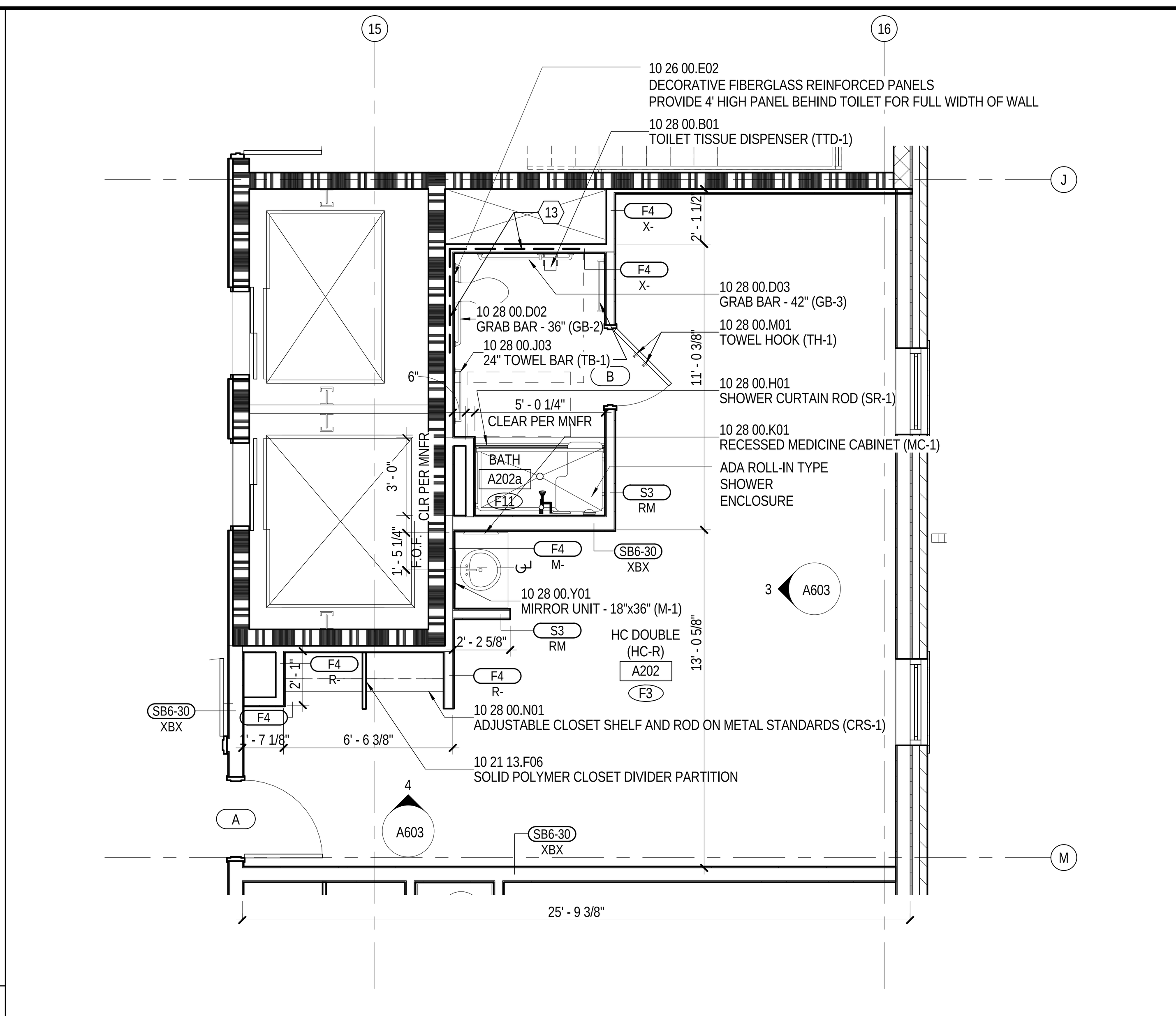

3 DOUBLE ROOM - HC-R - BUILDING A

1/4" = 1'-0" A102A — HC-R UNIT OCCURS AT 2ND FLOOR ONLY

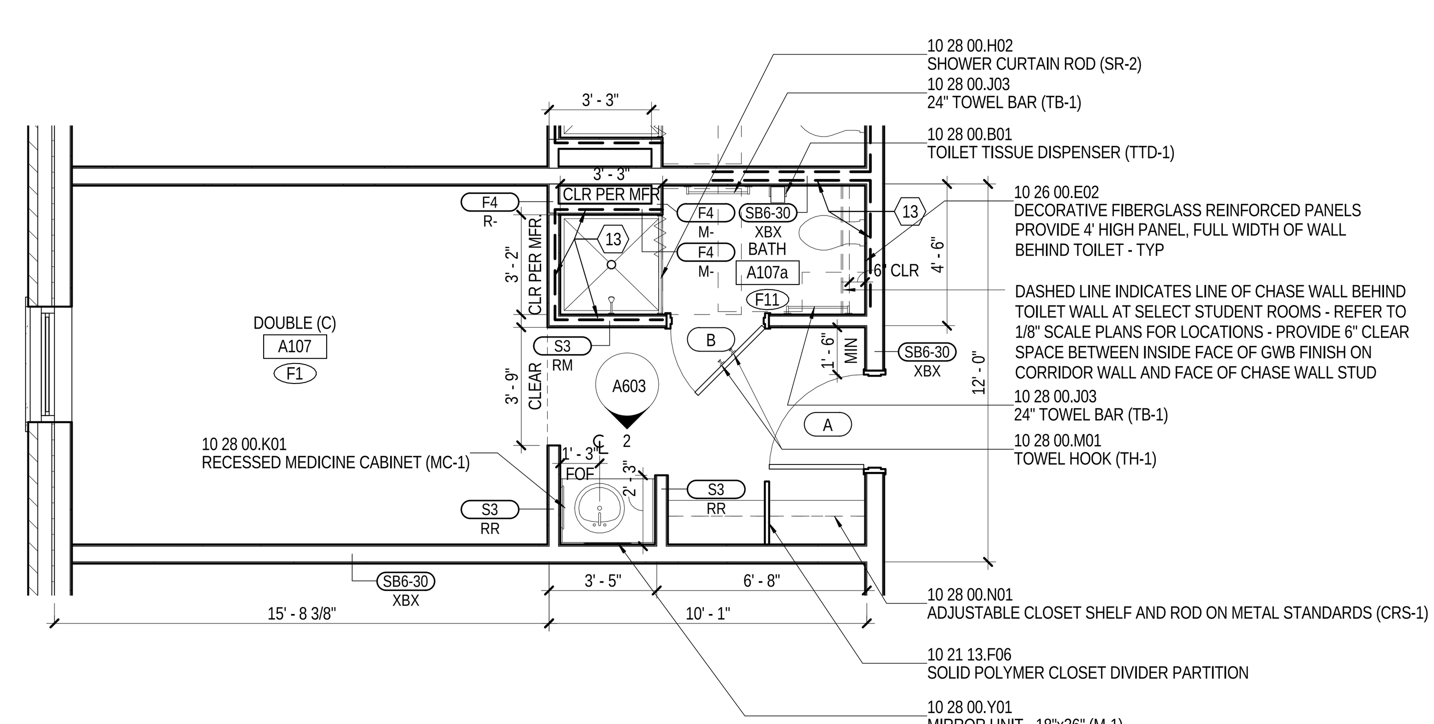

4 DOUBLE ROOM - BUILDING A & B

1/4" = 1'-0" A101A

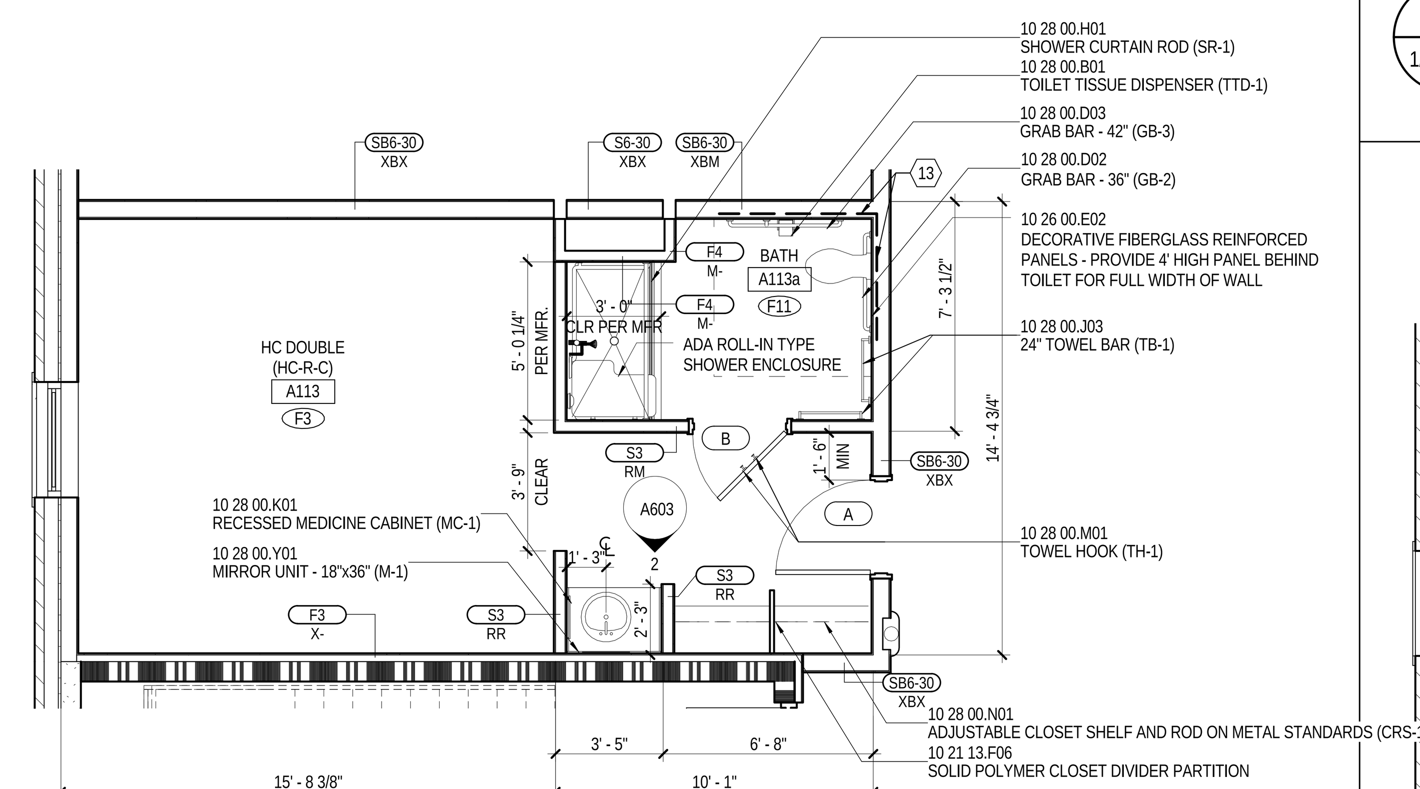

5 DOUBLE ROOM - HC-R - BUILDING A & B

1/4" = 1'-0" A101A — BLDG A & B: HC-R UNIT OCCURS AT 1ST FLOOR ONLY

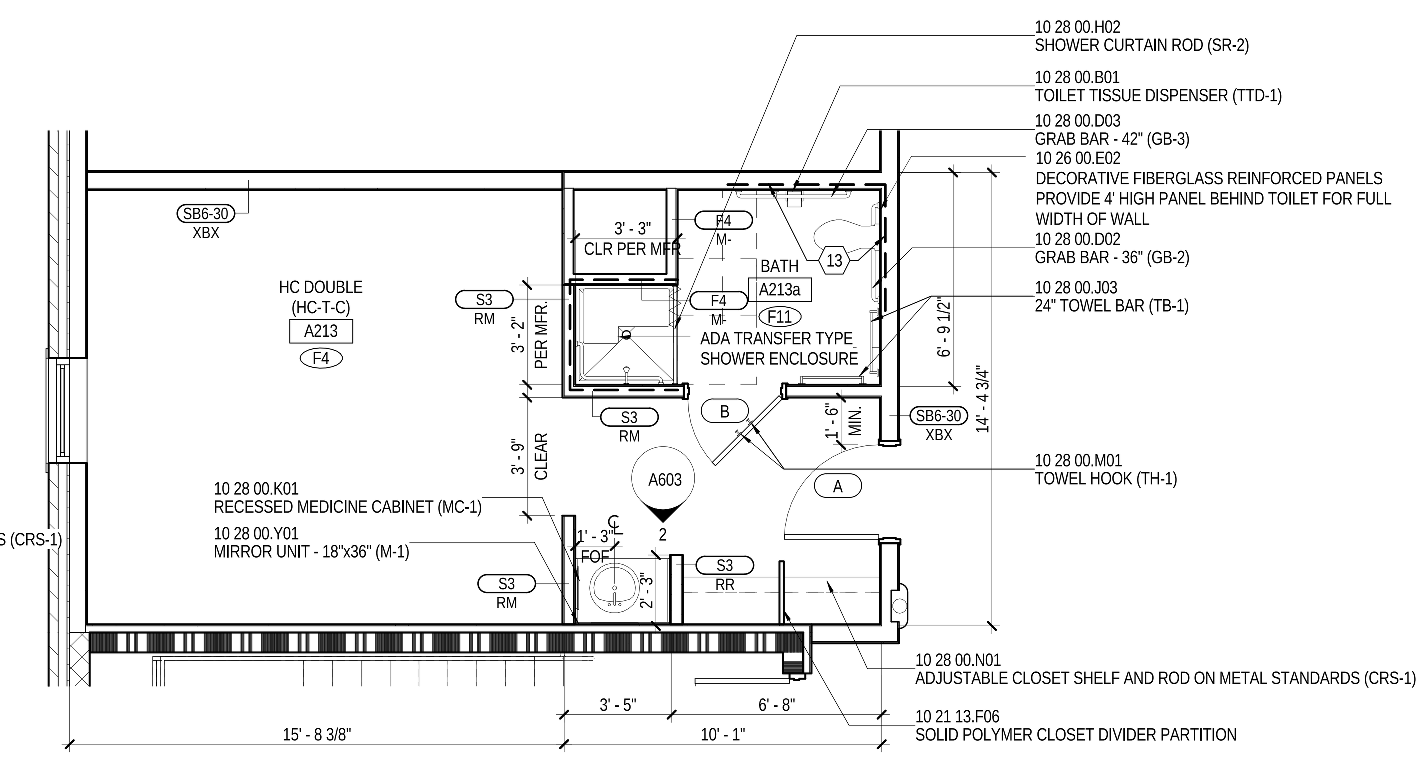

6 DOUBLE ROOM - HC-T - BUILDING A & B

1/4" = 1'-0" A102A — BLDG A & B: HC-T UNIT OCCURS AT 2ND-5TH FLOOR

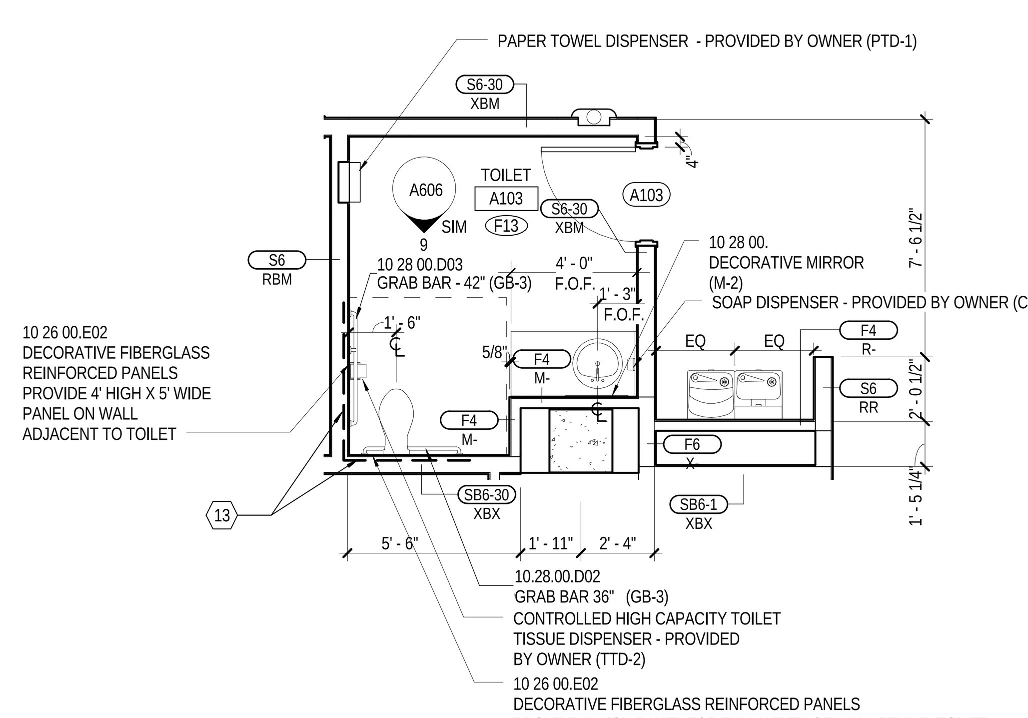

7 PUBLIC TOILET ROOM - BUILDING A

1/4" = 1'-0" A101A

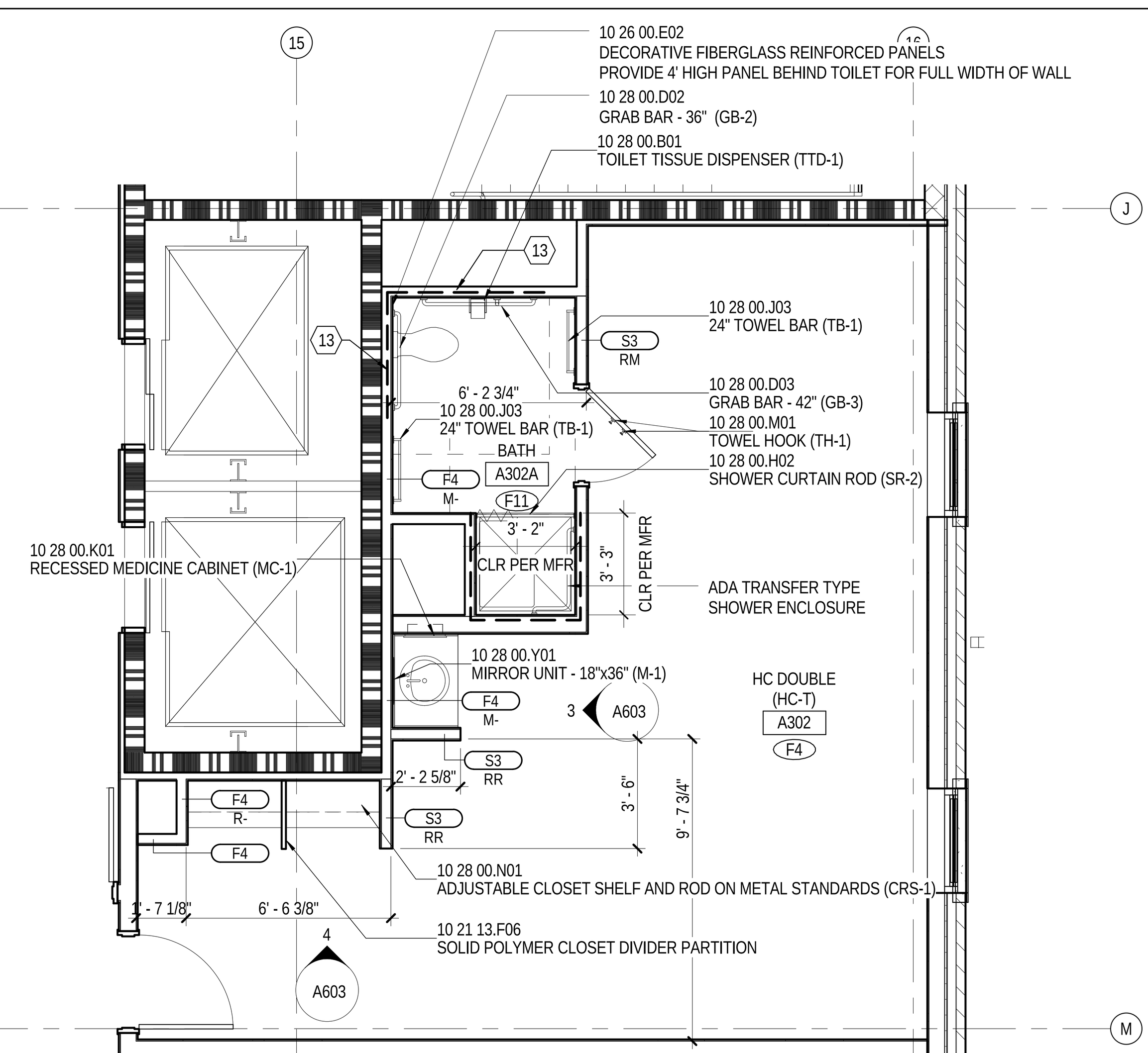

8 DOUBLE ROOM - HC-T - BUILDING A

1/4" = 1'-0" A103A — HC-T UNIT OCCURS AT 3RD-5TH FLOORS

MATERIAL KEYING

10 21 13.F06	SOLID POLYMER CLOSET DIVIDER PARTITION
10 26 00.E02	DECORATIVE FIBERGLASS REINFORCED PANELS
10 28 00.B01	TOILET TISSUE DISPENSER (TTD-1)
10 28 00.D02	GRAB BAR - 36" (GB-2)
10 28 00.D03	GRAB BAR - 42" (GB-3)
10 28 00.H01	SHOWER CURTAIN ROD (SR-1)
10 28 00.H02	SHOWER CURTAIN ROD (SR-2)
10 28 00.J03	24" TOWEL BAR (TB-1)
10 28 00.K01	RECESSED MEDICINE CABINET (MC-1)
10 28 00.K02	SURFACE-MOUNTED MEDICINE CABINET (MC-2)
10 28 00.M01	TOWEL HOOK (TH-1)
10 28 00.N01	ADJUSTABLE CLOSET SHELF AND ROD ON METAL STANDARDS (CRS-1)
10 28 00.Y01	MIRROR UNIT - 18"x36" (M-1)

NEW WORK NOTES ENLARGED PLANS AND INTERIOR ELEVATIONS

NEW WORK NOTES

1 STACKED WASHER/DRYER UNIT (W/D) NOT IN CONTRACT
2 FREESTANDING WASHER (W) NOT IN CONTRACT
3 FREESTANDING DRYER (D) NOT IN CONTRACT
4 STACKED DRYERS (S/D) NOT IN CONTRACT
5 FREESTANDING RANGE, OWNER FURNISHED AND INSTALLED
6 DISHWASHER, OWNER FURNISHED AND INSTALLED
7 WALL OVEN - CONTRACTOR FURNISHED AND INSTALLED
8 REFRIGERATOR - OWNER FURNISHED AND INSTALLED
9 DOUBLE SINK - SEE PLUMBING DRAWINGS
10 MICROWAVE OVEN - OWNER FURNISHED AND INSTALLED
11 KITCHEN EXHAUST HOOD WITH FIRE EXTINGUISHING SYSTEM (APARTMENTS) - CONTRACTOR FURNISHED AND INSTALLED
12 DROP–IN RANGE, OWNER FURNISHED AND INSTALLED
13 PROVIDE METAL BLOCKING IN WALL FOR FUTURE GRAB BAR INSTALLATION – TYPICAL ALL TYPE B DWELLING UNITS
14 TRANSFER TYPE SHOWER ENCLOSURE – TYPICAL ALL HC-T UNITS
15 ROLL-IN TYPE SHOWER ENCLOSURE – TYPICAL ALL HC-R UNITS
16 WALL MOUNTED TV - NOT IN CONTRACT. CONTRACTOR TO PROVIDE 12 GA METAL WALL BLOCKING- COORDINATE WITH OWNER. SEE ELECTRICAL FOR POWER AND DATA OUTLETS
17 GARBAGE DISPOSAL - SEE PLUMBING DRAWINGS
18 TRANSFER TYPE TUB - SEE PLUMBING DRAWINGS

GENERAL NOTES ENLARGED PLANS AND INTERIOR ELEVATIONS

GENERAL NOTES

A UNLESS SPECIFICALLY NOTED OTHERWISE - INTERIOR DIMENSIONS ARE TO FACE OF STUD, FACE OF CMU OR FACE OF CONCRETE WHERE INDICATED. WHERE FACE OF FINISH OR CLEAR DIMENSIONS ARE INDICATED FOR COORDINATION PURPOSES OR TO DESIGNATE REQUIRED CODE CLEARANCES, THE DIMENSION IS TYPICALLY DESIGNATED AS "FOF" (FACE OF FINISH) OR "CLR" (CLEAR).
B CONTRACTOR RESPONSIBLE FOR FIELD MEASUREMENTS ON OVERALL DIMENSIONS.
C ROUGH-IN AND CLEARANCE DIMENSIONS, BLOCKING AND ANCHORAGE FOR SHOWER UNITS, (AS WELL AS LAUNDRY EQUIPMENT, APPLIANCES, AND SIMILAR BUILT-IN OR DIMENSIONALLY CRITICAL ITEMS) IS TO BE PROVIDED PER THE MANUFACTURER'S WRITTEN INSTALLATION INSTRUCTIONS.
D DIMENSIONS INDICATED AT SHOWER FIXTURES ARE TO FACE OF FINSH AND ARE APPROXIMATE +/-. PRIOR TO BEGINNING PARTITION LAYOUT WORK OBTAIN ACTUAL SAMPLES OF EACH PREFABRICATED SHOWER ENCLOSURE AND CONSTRUCT MOCK-UPS OF EACH TYPICAL CONDITION TO ESTABLISH EXACT ROUGH-IN DIMENSIONS AND FRAMING, BLOCKING AND FINISH DETAILS.
E SHOWER UNITS SHALL BE GROUTED SOLID UNDERNEATH - FILL VOID BETWEEN FLOOR SLAB AND FLOOR OF SHOWER.
F DWELLING UNITS DESIGNATED AS "HC" ON THE PLANS ARE UNITS WITH MOBILITY FEATURES IN ACCORDANCE WITH APPLICABLE ACCESSIBILITY CODES. ROOMS NOTED "HC-R" ARE PROVIDED WITH ROLL-IN TYPE SHOWER ENCLOSURESS. ROOMS NOTED AS "HC-T" ARE PROVIDED WITH TRANSFER TYPE SHOWER ENCLOSURES. UNITS DESIGNATED WITH "C" ARE UNITS TO BE PROVIDED WITH COMMUNICATIONS FEATURES.
G ALL DWELLING UNITS NOT DESIGNATED AS "HC" ARE TO BE CONSTRUCTED AS "TYPE B" UNITS PER CHAPTER 11 OF ICC AND APPLICABLE PROVISIONS OF ICC/ANSI A117.1 AND THE FAIR HOUSING ACT DESIGN MANUAL.
H EXCEPT AS NOTED OTHERWISE, LAUNDRY EQUIPMENT AND RESIDENTIAL APPLIANCES ARE NOT IN CONTRACT (NIC) - LAUNDRY EQUIPMENT WILL BE FURNISHED AND INSTALLED BY THE OWNER'S SEPARATE LAUNDRY CONTRACTOR (WITH THE EXCEPTION OF STAFF APARTMENT LAUNDRY EQUIPMENT). RESIDENTIAL KITCHEN EQUIPMENT (WITH THE EXCEPTION OF WALL OVENS AND RANGE HOODS) WILL BE OWNER FURNISHED AND INSTALLED. PROVIDE ROUGH-IN FOR LAUNDRY EQUIPMENT AND RESIDENTIAL KITCHEN APPLIANCES. REFER TO ELECTRICAL DRAWINGS FOR POWER AND DATA - REFER TO PLUMBING DRAWINGS FOR GAS, WATER AND DRAINAGE - REFER TO MECHANICAL DRAWING FOR EXHAUSTING AS APPLICABLE. COORDINATE ROUGH-IN REQUIREMENTS WITH THE OWNER AND OBTAIN MANUFACTURER'S
I LOCATE WHEELCHAIR ACCESSIBLE WATER CLOSETS 17" FROM CENTERLINE OF WATER CLOSET TO FACE OF FINISH AT ADJACENT WALL, TYPICAL. FLUSH HANDLES TO BE LOCATED ON THE WIDE (OPEN) SIDE OF THE FIXTURE, TYPICAL.
J PROVIDE FLOOR DRAINS (FD) AT ROLL-IN (R) AND TRANSFER (T) SHOWERS. REFER TO PLUMBING DRAWINGS, SLOPE FLOORS TO DRAIN.
K WHERE NOTED AT HANDICAP ACCESSIBLE DWELLING UNITS, PROVIDE REMOVABLE BASE CABINETS AT KITCHEN AND BATHROOM SINKS COMPLYING WITH THE REQUIREMENTS OF ADA STANDARDS FOR ACCESSIBLE DESIGN (SECTION 606.2 EXCEPTION NO. 3).
L CONTRACTOR TO PROVIDE 12 GAGE METAL BLOCKING IN STUD WALLS FOR ANCHORAGE OF WALL MOUNTED ITEMS INCLUDING BUT NOT LIMITED TO TOILET ACCESSORIES, WALL CABINETS, WALL MOUNTED TV'S, SHELVING, TOILET PARTITIONS, OWNER FURNISHED EQUIPMENT INDICATED AND SIMILAR ITEMS. FOR "TYPE B" DWELLING UNITS, PROVIDE METAL BLOCKING IN WALLS FOR FUTURE INSTALLATIONS AS INDICATED. FOR WALL MOUNTED TV'S IN LOUNGES, PROVIDE METAL BLOCKING 24" ABOVE AND BELOW ELECTRICAL JUNCTION BOXES.
M REFER TO A026 FOR DESCRIPTION OF ALL PARTITION TYPES.
N REFER TO A100 (1/8" FLOOR PLANS) SERIES DRAWINGS AND A300 SERIES DRAWINGS (ENLARGED PLANS) FOR PARTITION TYPE LOCATIONS.
O REFER TO LS SERIES DRAWING (LIFE SAFETY PLANS) FOR LOCATIONS OF FIRE RATED WALLS AND PARTITIONS.
P REFER TO A000 SERIES DRAWINGS FOR WINDOW TYPES AND DOOR TYPES, SCHEDULES AND DETAILS.
Q REFER TO A000 SERIES DRAWINGS FOR INTERIOR FINISH SCHEDULES.
R REFER TO A100 SERIES DRAWINGS (ENLARGED PLANS) FOR ADDITIONAL PLAN NOTES.
S REFER TO SPECIFICATIONS SECTION 10 28 00 FOR TOILET ACCESSORY SCHEDULE

MICHAEL EVANS 4283 STATE OF MISSISSIPPI 04 MAR 2013

THE McCARTY COMPANY DESIGN GROUP, P.A.
MAILING ADDRESS: P.O. BOX 440 TUPELO, MS 38802
OFFICE ADDRESS: 533 WEST MAIN STREET TUPELO, MS 38804
TELEPHONE: (662) 844-4400 FAX: (662) 844-0500

DESIGN ARCHITECT
Hanbury Evans Wright Vlattas + Company
120 Atlantic Street
Norfolk, VA 23510
757.321.9600
www.hevw.com

PROJECT TITLE
USM - CENTURY PARK SOUTH
IHL# 208-297
HATTIESBURG, MISSISSIPPI

THE UNIVERSITY OF SOUTHERN MISSISSIPPI

PROJECT NO: 2012020
DRAWN BY: RMC
CHECKED BY: JTG
DATE ISSUED: 04 MAR 2013

REVISIONS & ADDENDUMS

SHEET TITLE
BUILDING A - ENLARGED PLANS - SLEEPING UNITS AND BATHS

SHEET NUMBER
A311

Plot Date: BID DOCUMENTS - 04 MARCH 2013

3/7/2013 11:39:14 AM

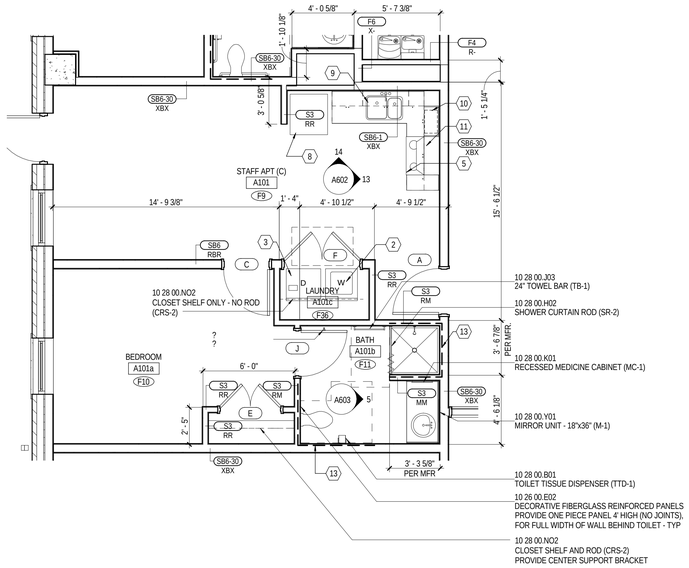

1
1/4" = 1'-0"
STAFF APARTMENT - 1 BR - BLDG A
A101A

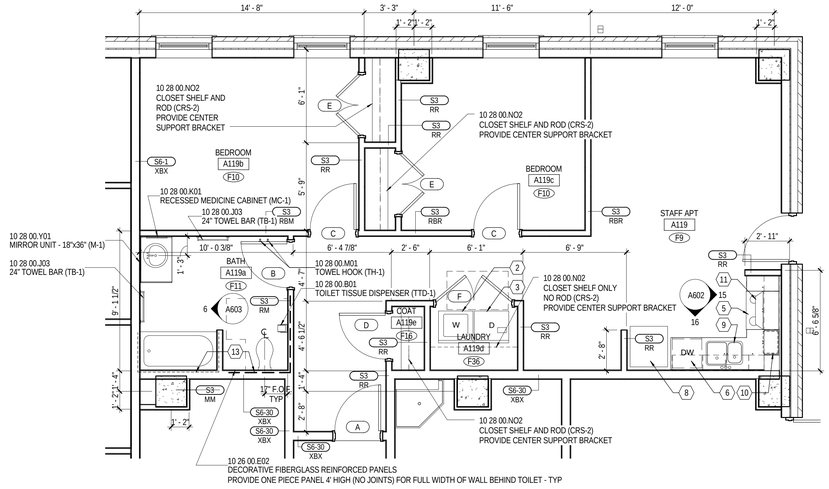

2
1/4" = 1'-0"
STAFF APARTMENT - 2 BR - BLDG A
A101A

MATERIAL KEYING

10 26 00.E02	DECORATIVE FIBERGLASS REINFORCED PANELS
10 28 00.B01	TOILET TISSUE DISPENSER (TTD-1)
10 28 00.H02	SHOWER CURTAIN ROD (SR-2)
10 28 00.J03	24" TOWEL BAR (TB-1)
10 28 00.K01	RECESSED MEDICINE CABINET (MC-1)
10 28 00.M01	TOWEL HOOK (TH-1)
10 28 00.Y01	MIRROR UNIT - 18"x36" (M-1)

NEW WORK NOTES ENLARGED PLANS AND INTERIOR ELEVATIONS

NEW WORK NOTES

1 STACKED WASHER/DRYER UNIT (W/D) NOT IN CONTRACT
2 FREESTANDING WASHER (W) NOT IN CONTRACT
3 FREESTANDING DRYER (D) NOT IN CONTRACT
4 STACKED DRYERS (S/D) NOT IN CONTRACT
5 FREESTANDING RANGE, OWNER FURNISHED AND INSTALLED
6 DISHWASHER, OWNER FURNISHED AND INSTALLED
7 WALL OVEN - CONTRACTOR FURNISHED AND INSTALLED
8 REFRIGERATOR - OWNER FURNISHED AND INSTALLED
9 DOUBLE SINK - SEE PLUMBING DRAWINGS
10 MICROWAVE OVEN - OWNER FURNISHED AND INSTALLED
11 KITCHEN EXHAUST HOOD WITH FIRE EXTINGUISHING SYSTEM (APARTMENTS) - CONTRACTOR FURNISHED AND INSTALLED
12 DROP–IN RANGE, OWNER FURNISHED AND INSTALLED
13 PROVIDE METAL BLOCKING IN WALL FOR FUTURE GRAB BAR INSTALLATION – TYPICAL ALL TYPE B DWELLING UNITS
14 TRANSFER TYPE SHOWER ENCLOSURE – TYPICAL ALL HC-T UNITS
15 ROLL-IN TYPE SHOWER ENCLOSURE – TYPICAL ALL HC-R UNITS
16 WALL MOUNTED TV - NOT IN CONTRACT. CONTRACTOR TO PROVIDE 12 GA METAL WALL BLOCKING- COORDINATE WITH OWNER. SEE ELECTRICAL FOR POWER AND DATA OUTLETS
17 GARBAGE DISPOSAL - SEE PLUMBING DRAWINGS
18 TRANSFER TYPE TUB - SEE PLUMBING DRAWINGS

GENERAL NOTES ENLARGED PLANS AND INTERIOR ELEVATIONS

GENERAL NOTES

A UNLESS SPECIFICALLY NOTED OTHERWISE - INTERIOR DIMENSIONS ARE TO FACE OF STUD, FACE OF CMU OR FACE OF CONCRETE WHERE INDICATED. WHERE FACE OF FINISH OR CLEAR DIMENSIONS ARE INDICATED FOR COORDINATION PURPOSES OR TO DESIGNATE REQUIRED CODE CLEARANCES, THE DIMENSION IS TYPICALLY DESIGNATED AS "FOF" (FACE OF FINISH) OR "CLR" (CLEAR).

B CONTRACTOR RESPONSIBLE FOR FIELD MEASUREMENTS ON OVERALL DIMENSIONS.

C ROUGH-IN AND CLEARANCE DIMENSIONS, BLOCKING AND ANCHORAGE FOR SHOWER UNITS, (AS WELL AS LAUNDRY EQUIPMENT, APPLIANCES, AND SIMILAR BUILT-IN OR DIMENSIONALLY CRITICAL ITEMS) IS TO BE PROVIDED PER THE MANUFACTURER'S WRITTEN INSTALLATION INSTRUCTIONS.

D DIMENSIONS INDICATED AT SHOWER FIXTURES ARE TO FACE OF FINSH AND ARE APPROXIMATE +/-. PRIOR TO BEGINNING PARTITION LAYOUT WORK OBTAIN ACTUAL SAMPLES OF EACH PREFABRICATED SHOWER ENCLOSURE AND CONSTRUCT MOCK-UPS OF EACH TYPICAL CONDITION TO ESTABLISH EXACT ROUGH-IN DIMENSIONS AND FRAMING, BLOCKING AND FINISH DETAILS.

E SHOWER UNITS SHALL BE GROUTED SOLID UNDERNEATH - FILL VOID BETWEEN FLOOR SLAB AND FLOOR OF SHOWER.

F DWELLING UNITS DESIGNATED AS "HC" ON THE PLANS ARE UNITS WITH MOBILITY FEATURES IN ACCORDANCE WITH APPLICABLE ACCESSIBILITY CODES. ROOMS NOTED "HC-R" ARE PROVIDED WITH ROLL-IN TYPE SHOWER ENCLOSURESS. ROOMS NOTED AS "HC-T" ARE PROVIDED WITH TRANSFER TYPE SHOWER ENCLOSURES. UNITS DESIGNATED WITH "C" ARE UNITS TO BE PROVIDED WITH COMMUNICATIONS FEATURES.

G ALL DWELLING UNITS NOT DESIGNATED AS "HC" ARE TO BE CONSTRUCTED AS "TYPE B" UNITS PER CHAPTER 11 OF ICC AND APPLICABLE PROVISIONS OF ICC/ANSI A117.1 AND THE FAIR HOUSING ACT DESIGN MANUAL.

H EXCEPT AS NOTED OTHERWISE, LAUNDRY EQUIPMENT AND RESIDENTIAL APPLIANCES ARE NOT IN CONTRACT (NIC) - LAUNDRY EQUIPMENT WILL BE FURNISHED AND INSTALLED BY THE OWNER'S SEPARATE LAUNDRY CONTRACTOR (WITH THE EXCEPTION OF STAFF APARTMENT LAUNDRY EQUIPMENT). RESIDENTIAL KITCHEN EQUIPMENT (WITH THE EXCEPTION OF WALL OVENS AND RANGE HOODS) WILL BE OWNER FURNISHED AND INSTALLED. PROVIDE ROUGH-IN FOR LAUNDRY EQUIPMENT AND RESIDENTIAL KITCHEN APPLIANCES. REFER TO ELECTRICAL DRAWINGS FOR POWER AND DATA - REFER TO PLUMBING DRAWINGS FOR GAS, WATER AND DRAINAGE - REFER TO MECHANICAL DRAWING FOR EXHAUSTING AS APPLICABLE. COORDINATE ROUGH-IN REQUIREMENTS WITH THE OWNER AND OBTAIN MANUFACTURER'S

I LOCATE WHEELCHAIR ACCESSIBLE WATER CLOSETS 17" FROM CENTERLINE OF WATER CLOSET TO FACE OF FINISH AT ADJACENT WALL, TYPICAL. FLUSH HANDLES TO BE LOCATED ON THE WIDE (OPEN) SIDE OF THE FIXTURE, TYPICAL.

J PROVIDE FLOOR DRAINS (FD) AT ROLL-IN (R) AND TRANSFER (T) SHOWERS. REFER TO PLUMBING DRAWINGS, SLOPE FLOORS TO DRAIN.

K WHERE NOTED AT HANDICAP ACCESSIBLE DWELLING UNITS, PROVIDE REMOVABLE BASE CABINETS AT KITCHEN AND BATHROOM SINKS COMPLYING WITH THE REQUIREMENTS OF ADA STANDARDS FOR ACCESSIBLE DESIGN (SECTION 606.2 EXCEPTION NO. 3).

L CONTRACTOR TO PROVIDE 12 GAGE METAL BLOCKING IN STUD WALLS FOR ANCHORAGE OF WALL MOUNTED ITEMS INCLUDING BUT NOT LIMITED TO TOILET ACCESSORIES, WALL CABINETS, WALL MOUNTED TV'S, SHELVING, TOILET PARTITIONS, OWNER FURNISHED EQUIPMENT INDICATED AND SIMILAR ITEMS. FOR "TYPE B" DWELLING UNITS, PROVIDE METAL BLOCKING IN WALLS FOR FUTURE INSTALLATIONS AS INDICATED. FOR WALL MOUNTED TV'S IN LOUNGES, PROVIDE METAL BLOCKING 24" ABOVE AND BELOW ELECTRICAL JUNCTION BOXES.

M REFER TO A026 FOR DESCRIPTION OF ALL PARTITION TYPES.

N REFER TO A100 (1/8" FLOOR PLANS) SERIES DRAWINGS AND A300 SERIES DRAWINGS (ENLARGED PLANS) FOR PARTITION TYPE LOCATIONS.

O REFER TO LS SERIES DRAWING (LIFE SAFETY PLANS) FOR LOCATIONS OF FIRE RATED WALLS AND PARTITIONS.

P REFER TO A000 SERIES DRAWINGS FOR WINDOW TYPES AND DOOR TYPES, SCHEDULES AND DETAILS.

Q REFER TO A000 SERIES DRAWINGS FOR INTERIOR FINISH SCHEDULES.

R REFER TO A100 SERIES DRAWINGS (ENLARGED PLANS) FOR ADDITIONAL PLAN NOTES.

S REFER TO SPECIFICATIONS SECTION 10 28 00 FOR TOILET ACCESSORY SCHEDULE

REGISTERED ARCHITECT MICHAEL EVANS 4283 STATE OF MISSISSIPPI
03-MAR-2013

THE McCARTY COMPANY
DESIGN GROUP, P.A.
OFFICE ADDRESS: 533 WEST MAIN STREET TUPELO, MS 38804
MAILING ADDRESS: P.O. BOX 440 TUPELO, MS 38802
TELEPHONE: (662) 844-4400
FAX: (662) 844-0503

DESIGN ARCHITECT
Hanbury Evans Wright Vlattas + Company
120 Atlantic Street
Norfolk, VA 23510
757.321.9600
www.hewv.com

PROJECT TITLE
USM - CENTURY PARK SOUTH
IHL# 208-297
HATTIESBURG, MISSISSIPPI

THE UNIVERSITY OF SOUTHERN MISSISSIPPI

PROJECT NO:
- 2012020

DRAWN BY:
- RMC

CHECKED BY:
- JTG

DATE ISSUED:
- 04 MAR 2013

REVISIONS & ADDENDUMS

SHEET TITLE
BUILDING A - ENLARGED PLANS - SLEEPING UNITS & BATHS

SHEET NUMBER
A312

3/4/2013 12:27:35 PM

Plot Date: BID DOCUMENTS - 04 MARCH 2013

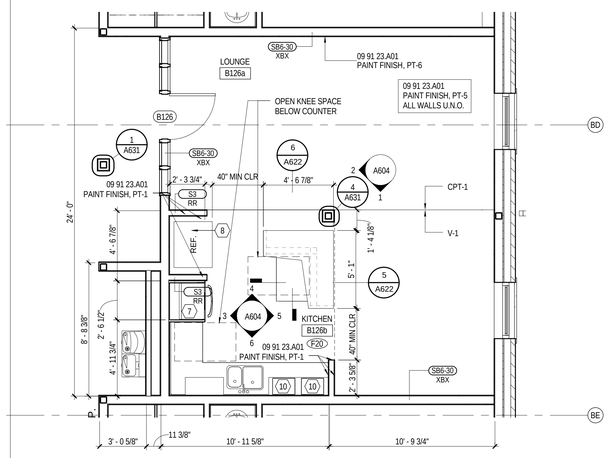

1 — 1/4" = 1'-0" — B126 KITCHEN/LOUNGE - FIRST FLOOR - BUILDING B

A101B

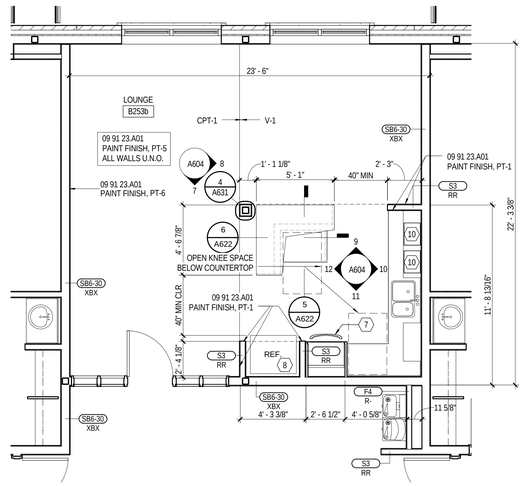

2 — 1/4" = 1'-0" — KITCHENS/LOUNGES - SECOND-FIFTH FLOOR - BUILDING B

A102B

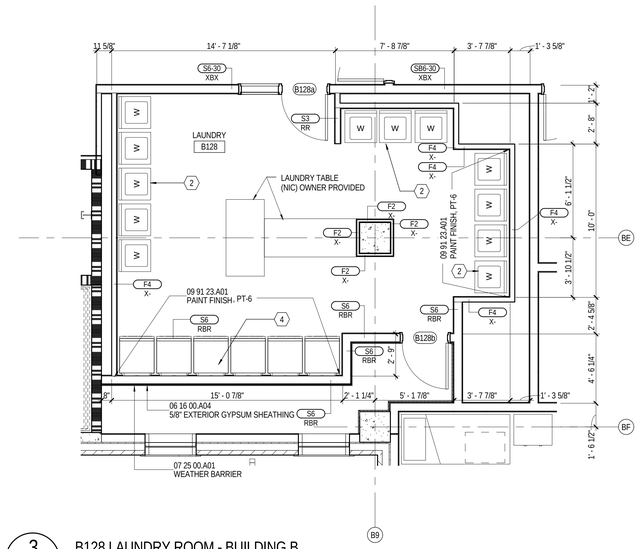

3 — 1/4" = 1'-0" — B128 LAUNDRY ROOM - BUILDING B

A101B

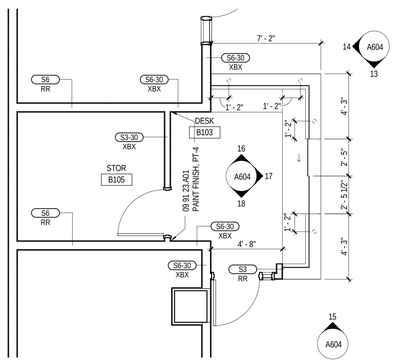

4 — 1/4" = 1'-0" — B103 FRONT DESK - BUILDING B

A101B

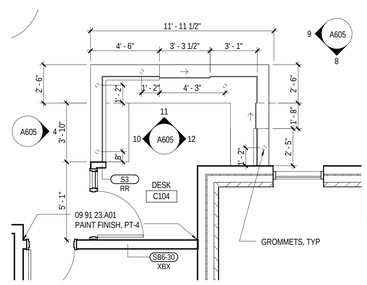

5 — 1/4" = 1'-0" — C104 FRONT DESK - BUILDING C

A101B

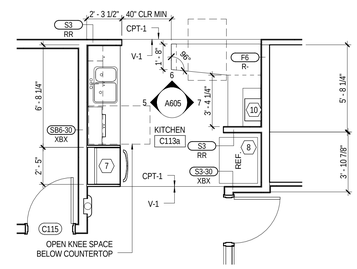

6 — 1/4" = 1'-0" — C113A KITCHEN - BUILDING C

A101B

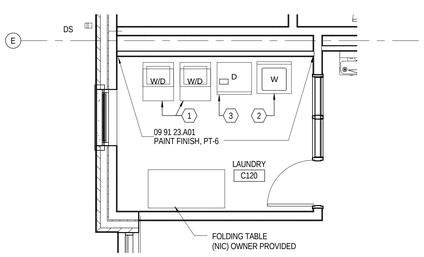

7 — 1/4" = 1'-0" — LAUNDRY ROOMS - 1ST-5TH FLOORS - BUILDING C

A101B

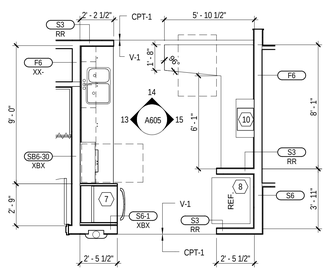

8 — 1/4" = 1'-0" — C213A, C313A, C413A, C513A KITCHENS - BUILDING C

A102B

MATERIAL KEYING

06 16 00.A04	5/8" EXTERIOR GYPSUM SHEATHING
07 25 00.A01	WEATHER BARRIER
09 91 23.A01	PAINT FINISH

NEW WORK PLAN NOTES ENLARGED PLANS AND INTERIOR ELEVATIONS

NEW WORK NOTES

1 STACKED WASHER/DRYER UNIT (W/D) NOT IN CONTRACT
2 FREESTANDING WASHER (W) NOT IN CONTRACT
3 FREESTANDING DRYER (D) NOT IN CONTRACT
4 STACKED DRYERS (S/D) NOT IN CONTRACT
5 FREESTANDING RANGE, OWNER FURNISHED AND INSTALLED
6 DISHWASHER, OWNER FURNISHED AND INSTALLED
7 WALL OVEN - CONTRACTOR FURNISHED AND INSTALLED
8 REFRIGERATOR - OWNER FURNISHED AND INSTALLED
9 DOUBLE SINK - SEE PLUMBING DRAWINGS
10 MICROWAVE OVEN - OWNER FURNISHED AND INSTALLED
11 KITCHEN EXHAUST HOOD WITH FIRE EXTINGUISHING SYSTEM (APARTMENTS) - CONTRACTOR FURNISHED AND INSTALLED
12 DROP-IN RANGE, OWNER FURNISHED AND INSTALLED
13 PROVIDE METAL BLOCKING IN WALL FOR FUTURE GRAB BAR INSTALLATION – TYPICAL ALL TYPE B DWELLING UNITS
14 TRANSFER TYPE SHOWER ENCLOSURE – TYPICAL ALL HC-T UNITS
15 ROLL-IN TYPE SHOWER ENCLOSURE – TYPICAL ALL HC-R UNITS
16 WALL MOUNTED TV - NOT IN CONTRACT. CONTRACTOR TO PROVIDE 12 GA METAL WALL BLOCKING- COORDINATE WITH OWNER. SEE ELECTRICAL FOR POWER AND DATA OUTLETS
17 GARBAGE DISPOSAL - SEE PLUMBING DRAWINGS
18 TRANSFER TYPE TUB - SEE PLUMBING DRAWINGS

GENERAL NOTES ENLARGED PLANS AND INTERIOR ELEVATIONS

GENERAL NOTES

A UNLESS SPECIFICALLY NOTED OTHERWISE - INTERIOR DIMENSIONS ARE TO FACE OF STUD, FACE OF CMU OR FACE OF CONCRETE WHERE INDICATED. WHERE FACE OF FINISH OR CLEAR DIMENSIONS ARE INDICATED FOR COORDINATION PURPOSES OR TO DESIGNATE REQUIRED CODE CLEARANCES, THE DIMENSION IS TYPICALLY DESIGNATED AS "FOF" (FACE OF FINISH) OR "CLR" (CLEAR).

B CONTRACTOR RESPONSIBLE FOR FIELD MEASUREMENTS ON OVERALL DIMENSIONS.

C ROUGH-IN AND CLEARANCE DIMENSIONS, BLOCKING AND ANCHORAGE FOR SHOWER UNITS, (AS WELL AS LAUNDRY EQUIPMENT, APPLIANCES, AND SIMILAR BUILT-IN OR DIMENSIONALLY CRITICAL ITEMS) IS TO BE PROVIDED PER THE MANUFACTURER'S WRITTEN INSTALLATION INSTRUCTIONS.

D DIMENSIONS INDICATED AT SHOWER FIXTURES ARE TO FACE OF FINISH AND APPROXIMATE +/-. PRIOR TO BEGINNING PARTITION LAYOUT WORK OBTAIN ACTUAL SAMPLES OF EACH PREFABRICATED SHOWER ENCLOSURE AND CONSTRUCT MOCK-UPS OF EACH TYPICAL CONDITION TO ESTABLISH EXACT ROUGH-IN DIMENSIONS AND FRAMING, BLOCKING AND FINISH DETAILS.

E SHOWER UNITS SHALL BE GROUTED SOLID UNDERNEATH - FILL VOID BETWEEN FLOOR SLAB AND FLOOR OF SHOWER.

F DWELLING UNITS DESIGNATED AS "HC" ON THE PLANS ARE UNITS WITH MOBILITY FEATURES IN ACCORDANCE WITH APPLICABLE ACCESSIBILITY CODES. ROOMS NOTED "HC-R" ARE PROVIDED WITH ROLL-IN TYPE SHOWER ENCLOSURESS. ROOMS NOTED AS "HC-T" ARE PROVIDED WITH TRANSFER TYPE SHOWER ENCLOSURES. UNITS DESIGNATED WITH "C" ARE UNITS TO BE PROVIDED WITH COMMUNICATIONS FEATURES.

G ALL DWELLING UNITS NOT DESIGNATED AS "HC" ARE TO BE CONSTRUCTIED AS "TYPE B" UNITS PER CHAPTER 11 OF ICC AND APPLICABLE PROVISIONS OF ICC/ANSI A117.1 AND THE FAIR HOUSING ACT DESIGN MANUAL.

H EXCEPT AS NOTED OTHERWISE, LAUNDRY EQUIPMENT AND RESIDENTIAL APPLIANCES ARE NOT IN CONTRACT (NIC) - LAUNDRY EQUIPMENT WILL BE FURNISHED AND INSTALLED BY THE OWNER'S SEPARATE LAUNDRY CONTRACTOR (WITH THE EXCEPTION OF STAFF APARTMENT LAUNDRY EQUIPMENT). RESIDENTIAL KITCHEN EQUIPMENT (WITH THE EXCEPTION OF WALL OVENS AND RANGE HOODS) WILL BE OWNER FURNISHED AND INSTALLED. PROVIDE ROUGH-IN FOR LAUNDRY EQUIPMENT AND RESIDENTIAL KITCHEN APPLIANCES. REFER TO ELECTRICAL DRAWINGS FOR POWER AND DATA - REFER TO PLUMBING DRAWINGS FOR GAS, WATER AND DRAINAGE - REFER TO MECHANICAL DRAWING FOR EXHAUSTING AS APPLICABLE. COORDINATE ROUGH-IN REQUIREMENTS WITH THE OWNER AND OBTAIN MANUFACTURER'S

I LOCATE WHEELCHAIR ACCESSIBLE WATER CLOSETS 17" FROM CENTERLINE OF WATER CLOSET TO FACE OF FINISH AT ADJACENT WALL, TYPICAL. FLUSH HANDLES TO BE LOCATED ON THE WIDE (OPEN) SIDE OF THE FIXTURE, TYPICAL.

J PROVIDE FLOOR DRAINS (FD) AT ROLL-IN (R) AND TRANSFER (T) SHOWERS. REFER TO PLUMBING DRAWINGS, SLOPE FLOORS TO DRAIN.

K WHERE NOTED AT HANDICAP ACCESSIBLE DWELLING UNITS, PROVIDE REMOVABLE BASE CABINETS AT KITCHEN AND BATHROOM SINKS COMPLYING WITH THE REQUIREMENTS OF ADA STANDARDS FOR ACCESSIBLE DESIGN (SECTION 606.2 EXCEPTION NO. 3).

L CONTRACTOR TO PROVIDE 12 GAGE METAL BLOCKING IN STUD WALLS FOR ANCHORAGE OF WALL MOUNTED ITEMS INCLUDING BUT NOT LIMITED TO TOILET ACCESSORIES, WALL CABINETS, WALL MOUNTED TV'S, SHELVING, TOILET PARTITIONS, OWNER FURNISHED EQUIPMENT INDICATED AND SIMILAR ITEMS. FOR "TYPE B" DWELLING UNITS, PROVIDE METAL BLOCKING IN WALLS FOR FUTURE INSTALLATIONS AS INDICATED. FOR WALL MOUNTED TV'S IN LOUNGES, PROVIDE METAL BLOCKING 24" ABOVE AND BELOW ELECTRICAL JUNCTION BOXES.

M REFER TO A026 FOR DESCRIPTION OF ALL PARTITION TYPES.

N REFER TO A100 (1/8" FLOOR PLANS) SERIES DRAWINGS AND A300 SERIES DRAWINGS (ENLARGED PLANS) FOR PARTITION TYPE LOCATIONS.

O REFER TO LS SERIES DRAWING (LIFE SAFETY PLANS) FOR LOCATIONS OF FIRE RATED WALLS AND PARTITIONS.

P REFER TO A000 SERIES DRAWINGS FOR WINDOW TYPES AND DOOR TYPES, SCHEDULES AND DETAILS.

Q REFER TO A000 SERIES DRAWINGS FOR INTERIOR FINISH SCHEDULES.

R REFER TO A100 SERIES DRAWINGS (ENLARGED PLANS) FOR ADDITIONAL PLAN NOTES.

S REFER TO SPECIFICATIONS SECTION 10 28 00 FOR TOILET ACCESSORY SCHEDULE

THE McCARTY COMPANY
DESIGN GROUP, P.A.
TELEPHONE: (662) 844-4400
FAX: (662) 844-0500
OFFICE ADDRESS: 533 WEST MAIN STREET TUPELO, MS 38804
MAILING ADDRESS: P.O. BOX 440 TUPELO, MS 38802

DESIGN ARCHITECT
Hanbury Evans Wright Vlattas + Company
120 Atlantic Street
Norfolk, VA 23510
757.321.9600
www.hewv.com

PROJECT TITLE
USM - CENTURY PARK SOUTH
IHL# 208-297
HATTIESBURG, MS

THE UNIVERSITY OF SOUTHERN MISSISSIPPI

PROJECT NO: 2012020
DRAWN BY: SLR & RMC
CHECKED BY: JTG
DATE ISSUED: 04 MAR 2013

REVISIONS & ADDENDUMS

SHEET TITLE
BUILDING B & C - ENLARGED PLANS - COMMON LIVING AREAS

SHEET NUMBER
A313

3/4/2013 12:31:33 PM

Plot Date: BID DOCUMENTS - 04 MARCH 2013

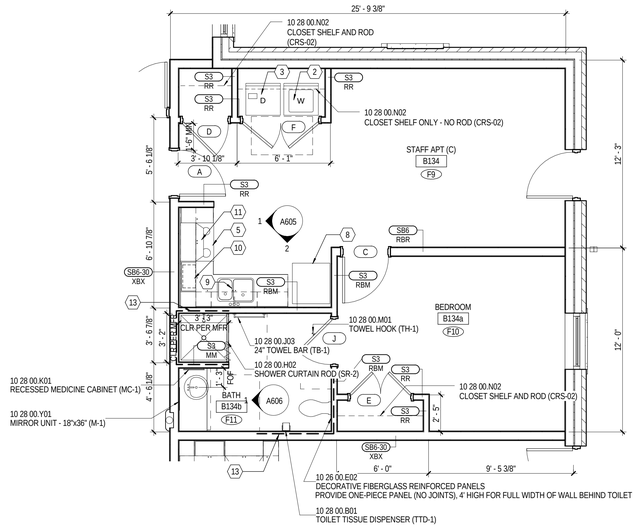

1 — STAFF APARTMENT - 1 BR - BUILDING B

1/4" = 1'-0" A101B

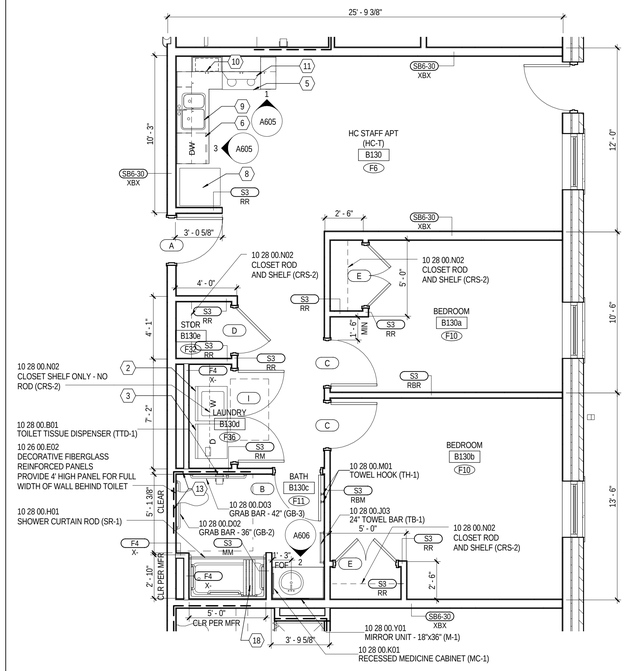

2 — STAFF APARTMENT - 2 BR - HC-T - BUILDING B

1/4" = 1'-0" A101B

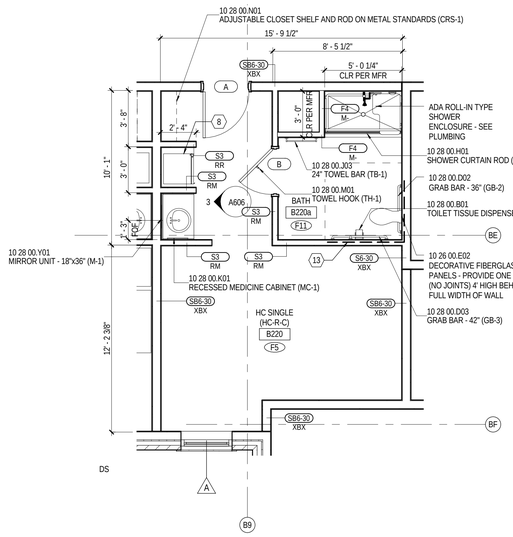

3 — SINGLE ROOM - HC-R - BUILDING B

1/4" = 1'-0" A102B

NOTE: HC-R UNIT OCCURS AT 2ND-3RD FLOORS ONLY

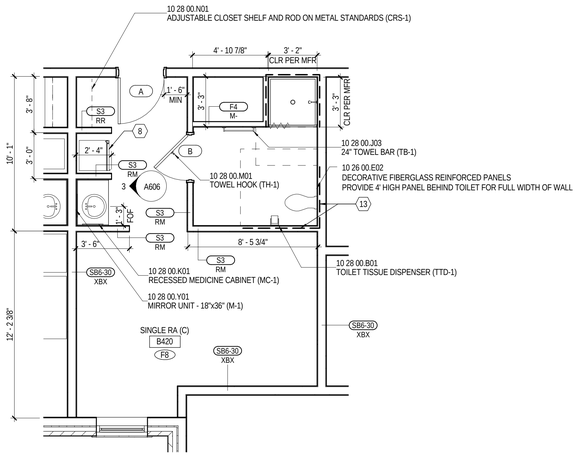

4 — SINGLE ROOM - BUILDING B

1/4" = 1'-0" A102B

NOTE: NON-HC TYPE B UNIT OCCURS AT 4TH-5TH FLOOR ONLY

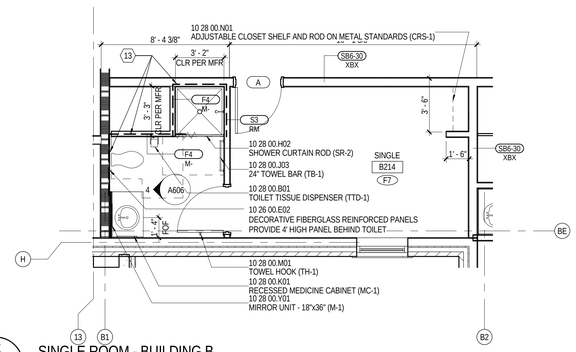

5 — SINGLE ROOM - BUILDING B

1/4" = 1'-0" A102B

MATERIAL KEYING

10 26 00.E02	DECORATIVE FIBERGLASS REINFORCED PANELS
10 28 00.B01	TOILET TISSUE DISPENSER (TTD-1)
10 28 00.D02	GRAB BAR - 36" (GB-2)
10 28 00.D03	GRAB BAR - 42" (GB-3)
10 28 00.H01	SHOWER CURTAIN ROD (SR-1)
10 28 00.H02	SHOWER CURTAIN ROD (SR-2)
10 28 00..J03	24" TOWEL BAR (TB-1)
10 28 00.K01	RECESSED MEDICINE CABINET (MC-1)
10 28 00.M01	TOWEL HOOK (TH-1)
10 28 00.N01	ADJUSTABLE CLOSET SHELF AND ROD ON METAL STANDARDS (CRS-1)
10 28 00.Y01	MIRROR UNIT - 18"x36" (M-1)

NEW WORK PLAN NOTES ENLARGED PLANS AND INTERIOR ELEVATIONS

NEW WORK NOTES

1 STACKED WASHER/DRYER UNIT (W/D) NOT IN CONTRACT
2 FREESTANDING WASHER (W) NOT IN CONTRACT
3 FREESTANDING DRYER (D) NOT IN CONTRACT
4 STACKED DRYERS (S/D) NOT IN CONTRACT
5 FREESTANDING RANGE, OWNER FURNISHED AND INSTALLED
6 DISHWASHER, OWNER FURNISHED AND INSTALLED
7 WALL OVEN - CONTRACTOR FURNISHED AND INSTALLED
8 REFRIGERATOR - OWNER FURNISHED AND INSTALLED
9 DOUBLE SINK - SEE PLUMBING DRAWINGS
10 MICROWAVE OVEN - OWNER FURNISHED AND INSTALLED
11 KITCHEN EXHAUST HOOD WITH FIRE EXTINGUISHING SYSTEM (APARTMENTS) - CONTRACTOR FURNISHED AND INSTALLED
12 DROP-IN RANGE, OWNER FURNISHED AND INSTALLED
13 PROVIDE METAL BLOCKING IN WALL FOR FUTURE GRAB BAR INSTALLATION – TYPICAL ALL TYPE B DWELLING UNITS
14 TRANSFER TYPE SHOWER ENCLOSURE – TYPICAL ALL HC-T UNITS
15 ROLL-IN TYPE SHOWER ENCLOSURE – TYPICAL ALL HC-R UNITS
16 WALL MOUNTED TV - NOT IN CONTRACT. CONTRACTOR TO PROVIDE 12 GA METAL WALL BLOCKING- COORDINATE WITH OWNER. SEE ELECTRICAL FOR POWER AND DATA OUTLETS
17 GARBAGE DISPOSAL - SEE PLUMBING DRAWINGS
18 TRANSFER TYPE TUB - SEE PLUMBING DRAWINGS

GENERAL NOTES ENLARGED PLANS AND INTERIOR ELEVATIONS

GENERAL NOTES

A UNLESS SPECIFICALLY NOTED OTHERWISE - INTERIOR DIMENSIONS ARE TO FACE OF STUD, FACE OF CMU OR FACE OF CONCRETE WHERE INDICATED. WHERE FACE OF FINISH OR CLEAR DIMENSIONS ARE INDICATED FOR COORDINATION PURPOSES OR TO DESIGNATE REQUIRED CODE CLEARANCES, THE DIMENSION IS TYPICALLY DESIGNATED AS "FOF" (FACE OF FINISH) OR "CLR" (CLEAR).

B CONTRACTOR RESPONSIBLE FOR FIELD MEASUREMENTS ON OVERALL DIMENSIONS.

C ROUGH-IN AND CLEARANCE DIMENSIONS, BLOCKING AND ANCHORAGE FOR SHOWER UNITS, (AS WELL AS LAUNDRY EQUIPMENT, APPLIANCES, AND SIMILAR BUILT-IN OR DIMENSIONALLY CRITICAL ITEMS) IS TO BE PROVIDED PER THE MANUFACTURER'S WRITTEN INSTALLATION INSTRUCTIONS.

D DIMENSIONS INDICATED AT SHOWER FIXTURES ARE TO FACE OF FINISH AND APPROXIMATE +/-. PRIOR TO BEGINNING PARTITION LAYOUT WORK OBTAIN ACTUAL SAMPLES OF EACH PREFABRICATED SHOWER ENCLOSURE AND CONSTRUCT MOCK-UPS OF EACH TYPICAL CONDITION TO ESTABLISH EXACT ROUGH-IN DIMENSIONS AND FRAMING, BLOCKING AND FINISH DETAILS.

E SHOWER UNITS SHALL BE GROUTED SOLID UNDERNEATH - FILL VOID BETWEEN FLOOR SLAB AND FLOOR OF SHOWER.

F DWELLING UNITS DESIGNATED AS "HC" ON THE PLANS ARE UNITS WITH MOBILITY FEATURES IN ACCORDANCE WITH APPLICABLE ACCESSIBILITY CODES. ROOMS NOTED "HC-R" ARE PROVIDED WITH ROLL-IN TYPE SHOWER ENCLOSURESS. ROOMS NOTED AS "HC-T" ARE PROVIDED WITH TRANSFER TYPE SHOWER ENCLOSURES. UNITS DESIGNATED WITH "C" ARE UNITS TO BE PROVIDED WITH COMMUNICATIONS FEATURES.

G ALL DWELLING UNITS NOT DESIGNATED AS "HC" ARE TO BE CONSTRUCTED AS "TYPE B" UNITS PER CHAPTER 11 OF ICC AND APPLICABLE PROVISIONS OF ICC/ANSI A117.1 AND THE FAIR HOUSING ACT DESIGN MANUAL.

H EXCEPT AS NOTED OTHERWISE, LAUNDRY EQUIPMENT AND RESIDENTIAL APPLIANCES ARE NOT IN CONTRACT (NIC) - LAUNDRY EQUIPMENT WILL BE FURNISHED AND INSTALLED BY THE OWNER'S SEPARATE LAUNDRY CONTRACTOR (WITH THE EXCEPTION OF STAFF APARTMENT LAUNDRY EQUIPMENT). RESIDENTIAL KITCHEN EQUIPMENT (WITH THE EXCEPTION OF WALL OVENS AND RANGE HOODS) WILL BE OWNER FURNISHED AND INSTALLED. PROVIDE ROUGH-IN FOR LAUNDRY EQUIPMENT AND RESIDENTIAL KITCHEN APPLIANCES. REFER TO ELECTRICAL DRAWINGS FOR POWER AND DATA - REFER TO PLUMBING DRAWINGS FOR GAS, WATER AND DRAINAGE - REFER TO MECHANICAL DRAWING FOR EXHAUSTING AS APPLICABLE. COORDINATE ROUGH-IN REQUIREMENTS WITH THE OWNER AND OBTAIN MANUFACTURER'S

I LOCATE WHEELCHAIR ACCESSIBLE WATER CLOSETS 17" FROM CENTERLINE OF WATER CLOSET TO FACE OF FINISH AT ADJACENT WALL, TYPICAL. FLUSH HANDLES TO BE LOCATED ON THE WIDE (OPEN) SIDE OF THE FIXTURE, TYPICAL.

J PROVIDE FLOOR DRAINS (FD) AT ROLL-IN (R) AND TRANSFER (T) SHOWERS. REFER TO PLUMBING DRAWINGS, SLOPE FLOORS TO DRAIN.

K WHERE NOTED AT HANDICAP ACCESSIBLE DWELLING UNITS, PROVIDE REMOVABLE BASE CABINETS AT KITCHEN AND BATHROOM SINKS COMPLYING WITH THE REQUIREMENTS OF ADA STANDARDS FOR ACCESSIBLE DESIGN (SECTION 606.2 EXCEPTION NO. 3).

L CONTRACTOR TO PROVIDE 12 GAGE METAL BLOCKING IN STUD WALLS FOR ANCHORAGE OF WALL MOUNTED ITEMS INCLUDING BUT NOT LIMITED TO TOILET ACCESSORIES, WALL CABINETS, WALL MOUNTED TV'S, SHELVING, TOILET PARTITIONS, OWNER FURNISHED EQUIPMENT INDICATED AND SIMILAR ITEMS. FOR "TYPE B" DWELLING UNITS, PROVIDE METAL BLOCKING IN WALLS FOR FUTURE INSTALLATIONS AS INDICATED. FOR WALL MOUNTED TVS IN LOUNGES, PROVIDE METAL BLOCKING 24" ABOVE AND BELOW ELECTRICAL JUNCTION BOXES.

M REFER TO A026 FOR DESCRIPTION OF ALL PARTITION TYPES.

N REFER TO A100 (1/8" FLOOR PLANS) SERIES DRAWINGS AND A300 SERIES DRAWINGS (ENLARGED PLANS) FOR PARTITION TYPE LOCATIONS.

O REFER TO LS SERIES DRAWING (LIFE SAFETY PLANS) FOR LOCATIONS OF FIRE RATED WALLS AND PARTITIONS.

P REFER TO A000 SERIES DRAWINGS FOR WINDOW TYPES AND DOOR TYPES, SCHEDULES AND DETAILS.

Q REFER TO A000 SERIES DRAWINGS FOR INTERIOR FINISH SCHEDULES.

R REFER TO A100 SERIES DRAWINGS (ENLARGED PLANS) FOR ADDITIONAL PLAN NOTES.

S REFER TO SPECIFICATIONS SECTION 10 28 00 FOR TOILET ACCESSORY SCHEDULE

THE McCARTY COMPANY
DESIGN GROUP, P.A.
TELEPHONE: (662) 844-4400
FAX: (662) 844-0500
OFFICE ADDRESS: 533 WEST MAIN STREET TUPELO, MS 38804
MAILING ADDRESS: P.O. BOX 440 TUPELO, MS 38802

DESIGN ARCHITECT:
Hanbury Evans Wright Vlattas + Company
120 Atlantic Street
Norfolk, VA 23510
757.321.9600
www.hewv.com

PROJECT TITLE
USM - CENTURY PARK SOUTH
IHL# 208-297
HATTIESBURG, MS

THE UNIVERSITY OF SOUTHERN MISSISSIPPI

PROJECT NO: • 2012020
DRAWN BY: • RMC
CHECKED BY: • JTG
DATE ISSUED: • 04 MAR 2013

REVISIONS & ADDENDUMS

SHEET TITLE
BUILDING B - ENLARGED PLANS - SLEEPING UNITS & BATHS

SHEET NUMBER
A314

3/4/2013 12:31:41 PM

Plot Date: BID DOCUMENTS - 04 MARCH 2013

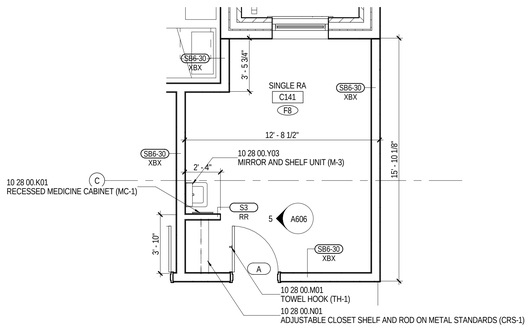

1 — SINGLE ROOM - BUILDING C
1/4" = 1'-0"
A101B

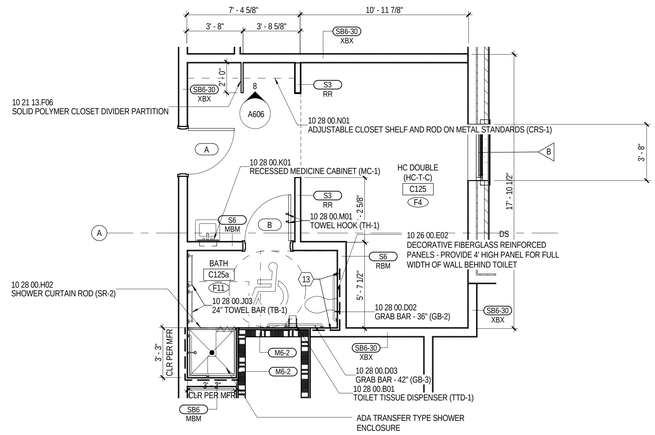

2 — DOUBLE ROOM - HC-T - BUILDING C
1/4" = 1'-0"
A101B

NOTE: HC-T UNIT IN BUILDING C OCCURS AT 1ST FLOOR ONLY

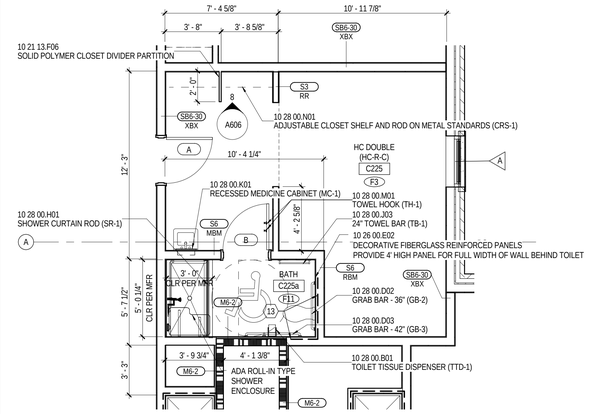

3 — DOUBLE ROOM - HC-R - BUILDING C
1/4" = 1'-0"
A102B

NOTE: HC-R UNIT IN BUILDING C OCCURS AT 2ND-5TH FLOORS

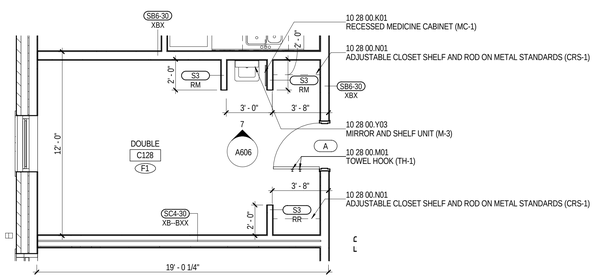

4 — DOUBLE ROOM - BUILDING C
1/4" = 1'-0"
A101B

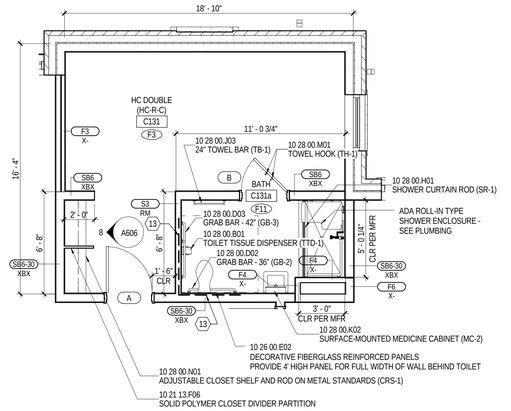

5 — DOUBLE ROOM - HC-R - BUILDING C
1/4" = 1'-0"
A101B

NOTE: HC-R UNIT IN BUILDING C OCCURS AT 1ST FLOOR ONLY

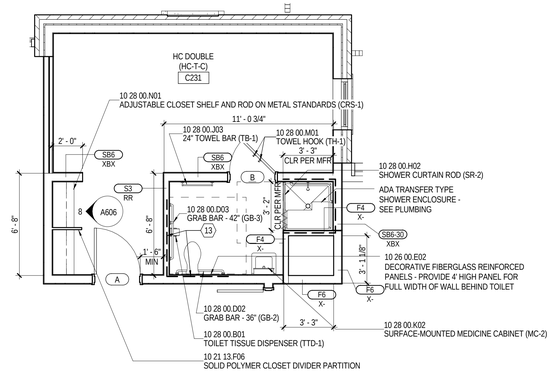

6 — DOUBLE ROOM - HC-T - BUILDING C
1/4" = 1'-0"
A102B

NOTE: HC-T UNITS IN BUILDING C OCCUR AT 2ND-5TH FLOORS ONLY

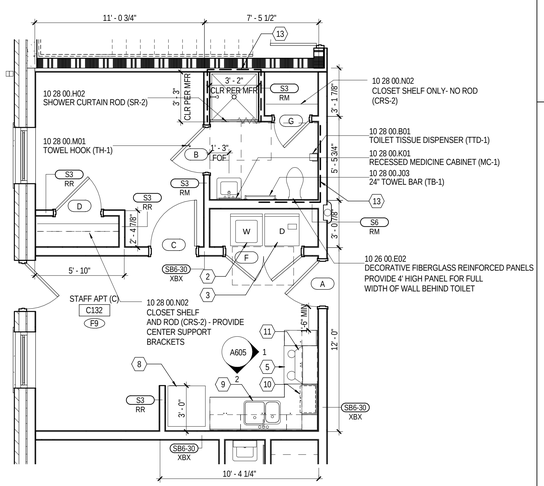

7 — STAFF APARTMENT - 1 BR - BLDG C
1/4" = 1'-0"
A101B

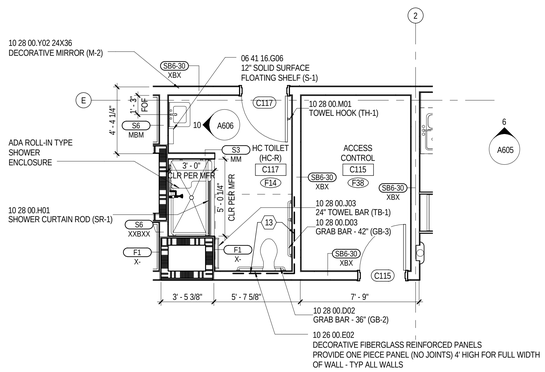

8 — STUDENT TOILET ROOM - HC-R - BUILDING C
1/4" = 1'-0"
A101B

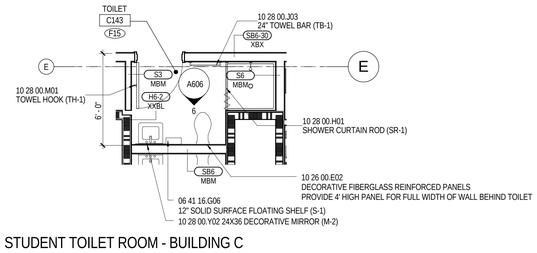

9 — STUDENT TOILET ROOM - BUILDING C
1/4" = 1'-0"
A101B

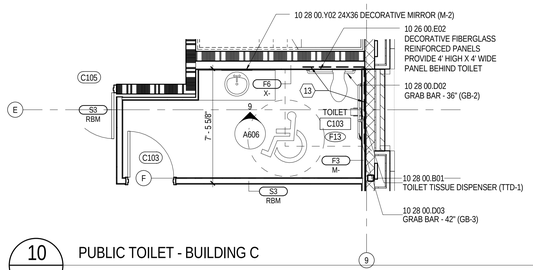

10 — PUBLIC TOILET - BUILDING C
1/4" = 1'-0"
A101B

MATERIAL KEYING

10 21 13.F06	SOLID POLYMER CLOSET DIVIDER PARTITION
10 26 00.E02	DECORATIVE FIBERGLASS REINFORCED PANELS
10 28 00.B01	TOILET TISSUE DISPENSER (TTD-1)
10 28 00.D02	GRAB BAR - 36" (GB-2)
10 28 00.D03	GRAB BAR - 42" (GB-3)
10 28 00.H01	SHOWER CURTAIN ROD (SR-1)
10 28 00.H02	SHOWER CURTAIN ROD (SR-2)
10 28 00.J03	24" TOWEL BAR (TB-1)
10 28 00.K01	RECESSED MEDICINE CABINET (MC-1)
10 28 00.K02	SURFACE-MOUNTED MEDICINE CABINET (MC-2)
10 28 00.M01	TOWEL HOOK (TH-1)
10 28 00.N01	ADJUSTABLE CLOSET SHELF AND ROD ON METAL STANDARDS (CRS-1)
10 28 00.Y03	MIRROR AND SHELF UNIT (M-3)

NEW WORK PLAN NOTES ENLARGED PLANS AND INTERIOR ELEVATIONS

NEW WORK NOTES

1 STACKED WASHER/DRYER UNIT (W/D) NOT IN CONTRACT
2 FREESTANDING WASHER (W) NOT IN CONTRACT
3 FREESTANDING DRYER (D) NOT IN CONTRACT
4 STACKED DRYERS (S/D) NOT IN CONTRACT
5 FREESTANDING RANGE, OWNER FURNISHED AND INSTALLED
6 DISHWASHER, OWNER FURNISHED AND INSTALLED
7 WALL OVEN - CONTRACTOR FURNISHED AND INSTALLED
8 REFRIGERATOR - OWNER FURNISHED AND INSTALLED
9 DOUBLE SINK - SEE PLUMBING DRAWINGS
10 MICROWAVE OVEN - OWNER FURNISHED AND INSTALLED
11 KITCHEN EXHAUST HOOD WITH FIRE EXTINGUISHING SYSTEM (APARTMENTS) - CONTRACTOR FURNISHED AND INSTALLED
12 DROP-IN RANGE, OWNER FURNISHED AND INSTALLED
13 PROVIDE METAL BLOCKING IN WALL FOR FUTURE GRAB BAR INSTALLATION – TYPICAL ALL TYPE B DWELLING UNITS
14 TRANSFER TYPE SHOWER ENCLOSURE – TYPICAL ALL HC-T UNITS
15 ROLL-IN TYPE SHOWER ENCLOSURE – TYPICAL ALL HC-R UNITS
16 WALL MOUNTED TV - NOT IN CONTRACT. CONTRACTOR TO PROVIDE 12 GA METAL WALL BLOCKING- COORDINATE WITH OWNER. SEE ELECTRICAL FOR POWER AND DATA OUTLETS
17 GARBAGE DISPOSAL - SEE PLUMBING DRAWINGS
18 TRANSFER TYPE TUB - SEE PLUMBING DRAWINGS

GENERAL NOTES ENLARGED PLANS AND INTERIOR ELEVATIONS

GENERAL NOTES

A UNLESS SPECIFICALLY NOTED OTHERWISE - INTERIOR DIMENSIONS ARE TO FACE OF STUD, FACE OF CMU OR FACE OF CONCRETE WHERE INDICATED. WHERE FACE OF FINISH OR CLEAR DIMENSIONS ARE INDICATED FOR COORDINATION PURPOSES OR TO DESIGNATE REQUIRED CODE CLEARANCES, THE DIMENSION IS TYPICALLY DESIGNATED AS "FOF" (FACE OF FINISH) OR "CLR" (CLEAR).
B CONTRACTOR RESPONSIBLE FOR FIELD MEASUREMENTS ON OVERALL DIMENSIONS.
C ROUGH-IN AND CLEARANCE DIMENSIONS, BLOCKING AND ANCHORAGE FOR SHOWER UNITS, (AS WELL AS LAUNDRY EQUIPMENT, APPLIANCES, AND SIMILAR BUILT-IN OR DIMENSIONALLY CRITICAL ITEMS) IS TO BE PROVIDED PER THE MANUFACTURER'S WRITTEN INSTALLATION INSTRUCTIONS.
D DIMENSIONS INDICATED AT SHOWER FIXTURES ARE TO FACE OF FINISH AND APPROXIMATE +/-. PRIOR TO BEGINNING PARTITION LAYOUT WORK OBTAIN ACTUAL SAMPLES OF EACH PREFABRICATED SHOWER ENCLOSURE AND CONSTRUCT MOCK-UPS OF EACH TYPICAL CONDITION TO ESTABLISH EXACT ROUGH-IN DIMENSIONS AND FRAMING, BLOCKING AND FINISH DETAILS.
E SHOWER UNITS SHALL BE GROUTED SOLID UNDERNEATH - FILL VOID BETWEEN FLOOR SLAB AND FLOOR OF SHOWER.
F DWELLING UNITS DESIGNATED AS "HC" ON THE PLANS ARE UNITS WITH MOBILITY FEATURES IN ACCORDANCE WITH APPLICABLE ACCESSIBILITY CODES. ROOMS NOTED "HC-R" ARE PROVIDED WITH ROLL-IN TYPE SHOWER ENCLOSURESS. ROOMS NOTED AS "HC-T" ARE PROVIDED WITH TRANSFER TYPE SHOWER ENCLOSURES. UNITS DESIGNATED WITH "C" ARE UNITS TO BE PROVIDED WITH COMMUNICATIONS FEATURES.
G ALL DWELLING UNITS NOT DESIGNATED AS "HC" ARE TO BE CONSTRUCTED AS "TYPE B" UNITS PER CHAPTER 11 OF ICC AND APPLICABLE PROVISIONS OF ICC/ANSI A117.1 AND THE FAIR HOUSING ACT DESIGN MANUAL.
H EXCEPT AS NOTED OTHERWISE, LAUNDRY EQUIPMENT AND RESIDENTIAL APPLIANCES ARE NOT IN CONTRACT (NIC) - LAUNDRY EQUIPMENT WILL BE FURNISHED AND INSTALLED BY THE OWNER'S SEPARATE LAUNDRY CONTRACTOR (WITH THE EXCEPTION OF STAFF APARTMENT LAUNDRY EQUIPMENT). RESIDENTIAL KITCHEN EQUIPMENT (WITH THE EXCEPTION OF WALL OVENS AND RANGE HOODS) WILL BE OWNER FURNISHED AND INSTALLED. PROVIDE ROUGH-IN FOR LAUNDRY EQUIPMENT AND RESIDENTIAL KITCHEN APPLIANCES. REFER TO ELECTRICAL DRAWINGS FOR POWER AND DATA - REFER TO PLUMBING DRAWINGS FOR GAS, WATER AND DRAINAGE - REFER TO MECHANICAL DRAWING FOR EXHAUSTING AS APPLICABLE. COORDINATE ROUGH-IN REQUIREMENTS WITH THE OWNER AND OBTAIN MANUFACTURER'S
I LOCATE WHEELCHAIR ACCESSIBLE WATER CLOSETS 17" FROM CENTERLINE OF WATER CLOSET TO FACE OF FINISH AT ADJACENT WALL. TYPICAL. FLUSH HANDLES TO BE LOCATED ON THE WIDE (OPEN) SIDE OF THE FIXTURE. TYPICAL.
J PROVIDE FLOOR DRAINS (FD) AT ROLL-IN (R) AND TRANSFER (T) SHOWERS. REFER TO PLUMBING DRAWINGS. SLOPE FLOORS TO DRAIN.
K WHERE NOTED AT HANDICAP ACCESSIBLE DWELLING UNITS, PROVIDE REMOVABLE BASE CABINETS AT KITCHEN AND BATHROOM SINKS COMPLYING WITH THE REQUIREMENTS OF ADA STANDARDS FOR ACCESSIBLE DESIGN (SECTION 606.2 EXCEPTION NO. 3).
L CONTRACTOR TO PROVIDE 12 GAGE METAL BLOCKING IN STUD WALLS FOR ANCHORAGE OF WALL MOUNTED ITEMS INCLUDING BUT NOT LIMITED TO TOILET ACCESSORIES, WALL CABINETS, WALL MOUNTED TV'S, SHELVING, TOILET PARTITIONS, OWNER FURNISHED EQUIPMENT INDICATED AND SIMILAR ITEMS. FOR "TYPE B" DWELLING UNITS, PROVIDE METAL BLOCKING IN WALLS FOR FUTURE INSTALLATIONS AS INDICATED. FOR WALL MOUNTED TVS IN LOUNGES, PROVIDE METAL BLOCKING 24" ABOVE AND BELOW ELECTRICAL JUNCTION BOXES.
M REFER TO A026 FOR DESCRIPTION OF ALL PARTITION TYPES.
N REFER TO A100 (1/8" FLOOR PLANS) SERIES DRAWINGS AND A300 SERIES DRAWINGS (ENLARGED PLANS) FOR PARTITION TYPE LOCATIONS.
O REFER TO LS SERIES DRAWING (LIFE SAFETY PLANS) FOR LOCATIONS OF FIRE RATED WALLS AND PARTITIONS.
P REFER TO A000 SERIES DRAWINGS FOR WINDOW TYPES AND DOOR TYPES, SCHEDULES AND DETAILS.
Q REFER TO A000 SERIES DRAWINGS FOR INTERIOR FINISH SCHEDULES.
R REFER TO A100 SERIES DRAWINGS (ENLARGED PLANS) FOR ADDITIONAL PLAN NOTES.
S REFER TO SPECIFICATIONS SECTION 10 28 00 FOR TOILET ACCESSORY SCHEDULE

THE McCARTY COMPANY
DESIGN GROUP, P.A.
TELEPHONE: (662) 844-4400
FAX: (662) 844-0500
OFFICE ADDRESS: 533 WEST MAIN STREET TUPELO, MS 38804
MAILING ADDRESS: P.O. BOX 440 TUPELO, MS 38802

DESIGN ARCHITECT
Hanbury Evans Wright Vlattas + Company
120 Atlantic Street
Norfolk, VA 23510
757.321.9600
www.hewv.com

PROJECT TITLE
USM - CENTURY PARK SOUTH
IHL# 208-297
HATTIESBURG, MS

THE UNIVERSITY OF SOUTHERN MISSISSIPPI

PROJECT NO: 2012020
DRAWN BY: Author
CHECKED BY: JTG
DATE ISSUED: 04 MAR 2013

REVISIONS & ADDENDUMS

SHEET TITLE
BUILDING C - ENLARGED PLANS - SLEEPING UNITS & BATHS

SHEET NUMBER
A315

3/4/2013 12:31:58 PM

Plot Date: BID DOCUMENTS - 04 MARCH 2013

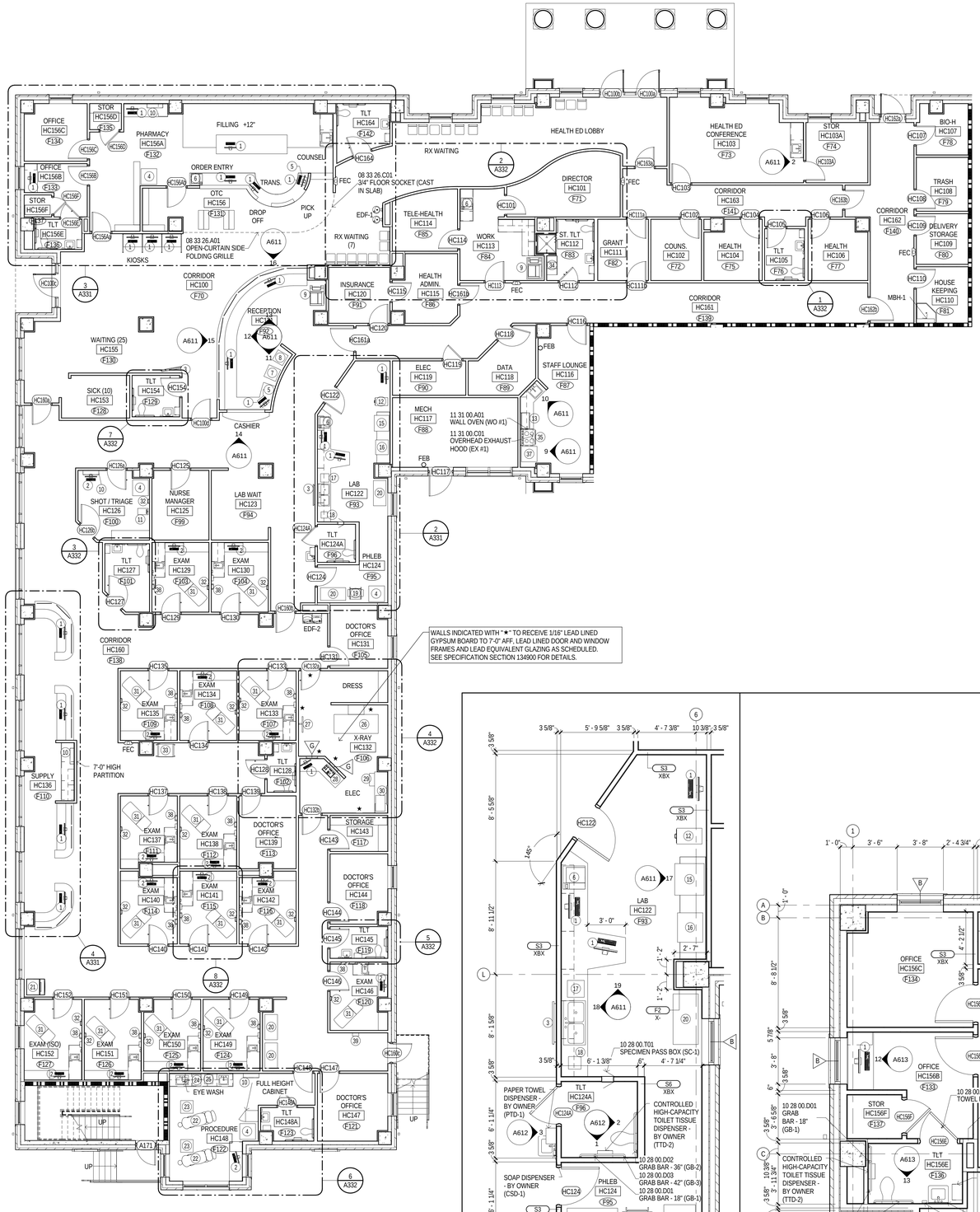

NORTH 1 1/8" = 1'-0" BUILDING A - CLINIC FEATURES PLAN A011

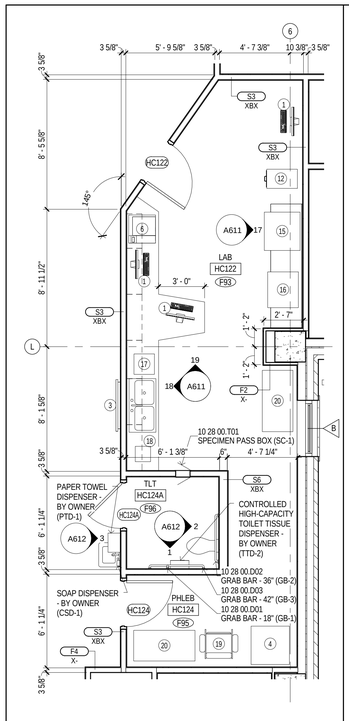

NORTH 2 1/4" = 1'-0" TLT HC124A A101A

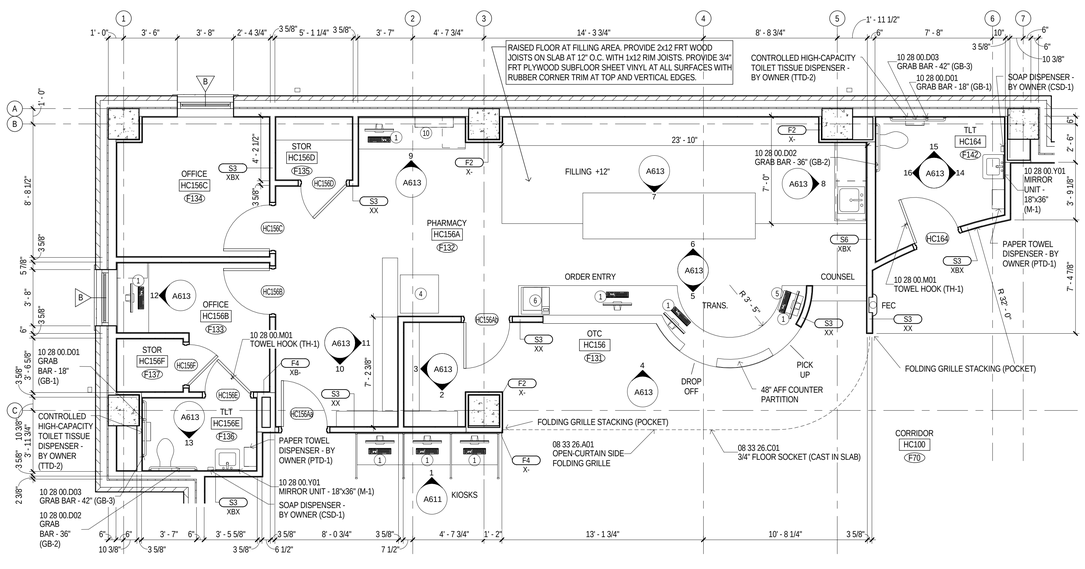

NORTH 3 1/4" = 1'-0" PHARMACY HC156A A101A

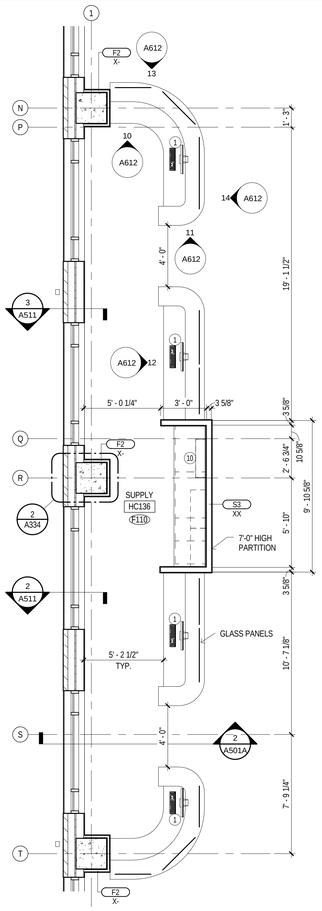

NORTH 4 1/4" = 1'-0" SUPPLY HC136 A101A

EQUIPMENT SCHEDULE

MARK	TYPE	PROVIDE	INSTALL	ROUGH-IN
1	Computer - Desktop	OWNER	OWNER	GC
2	Computer - Thin Client	OWNER	OWNER	GC
3	Wall-Mounted Television	OWNER	OWNER	GC
4	Full-Size Drug Refrigerator	OWNER	OWNER	GC
5	Cash Register Drawer	OWNER	OWNER	GC
6	Printer - Desktop	OWNER	OWNER	GC
7	Printer - Floor	OWNER	OWNER	GC
8	Scanner / Copier	OWNER	OWNER	GC
9	Copier / Printer	OWNER	OWNER	GC
10	Meds Cabinet	OWNER	GC	GC
11	Scale	OWNER	OWNER	N/A
12	File Cabinet	OWNER	OWNER	N/A
13	Microwave	OWNER	OWNER	GC
15	Centrifuge - Countertop	OWNER	OWNER	GC
16	Cell Dyn - Countertop	OWNER	OWNER	GC
17	Small Centrifuge	OWNER	OWNER	GC
18	Urine Analyzer	OWNER	OWNER	GC
19	Phlebotomy Chair	OWNER	OWNER	N/A
20	Supply Cart	OWNER	OWNER	N/A
21	Ice Machine - Floor	OWNER	OWNER	GC
22	Exam / Dental Chair	OWNER	OWNER	GC
23	Dental Cart	OWNER	OWNER	GC
24	Autoclave - Counter	OWNER	OWNER	GC
25	Sonic Washer - Counter	OWNER	OWNER	GC
26	X-Ray Table	OWNER	VENDOR	GC
27	X-Ray Chest Bucky	OWNER	VENDOR	GC
28	X-Ray Control Panel	OWNER	VENDOR	GC
29	X-Ray Power Supply	OWNER	VENDOR	GC
30	X-Ray Scanner / Burner	OWNER	OWNER	GC
31	Exam Table	OWNER	OWNER	N/A
32	Exam Console	OWNER	OWNER	N/A
33	EKG Machine - Cart	OWNER	OWNER	N/A
34	Dbl Stacked Lockers 12W	OWNER	OWNER	N/A
35	Oven / Range	OWNER	GC	GC
36	Dishwasher	OWNER	GC	GC
37	Refrigerator / Freezer	OWNER	OWNER	GC
38	Sharps Container	OWNER	OWNER	N/A
39	Time Clock	OWNER	OWNER	GC

MATERIAL KEYING

08 33 26.A01	OPEN-CURTAIN SIDE FOLDING GRILLE
08 33 26.C01	3/4" FLOOR SOCKET (CAST IN SLAB)
10 28 00.D01	GRAB BAR - 18" (GB-1)
10 28 00.D02	GRAB BAR - 36" (GB-2)
10 28 00.D03	GRAB BAR - 42" (GB-3)
10 28 00.M01	TOWEL HOOK (TH-1)
10 28 00.T01	SPECIMEN PASS BOX (SC-1)
10 28 00.Y01	MIRROR UNIT - 18"x36" (M-1)
11 31 00.A01	WALL OVEN (WO #1)
11 31 00.C01	OVERHEAD EXHAUST HOOD (EX #1)

LEGEND

FEC	10 44 13.B01 SEMI-RECESSED FIRE EXT. CABINET
FEB	10 44 13.C01 FIRE EXT. BRACKET
DS	PREMANUFACTURED ALUMINUM DOWNSPOUT
EDF-1	ELECTRIC DRINKING FOUNTAIN. SEE PLUMBING.
EDF-2	ELECTRIC DRINKING FOUNTAIN. SEE PLUMBING.
EDF-3	ELECTRIC DRINKING FOUNTAIN WITH BOTTLE FILLER. SEE PLUMBING.
MBH-1	10 28 00.L01 MOP AND BROOM HOLDER (MBH-1)
CJ	CONTROL JOINT
EJ-#	07 95 00.#### EXPANSION JOINT COVER (EJ-#)
E.P.	EMERGENCY PHONE SEE ELECTRICAL

GENERAL NOTES

A UNLESS SPECIFICALLY NOTED OTHERWISE - INTERIOR DIMENSIONS ARE TO FACE OF STUD, FACE OF CMU OR FACE OF CONCRETE WHERE INDICATED. WHERE FACE OF FINISH OR CLEAR DIMENSIONS ARE INDICATED FOR COORDINATION PURPOSES OR TO DESIGNATE REQUIRED CODE CLEARANCES, THE DIMENSION IS TYPICALLY DESIGNATED AS "FOF" (FACE OF FINISH) OR "CLEAR".

B CONTRACTOR RESPONSIBLE FOR FIELD MEASUREMENTS ON OVERALL DIMENSIONS.

C ROUGH-IN AND CLEARANCE DIMENSIONS, BLOCKING AND ANCHORAGE FOR SHOWER UNITS, (AS WELL AS LAUNDRY EQUIPMENT, APPLIANCES, AND SIMILAR BUILT-IN OR DIMENSIONALLY CRITICAL ITEMS) IS TO BE PROVIDED PER THE MANUFACTURER'S WRITTEN INSTALLATION INSTRUCTIONS.

D DIMENSIONS INDICATED AT SHOWER FIXTURES ARE APPROXIMATE. PRIOR TO BEGINNING PARTITION LAYOUT WORK OBTAIN ACTUAL SAMPLES OF EACH PREFABRICATED SHOWER ENCLOSURE AND CONSTRUCT MOCK-UPS OF EACH TYPICAL CONDITION TO ESTABLISH EXACT ROUGH-IN DIMENSIONS AND FRAMING, BLOCKING AND FINISH DETAILS.

E SHOWER UNITS SHALL BE GROUTED SOLID UNDERNEATH - FILL VOID BETWEEN FLOOR SLAB AND FLOOR OF SHOWER.

F DWELLING UNITS DESIGNATED AS "HC" ON THE PLANS ARE UNITS WITH MOBILITY FEATURES IN ACCORDANCE WITH APPLICABLE ACCESSIBILITY CODES. ROOMS NOTED "HC-R" ARE PROVIDED WITH ROLL-IN TYPE SHOWER ENCLOSURESS. ROOMS NOTED AS "HC-T" ARE PROVIDED WITH TRANSFER TYPE SHOWER ENCLOSURES. UNITS DESIGNATED WITH "C" ARE UNITS TO BE PROVIDED WITH COMMUNICATIONS FEATURES.

G ALL DWELLING UNITS NOT DESIGNATED AS "HC" ARE TO BE CONSTRUCTED AS "TYPE B" UNITS PER CHAPTER 11 OF ICC AND APPLICABLE PROVISIONS OF ICC/ANSI A117.1 AND THE FAIR HOUSING ACT DESIGN MANUAL.

H EXCEPT AS NOTED OTHERWISE, LAUNDRY EQUIPMENT AND RESIDENTIAL APPLIANCES ARE NOT IN CONTRACT (NIC) - LAUNDRY EQUIPMENT WILL BE FURNISHED AND INSTALLED BY THE OWNER'S SEPARATE LAUNDRY CONTRACTOR (WITH THE EXCEPTION OF STAFF APARTMENT LAUNDRY EQUIPMENT). RESIDENTIAL KITCHEN EQUIPMENT (WITH THE EXCEPTION OF WALL OVENS AND RANGE HOODS) WILL BE OWNER FURNISHED AND CONTRACTOR INSTALLED. PROVIDE ROUGH-IN FOR LAUNDRY EQUIPMENT AND RESIDENTIAL KITCHEN APPLIANCES. REFER TO ELECTRICAL DRAWINGS FOR POWER AND DATA - REFER TO PLUMBING DRAWINGS FOR GAS, WATER AND DRAINAGE - REFER TO MECHANICAL DRAWING FOR EXHAUSTING AS APPLICABLE. COORDINATE ROUGH-IN REQUIREMENTS WITH THE OWNER AND OBTAIN MANUFACTURER'S REQUIREMENTS PRIOR TO COMMENCEMENT OF ROUGH-IN WORK.

I LOCATE WHEELCHAIR ACCESSIBLE WATER CLOSETS 17" FROM CENTERLINE OF WATER CLOSET TO FACE OF FINISH AT ADJACENT WALL, TYPICAL. FLUSH HANDLES TO BE LOCATED ON THE WIDE (OPEN) SIDE OF THE FIXTURE, TYPICAL.

J PROVIDE FLOOR DRAINS (FD) AT ROLL-IN (R) AND TRANSFER (T) SHOWERS. REFER TO PLUMBING DRAWINGS. SLOPE FLOORS TO DRAIN.

K WHERE NOTED AT HANDICAP ACCESSIBLE DWELLING UNITS, PROVIDE REMOVABLE BASE CABINETS AT KITCHEN AND BATHROOM SINKS COMPLYING WITH THE REQUIREMENTS OF ADA STANDARDS FOR ACCESSIBLE DESIGN (SECTION 606.2 EXCEPTION NO. 3).

L CONTRACTOR TO PROVIDE 12 GAGE METAL BLOCKING IN STUD WALLS FOR ANCHORAGE OF WALL MOUNTED ITEMS INCLUDING BUT NOT LIMITED TO TOILET ACCESSORIES, WALL CABINETS, WALL MOUNTED TV'S, SHELVING, TOILET PARTITIONS, OWNER FURNISHED EQUIPMENT INDICATED AND SIMILAR ITEMS. FOR "TYPE B" DWELLING UNITS, PROVIDE METAL BLOCKING IN WALLS FOR FUTURE INSTALLATIONS AS INDICATED. FOR WALL MOUNTED TV'S IN LOUNGES, PROVIDE METAL BLOCKING 24" ABOVE AND BELOW ELECTRICAL JUNCTION BOXES.

M REFER TO A026 FOR DESCRIPTION OF ALL PARTITION TYPES.

N REFER TO A100 (1/8" FLOOR PLANS) SERIES DRAWINGS AND A300 SERIES DRAWINGS (ENLARGED PLANS) FOR PARTITION TYPE LOCATIONS.

O REFER TO LS SERIES DRAWING (LIFE SAFETY PLANS) FOR LOCATIONS OF FIRE RATED WALLS AND PARTITIONS.

P REFER TO A000 SERIES DRAWINGS FOR WINDOW TYPES AND DOOR TYPES, SCHEDULES AND DETAILS.

Q REFER TO A000 SERIES DRAWINGS FOR INTERIOR FINISH SCHEDULES.

R REFER TO A100 SERIES DRAWINGS (ENLARGED PLANS) FOR ADDITIONAL PLAN NOTES.

S REFER TO PROJECT MANUAL SECTION 10 28 00 FOR TOILET ACCESSORY SCHEDULE.

KEY PLAN

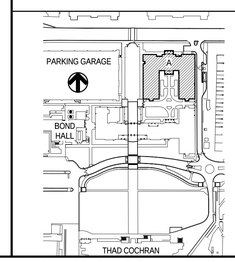

REGISTERED ARCHITECT — Thomas Alexander Saunders — 3482 — Tupelo, MS — STATE OF MISSISSIPPI — 04 March 2013

THE McCARTY COMPANY
DESIGN GROUP, P.A.
TELEPHONE: (662) 844-4400
FAX: (662) 844-0520
OFFICE ADDRESS: 533 WEST MAIN STREET TUPELO, MS 38804
MAILING ADDRESS: P.O. BOX 440 TUPELO, MS 38802

DESIGN ARCHITECT
Hanbury Evans Wright Vlattas + Company
120 Atlantic Street
Norfolk, VA 23510
757.321.9600
www.hewv.com

PROJECT TITLE
USM - CENTURY PARK SOUTH
IHL# 208-297
HATTIESBURG, MISSISSIPPI

THE UNIVERSITY OF SOUTHERN MISSISSIPPI

PROJECT NO: 2012020
DRAWN BY: JCF
CHECKED BY: JPH
DATE ISSUED: 04 MAR 2013

REVISIONS & ADDENDUMS

SHEET TITLE
BUILDING A - FEATURES & ENLARGED PLANS - HEALTH CLINIC

SHEET NUMBER
A331
123 of 458

3/11/2013 4:50:23 AM

Plot Date: BID DOCUMENTS - 04 MARCH 2013

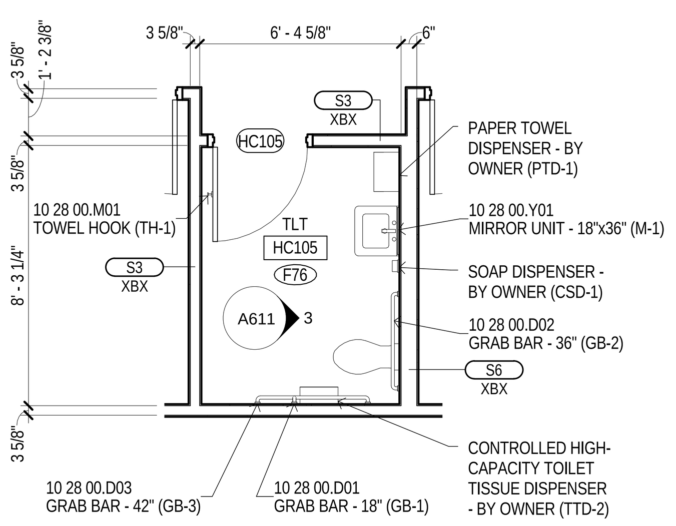

1 TLT HC105
1/4" = 1'-0"
A101A
NORTH

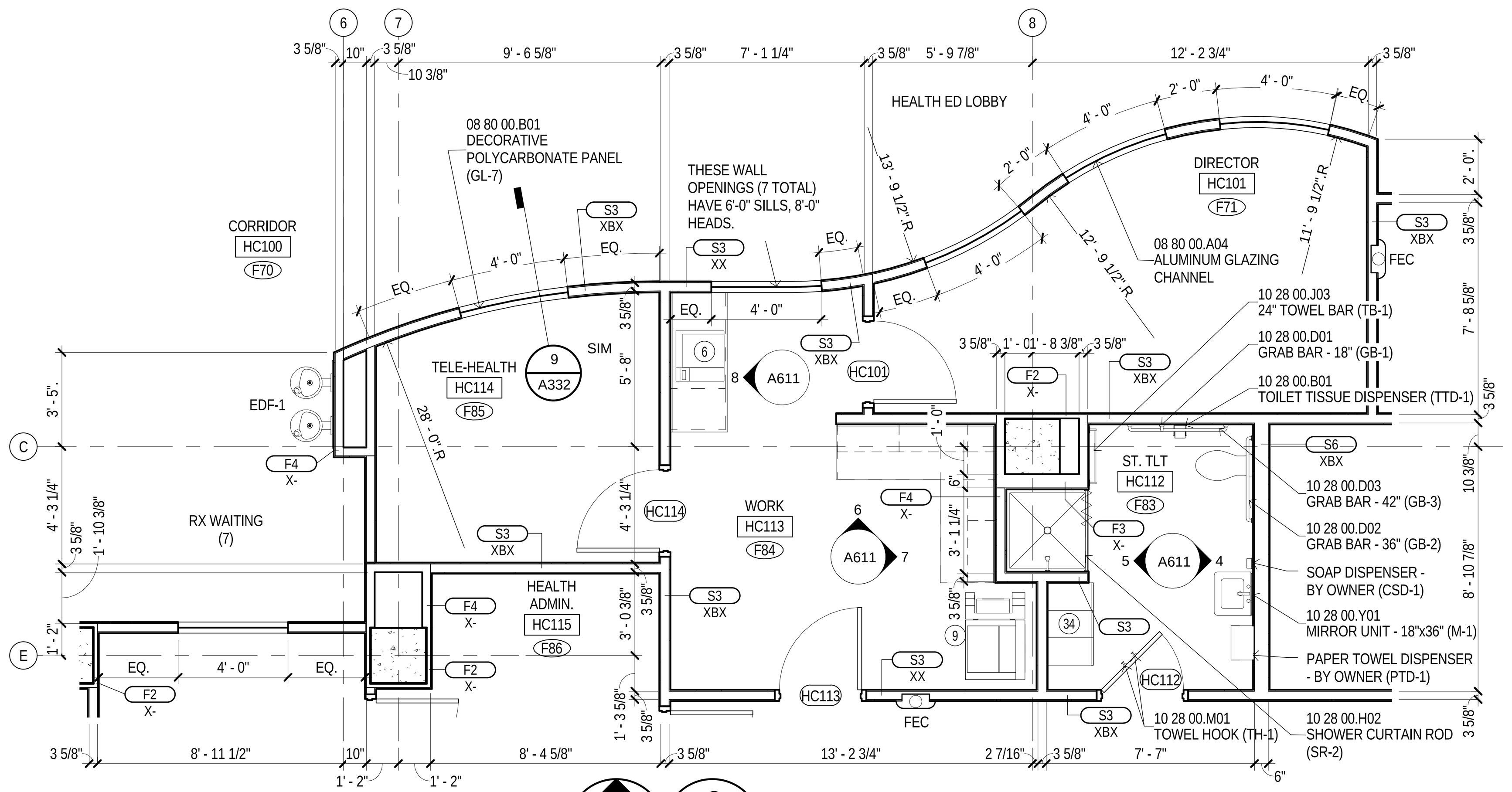

2 TLT HC112 / WORK HC113
1/4" = 1'-0"
A101A
NORTH

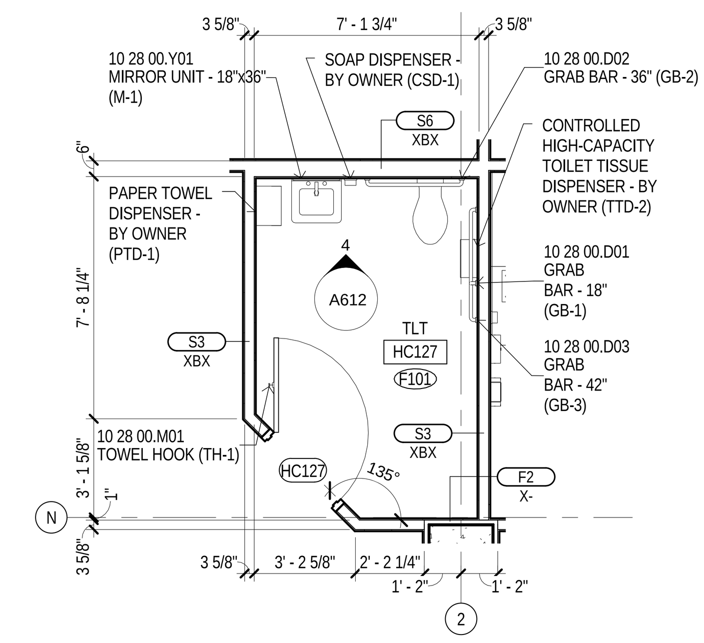

3 TLT HC127
1/4" = 1'-0"
A101A
NORTH

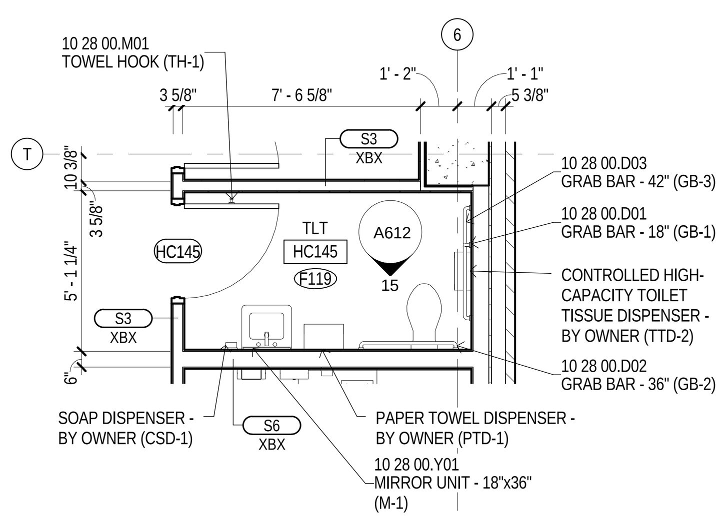

5 TLT HC145
1/4" = 1'-0"
A101A
NORTH

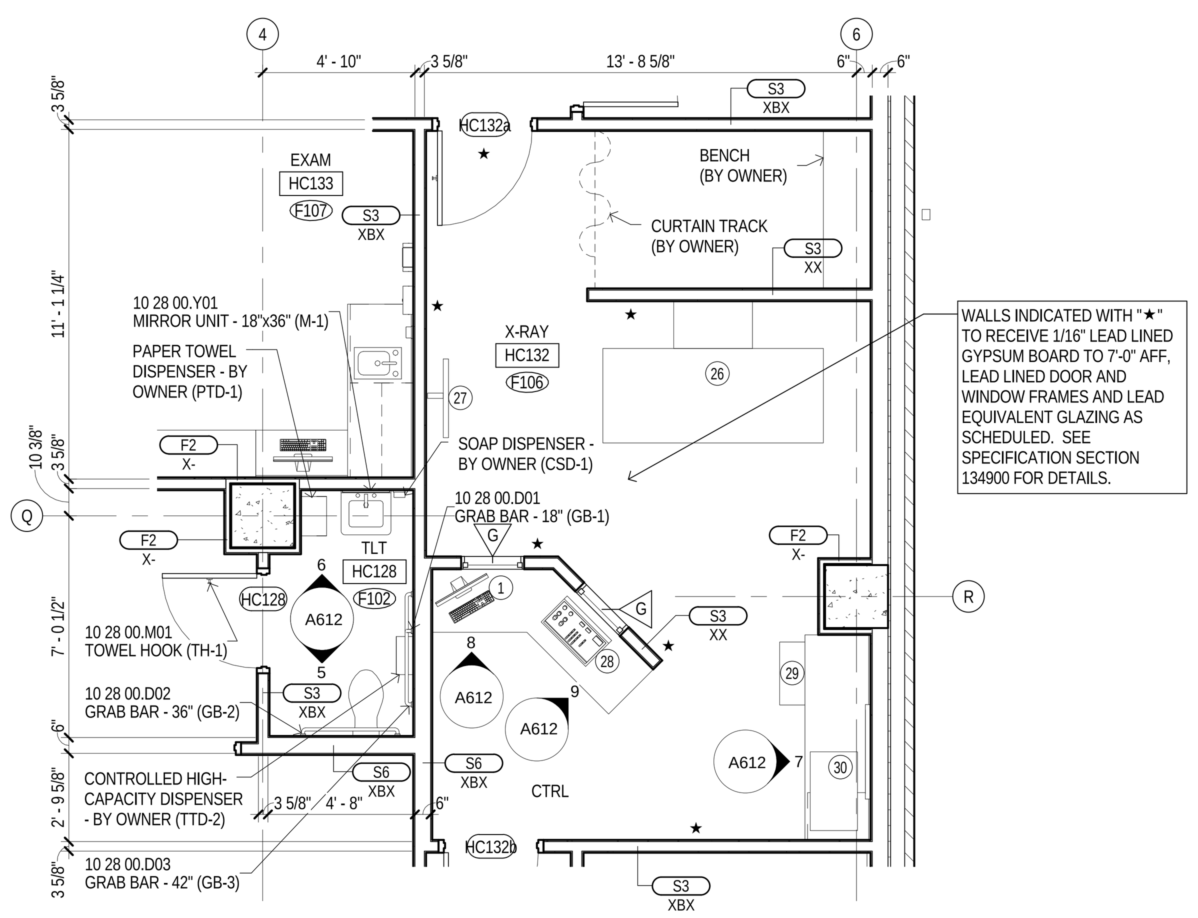

4 TLT HC128 / LAB HC132
1/4" = 1'-0"
A101A
NORTH

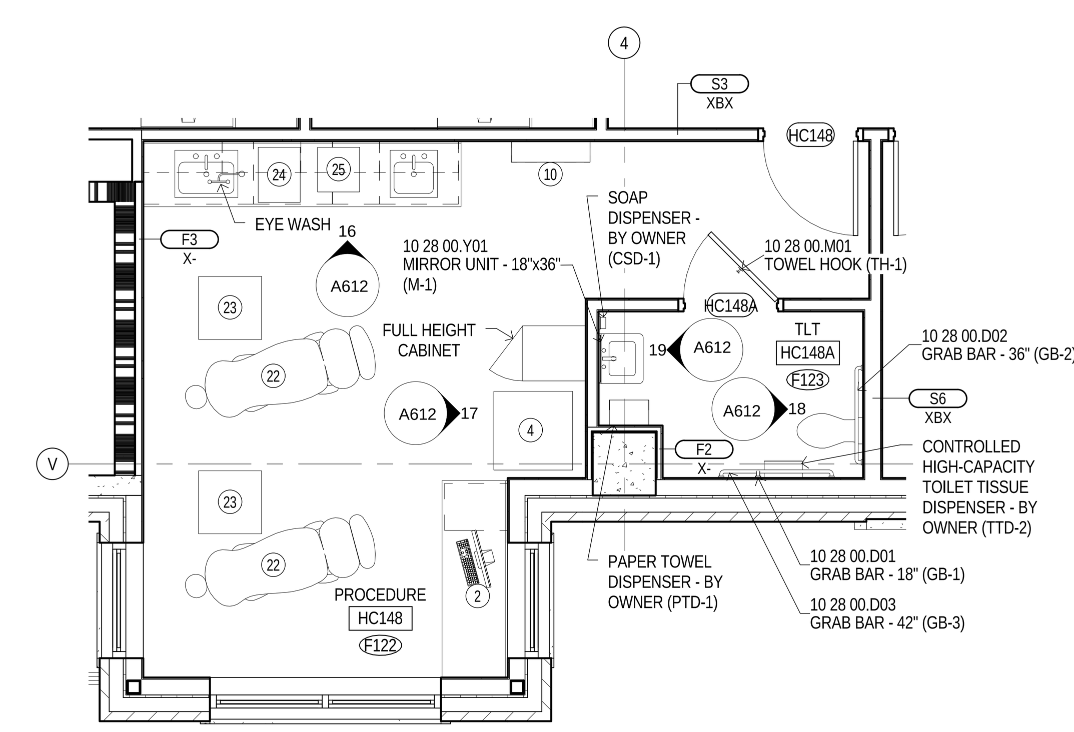

6 TLT HC148A / PROCEDURE HC148
1/4" = 1'-0"
A101A
NORTH

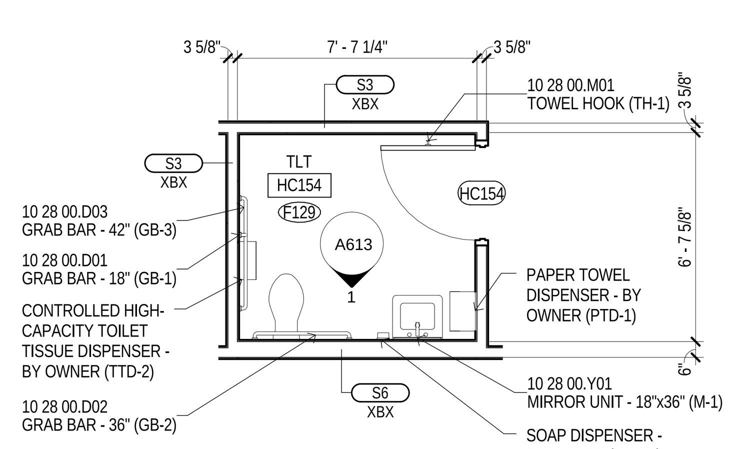

7 TLT HC153 / TLT HC154
1/4" = 1'-0"
A101A
NORTH

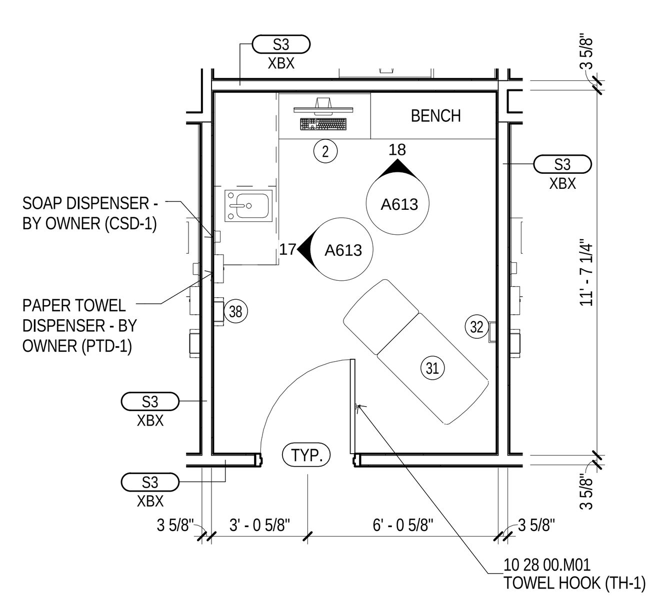

8 TYPICAL EXAM ROOM
1/4" = 1'-0"
A101A
NORTH

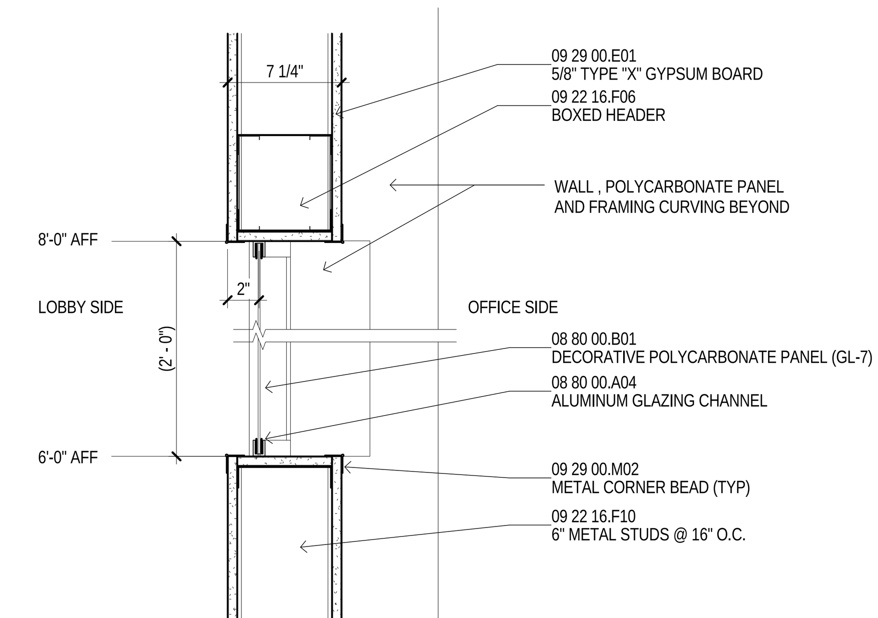

9 DW_CLINIC POLYCARB PANEL
1 1/2" = 1'-0"
A332

EQUIPMENT SCHEDULE

MARK	TYPE	PROVIDE	INSTALL	ROUGH-IN
1	Computer - Desktop	OWNER	OWNER	GC
2	Computer - Thin Client	OWNER	OWNER	GC
3	Wall-Mounted Television	OWNER	OWNER	GC
4	Full-Size Drug Refrigerator	OWNER	OWNER	GC
5	Cash Register Drawer	OWNER	OWNER	GC
6	Printer - Desktop	OWNER	OWNER	GC
7	Printer - Floor	OWNER	OWNER	GC
8	Scanner / Copier	OWNER	OWNER	GC
9	Copier / Printer	OWNER	OWNER	GC
10	Meds Cabinet	OWNER	GC	GC
11	Scale	OWNER	OWNER	N/A
12	File Cabinet	OWNER	OWNER	N/A
13	Microwave	OWNER	OWNER	GC
15	Centrifuge - Countertop	OWNER	OWNER	GC
16	Cell Dyn - Countertop	OWNER	OWNER	GC
17	Small Centrifuge	OWNER	OWNER	GC
18	Urine Analyzer	OWNER	OWNER	GC
19	Phlebotomy Chair	OWNER	OWNER	N/A
20	Supply Cart	OWNER	OWNER	N/A
21	Ice Machine - Floor	OWNER	OWNER	GC
22	Exam / Dental Chair	OWNER	OWNER	GC
23	Dental Cart	OWNER	OWNER	GC
24	Autoclave - Counter	OWNER	OWNER	GC
25	Sonic Washer - Counter	OWNER	OWNER	GC
26	X-Ray Table	OWNER	VENDOR	GC
27	X-Ray Chest Bucky	OWNER	VENDOR	GC
28	X-Ray Control Panel	OWNER	VENDOR	GC
29	X-Ray Power Supply	OWNER	VENDOR	GC
30	X-Ray Scanner / Burner	OWNER	OWNER	GC
31	Exam Table	OWNER	OWNER	N/A
32	Exam Console	OWNER	OWNER	N/A
33	EKG Machine - Cart	OWNER	OWNER	N/A
34	Dbl Stacked Lockers 12W	OWNER	OWNER	N/A
35	Oven / Range	OWNER	GC	GC
36	Dishwasher	OWNER	GC	GC
37	Refrigerator / Freezer	OWNER	OWNER	GC
38	Sharps Container	OWNER	OWNER	N/A
39	Time Clock	OWNER	OWNER	GC

MATERIAL KEYING

08 80 00.A04	ALUMINUM GLAZING CHANNEL
08 80 00.B01	DECORATIVE POLYCARBONATE PANEL (GL-7)
09 22 16.F06	BOXED HEADER
09 22 16.F10	6" METAL STUDS @ 16" O.C.
09 29 00.E01	5/8" TYPE "X" GYPSUM BOARD
09 29 00.M02	METAL CORNER BEAD (TYP)
10 28 00.B01	TOILET TISSUE DISPENSER (TTD-1)
10 28 00.D01	GRAB BAR - 18" (GB-1)
10 28 00.D02	GRAB BAR - 36" (GB-2)
10 28 00.D03	GRAB BAR - 42" (GB-3)
10 28 00.H02	SHOWER CURTAIN ROD (SR-2)
10 28 00.J03	24" TOWEL BAR (TB-1)
10 28 00.M01	TOWEL HOOK (TH-1)
10 28 00.Y01	MIRROR UNIT - 18"x36" (M-1)

LEGEND

FEC	10 44 13.B01 SEMI-RECESSED FIRE EXT. CABINET
FEB	10 44 13.C01 FIRE EXT. BRACKET
DS	PREMANUFACTURED ALUMINUM DOWNSPOUT
EDF-1	ELECTRIC DRINKING FOUNTAIN. SEE PLUMBING.
EDF-2	ELECTRIC DRINKING FOUNTAIN. SEE PLUMBING.
EDF-3	ELECTRIC DRINKING FOUNTAIN WITH BOTTLE FILLER. SEE PLUMBING.
MBH-1	10 28 00.L01 MOP AND BROOM HOLDER (MBH-1)
CJ	CONTROL JOINT
EJ-#	07 95 00.### EXPANSION JOINT COVER (EJ-#)
E.P.	EMERGENCY PHONE SEE ELECTRICAL

GENERAL NOTES

A UNLESS SPECIFICALLY NOTED OTHERWISE - INTERIOR DIMENSIONS ARE TO FACE OF STUD, FACE OF CMU OR FACE OF CONCRETE WHERE INDICATED. WHERE FACE OF FINISH OR CLEAR DIMENSIONS ARE INDICATED FOR COORDINATION PURPOSES OR TO DESIGNATE REQUIRED CODE CLEARANCES, THE DIMENSION IS TYPICALLY DESIGNATED AS "FOF" (FACE OF FINISH) OR "CLEAR".

B CONTRACTOR RESPONSIBLE FOR FIELD MEASUREMENTS ON OVERALL DIMENSIONS.

C ROUGH-IN AND CLEARANCE DIMENSIONS, BLOCKING AND ANCHORAGE FOR SHOWER UNITS, (AS WELL AS LAUNDRY EQUIPMENT, APPLIANCES, AND SIMILAR BUILT-IN OR DIMENSIONALLY CRITICAL ITEMS) IS TO BE PROVIDED PER THE MANUFACTURER'S WRITTEN INSTALLATION INSTRUCTIONS.

D DIMENSIONS INDICATED AT SHOWER FIXTURES ARE APPROXIMATE. PRIOR TO BEGINNING PARTITION LAYOUT WORK OBTAIN ACTUAL SAMPLES OF EACH PREFABRICATED SHOWER ENCLOSURE AND CONSTRUCT MOCK-UPS OF EACH TYPICAL CONDITION TO ESTABLISH EXACT ROUGH-IN DIMENSIONS AND FRAMING, BLOCKING AND FINISH DETAILS.

E SHOWER UNITS SHALL BE GROUTED SOLID UNDERNEATH - FILL VOID BETWEEN FLOOR SLAB AND FLOOR OF SHOWER.

F DWELLING UNITS DESIGNATED AS "HC" ON THE PLANS ARE UNITS WITH MOBILITY FEATURES IN ACCORDANCE WITH APPLICABLE ACCESSIBILITY CODES. ROOMS NOTED "HC-R" ARE PROVIDED WITH ROLL-IN TYPE SHOWER ENCLOSURESS. ROOMS NOTED AS "HC-T" ARE PROVIDED WITH TRANSFER TYPE SHOWER ENCLOSURES. UNITS DESIGNATED WITH "C" ARE UNITS TO BE PROVIDED WITH COMMUNICATIONS FEATURES.

G ALL DWELLING UNITS NOT DESIGNATED AS "HC" ARE TO BE CONSTRUCTED AS "TYPE B" UNITS PER CHAPTER 11 OF ICC AND APPLICABLE PROVISIONS OF ICC/ANSI A117.1 AND THE FAIR HOUSING ACT DESIGN MANUAL.

H EXCEPT AS NOTED OTHERWISE, LAUNDRY EQUIPMENT AND RESIDENTIAL APPLIANCES ARE NOT IN CONTRACT (NIC) - LAUNDRY EQUIPMENT WILL BE FURNISHED AND INSTALLED BY THE OWNER'S SEPARATE LAUNDRY CONTRACTOR (WITH THE EXCEPTION OF STAFF APARTMENT LAUNDRY EQUIPMENT). RESIDENTIAL KITCHEN EQUIPMENT (WITH THE EXCEPTION OF WALL OVENS AND RANGE HOODS) WILL BE OWNER FURNISHED AND CONTRACTOR INSTALLED. PROVIDE ROUGH-IN FOR LAUNDRY EQUIPMENT AND RESIDENTIAL KITCHEN APPLIANCES. REFER TO ELECTRICAL DRAWINGS FOR POWER AND DATA - REFER TO PLUMBING DRAWINGS FOR GAS, WATER AND DRAINAGE - REFER TO MECHANICAL DRAWING FOR EXHAUSTING AS APPLICABLE. COORDINATE ROUGH-IN REQUIREMENTS WITH THE OWNER AND OBTAIN MANUFACTURER'S REQUIREMENTS PRIOR TO COMMENCEMENT OF ROUGH-IN WORK.

I LOCATE WHEELCHAIR ACCESSIBLE WATER CLOSETS 17" FROM CENTERLINE OF WATER CLOSET TO FACE OF FINISH AT ADJACENT WALL, TYPICAL. FLUSH HANDLES TO BE LOCATED ON THE WIDE (OPEN) SIDE OF THE FIXTURE, TYPICAL.

J PROVIDE FLOOR DRAINS (FD) AT ROLL-IN (R) AND TRANSFER (T) SHOWERS. REFER TO PLUMBING DRAWINGS, SLOPE FLOORS TO DRAIN.

K WHERE NOTED AT HANDICAP ACCESSIBLE DWELLING UNITS, PROVIDE REMOVABLE BASE CABINETS AT KITCHEN AND BATHROOM SINKS COMPLYING WITH THE REQUIREMENTS OF ADA STANDARDS FOR ACCESSIBLE DESIGN (SECTION 606.2 EXCEPTION NO. 3).

L CONTRACTOR TO PROVIDE 12 GAGE METAL BLOCKING IN STUD WALLS FOR ANCHORAGE OF WALL MOUNTED ITEMS INCLUDING BUT NOT LIMITED TO TOILET ACCESSORIES, WALL CABINETS, WALL MOUNTED TV'S, SHELVING, TOILET PARTITIONS, OWNER FURNISHED EQUIPMENT INDICATED AND SIMILAR ITEMS. FOR "TYPE B" DWELLING UNITS, PROVIDE METAL BLOCKING IN WALLS FOR FUTURE INSTALLATIONS AS INDICATED. FOR WALL MOUNTED TV'S IN LOUNGES, PROVIDE METAL BLOCKING 24" ABOVE AND BELOW ELECTRICAL JUNCTION BOXES.

M REFER TO A026 FOR DESCRIPTION OF ALL PARTITION TYPES.

N REFER TO A100 (1/8" FLOOR PLANS) SERIES DRAWINGS AND A300 SERIES DRAWINGS (ENLARGED PLANS) FOR PARTITION TYPE LOCATIONS.

O REFER TO LS SERIES DRAWING (LIFE SAFETY PLANS) FOR LOCATIONS OF FIRE RATED WALLS AND PARTITIONS.

P REFER TO A000 SERIES DRAWINGS FOR WINDOW TYPES AND DOOR TYPES, SCHEDULES AND DETAILS.

Q REFER TO A000 SERIES DRAWINGS FOR INTERIOR FINISH SCHEDULES.

R REFER TO A100 SERIES DRAWINGS (ENLARGED PLANS) FOR ADDITIONAL PLAN NOTES.

S REFER TO PROJECT MANUAL SECTION 10 28 00 FOR TOILET ACCESSORY SCHEDULE.

KEY PLAN

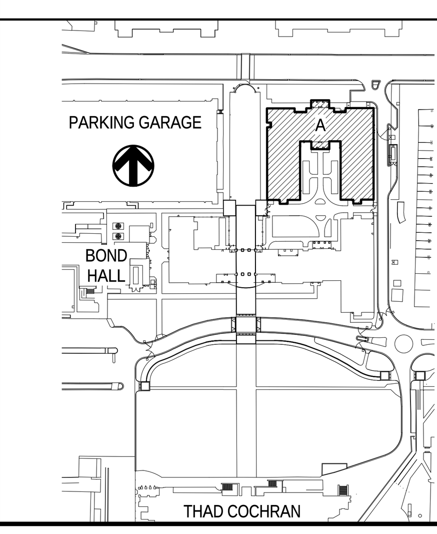

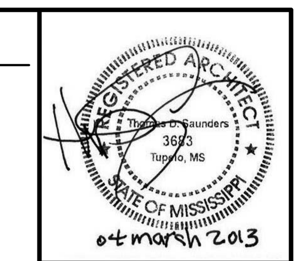

THE McCARTY COMPANY
DESIGN GROUP, P.A.
MAILING ADDRESS: P.O. BOX 440 TUPELO, MS 38802
OFFICE ADDRESS: 533 WEST MAIN STREET TUPELO, MS 38804
TELEPHONE: (662) 844-4400 FAX: (662) 844-0500

DESIGN ARCHITECT
Hanbury Evans Wright Vlattas + Company
120 Atlantic Street
Norfolk, VA 23510
757.321.9600
www.hewv.com

PROJECT TITLE
USM - CENTURY PARK SOUTH
IHL# 208-297
HATTIESBURG, MISSISSIPPI

THE UNIVERSITY OF SOUTHERN MISSISSIPPI

PROJECT NO: 2012020
DRAWN BY: JCF
CHECKED BY: JPH
DATE ISSUED: 04 MAR 2013

REVISIONS & ADDENDUMS

SHEET TITLE
BUILDING A - ENLARGED PLANS - HEALTH CLINIC

SHEET NUMBER
A332

Plot Date: BID DOCUMENTS - 04 MARCH 2013

3/11/2013 4:50:45 AM

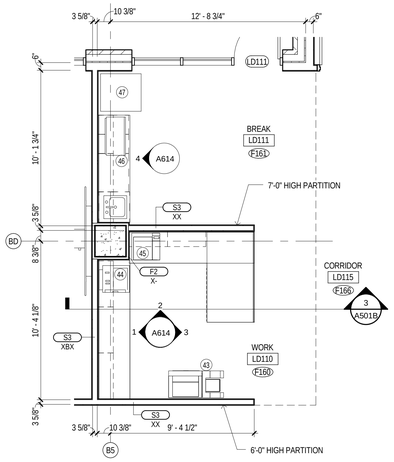

1 — WORK LD110 / BREAK LD111
1/4" = 1'-0" — A101B
NORTH

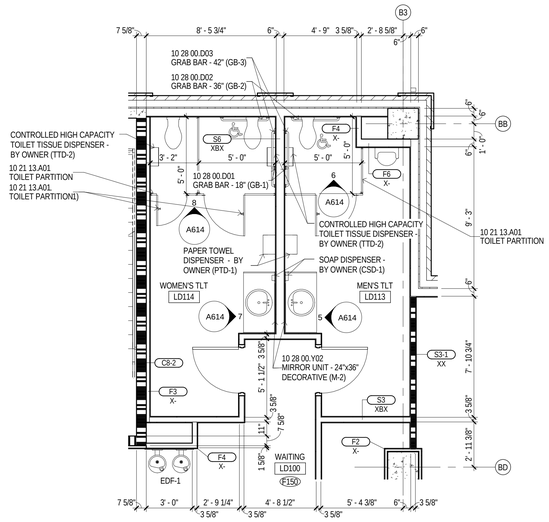

2 — W. TLT LD114 / M. TLT LD113
1/4" = 1'-0" — A101B
NORTH

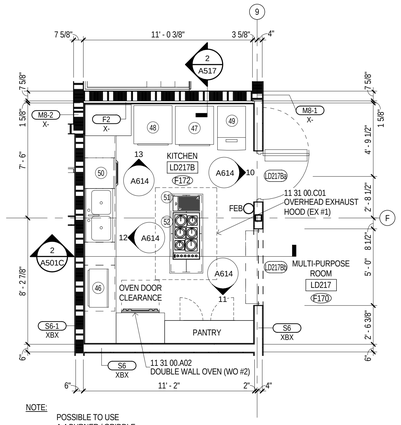

NOTE:
POSSIBLE TO USE A 4 BURNER / GRIDDLE COOKTOP - 36" LONG ALLOWS MORE PREP SPACE ON ISLAND.

3 — KITCHEN LD217B
1/4" = 1'-0" — A102B
NORTH

LEGEND

FEC	10 44 13.B01 SEMI-RECESSED FIRE EXT. CABINET
FEB	10 44 13.C01 FIRE EXT. BRACKET
DS	PREMANUFACTURED ALUMINUM DOWNSPOUT
EDF-1	ELECTRIC DRINKING FOUNTAIN. SEE PLUMBING.
EDF-2	ELECTRIC DRINKING FOUNTAIN. SEE PLUMBING.
EDF-3	ELECTRIC DRINKING FOUNTAIN WITH BOTTLE FILLER. SEE PLUMBING.
MBH-1	10 28 00.L01 MOP AND BROOM HOLDER (MBH-1)
CJ	CONTROL JOINT
EJ-#	07 95 00.### EXPANSION JOINT COVER (EJ-#)
E.P.	EMERGENCY PHONE SEE ELECTRICAL

MATERIAL KEYING

04 72 00.A03	CAST STONE COLUMN COVER ASSEMBLY #2
04 72 00.A05	CAST STONE COLUMN COVER ASSEMBLY #4
05 12 00.B01	TUBE COLUMN SEE STRUCTURAL
10 21 13.A01	TOILET PARTITION
10 28 00.D01	GRAB BAR - 18" (GB-1)
10 28 00.D02	GRAB BAR - 36" (GB-2)
10 28 00.D03	GRAB BAR - 42" (GB-3)
10 28 00.M01	TOWEL HOOK (TH-1)
10 28 00.Y02	MIRROR UNIT - 24"x36" DECORATIVE (M-2)
11 31 00.A02	DOUBLE WALL OVEN (WO #2)
11 31 00.C01	OVERHEAD EXHAUST HOOD (EX #1)

EQUIPMENT SCHEDULE

MARK	Type	Provide by	INSTALL	ROUGH-IN
41	Fixed Interactive Display	OWNER	OWNER	GC
42	Teacher's Cart	OWNER	OWNER	GC
43	Copier / Printer	OWNER	OWNER	GC
44	Fax - Desktop	OWNER	OWNER	GC
45	Printer - Desktop	OWNER	OWNER	GC
46	Microwave	OWNER	OWNER	GC
47	Refrigerator	OWNER	OWNER	GC
48	Freezer	OWNER	OWNER	GC
49	Ice Machine - Floor	OWNER	OWNER	GC
50	Dishwasher	OWNER	GC	GC
51	Griddle	OWNER	GC	GC
52	Cook Top	OWNER	GC	GC
53	Mobile Display Cart	OWNER	OWNER	GC

GENERAL NOTES

A UNLESS SPECIFICALLY NOTED OTHERWISE - INTERIOR DIMENSIONS ARE TO FACE OF STUD, FACE OF CMU OR FACE OF CONCRETE WHERE INDICATED. WHERE FACE OF FINISH OR CLEAR DIMENSIONS ARE INDICATED FOR COORDINATION PURPOSES OR TO DESIGNATE REQUIRED CODE CLEARANCES, THE DIMENSION IS TYPICALLY DESIGNATED AS "FOF" (FACE OF FINISH) OR "CLEAR".

B CONTRACTOR RESPONSIBLE FOR FIELD MEASUREMENTS ON OVERALL DIMENSIONS.

C ROUGH-IN AND CLEARANCE DIMENSIONS, BLOCKING AND ANCHORAGE FOR SHOWER UNITS, (AS WELL AS LAUNDRY EQUIPMENT, APPLIANCES, AND SIMILAR BUILT-IN OR DIMENSIONALLY CRITICAL ITEMS) IS TO BE PROVIDED PER THE MANUFACTURER'S WRITTEN INSTALLATION INSTRUCTIONS.

D DIMENSIONS INDICATED AT SHOWER FIXTURES ARE APPROXIMATE. PRIOR TO BEGINNING PARTITION LAYOUT WORK OBTAIN ACTUAL SAMPLES OF EACH PREFABRICATED SHOWER ENCLOSURE AND CONSTRUCT MOCK-UPS OF EACH TYPICAL CONDITION TO ESTABLISH EXACT ROUGH-IN DIMENSIONS AND FRAMING, BLOCKING AND FINISH DETAILS.

E SHOWER UNITS SHALL BE GROUTED SOLID UNDERNEATH - FILL VOID BETWEEN FLOOR SLAB AND FLOOR OF SHOWER.

F DWELLING UNITS DESIGNATED AS "HC" ON THE PLANS ARE UNITS WITH MOBILITY FEATURES IN ACCORDANCE WITH APPLICABLE ACCESSIBILITY CODES. ROOMS NOTED "HC-R" ARE PROVIDED WITH ROLL-IN TYPE SHOWER ENCLOSURESS. ROOMS NOTED AS "HC-T" ARE PROVIDED WITH TRANSFER TYPE SHOWER ENCLOSURES. UNITS DESIGNATED WITH "C" ARE UNITS TO BE PROVIDED WITH COMMUNICATIONS FEATURES.

G ALL DWELLING UNITS NOT DESIGNATED AS "HC" ARE TO BE CONSTRUCTED AS "TYPE B" UNITS PER CHAPTER 11 OF ICC AND APPLICABLE PROVISIONS OF ICC/ANSI A117.1 AND THE FAIR HOUSING ACT DESIGN MANUAL.

H EXCEPT AS NOTED OTHERWISE, LAUNDRY EQUIPMENT AND RESIDENTIAL APPLIANCES ARE NOT IN CONTRACT (NIC) - LAUNDRY EQUIPMENT WILL BE FURNISHED AND INSTALLED BY THE OWNER'S SEPARATE LAUNDRY CONTRACTOR (WITH THE EXCEPTION OF STAFF APARTMENT LAUNDRY EQUIPMENT). RESIDENTIAL KITCHEN EQUIPMENT (WITH THE EXCEPTION OF WALL OVENS AND RANGE HOODS) WILL BE OWNER FURNISHED AND CONTRACTOR INSTALLED. PROVIDE ROUGH-IN FOR LAUNDRY EQUIPMENT AND RESIDENTIAL KITCHEN APPLIANCES. REFER TO ELECTRICAL DRAWINGS FOR POWER AND DATA - REFER TO PLUMBING DRAWINGS FOR GAS, WATER AND DRAINAGE - REFER TO MECHANICAL DRAWING FOR EXHAUSTING AS APPLICABLE. COORDINATE ROUGH-IN REQUIREMENTS WITH THE OWNER AND OBTAIN MANUFACTURER'S REQUIREMENTS PRIOR TO COMMENCEMENT OF ROUGH-IN WORK.

I LOCATE WHEELCHAIR ACCESSIBLE WATER CLOSETS 17" FROM CENTERLINE OF WATER CLOSET TO FACE OF FINISH AT ADJACENT WALL, TYPICAL. FLUSH HANDLES TO BE LOCATED ON THE WIDE (OPEN) SIDE OF THE FIXTURE, TYPICAL.

J PROVIDE FLOOR DRAINS (FD) AT ROLL-IN (R) AND TRANSFER (T) SHOWERS. REFER TO PLUMBING DRAWINGS, SLOPE FLOORS TO DRAIN.

K WHERE NOTED AT HANDICAP ACCESSIBLE DWELLING UNITS, PROVIDE REMOVABLE BASE CABINETS AT KITCHEN AND BATHROOM SINKS COMPLYING WITH THE REQUIREMENTS OF ADA STANDARDS FOR ACCESSIBLE DESIGN (SECTION 606.2 EXCEPTION NO. 3).

L CONTRACTOR TO PROVIDE 12 GAGE METAL BLOCKING IN STUD WALLS FOR ANCHORAGE OF WALL MOUNTED ITEMS INCLUDING BUT NOT LIMITED TO TOILET ACCESSORIES, WALL CABINETS, WALL MOUNTED TV'S, SHELVING, TOILET PARTITIONS, OWNER FURNISHED EQUIPMENT INDICATED AND SIMILAR ITEMS. FOR "TYPE B" DWELLING UNITS, PROVIDE METAL BLOCKING IN WALLS FOR FUTURE INSTALLATIONS AS INDICATED. FOR WALL MOUNTED TV'S IN LOUNGES, PROVIDE METAL BLOCKING 24" ABOVE AND BELOW ELECTRICAL JUNCTION BOXES.

M REFER TO A026 FOR DESCRIPTION OF ALL PARTITION TYPES.

N REFER TO A100 (1/8" FLOOR PLANS) SERIES DRAWINGS AND A300 SERIES DRAWINGS (ENLARGED PLANS) FOR PARTITION TYPE LOCATIONS.

O REFER TO LS SERIES DRAWING (LIFE SAFETY PLANS) FOR LOCATIONS OF FIRE RATED WALLS AND PARTITIONS.

P REFER TO A000 SERIES DRAWINGS FOR WINDOW TYPES AND DOOR TYPES, SCHEDULES AND DETAILS.

Q REFER TO A000 SERIES DRAWINGS FOR INTERIOR FINISH SCHEDULES.

R REFER TO A100 SERIES DRAWINGS (ENLARGED PLANS) FOR ADDITIONAL PLAN NOTES.

S REFER TO PROJECT MANUAL SECTION 10 28 00 FOR TOILET ACCESSORY SCHEDULE.

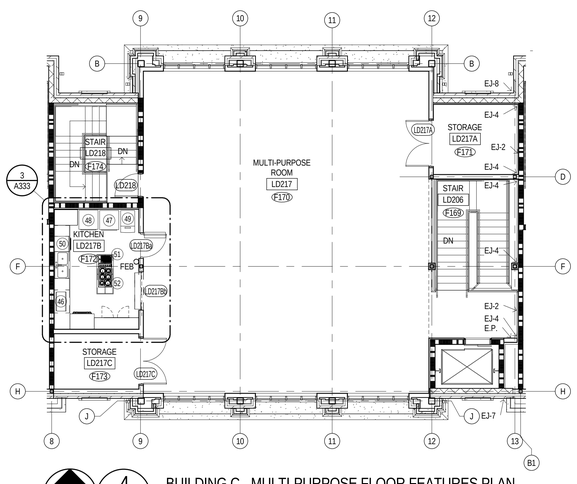

4 — BUILDING C - MULTI-PURPOSE FLOOR FEATURES PLAN
1/8" = 1'-0" — A201B
NORTH

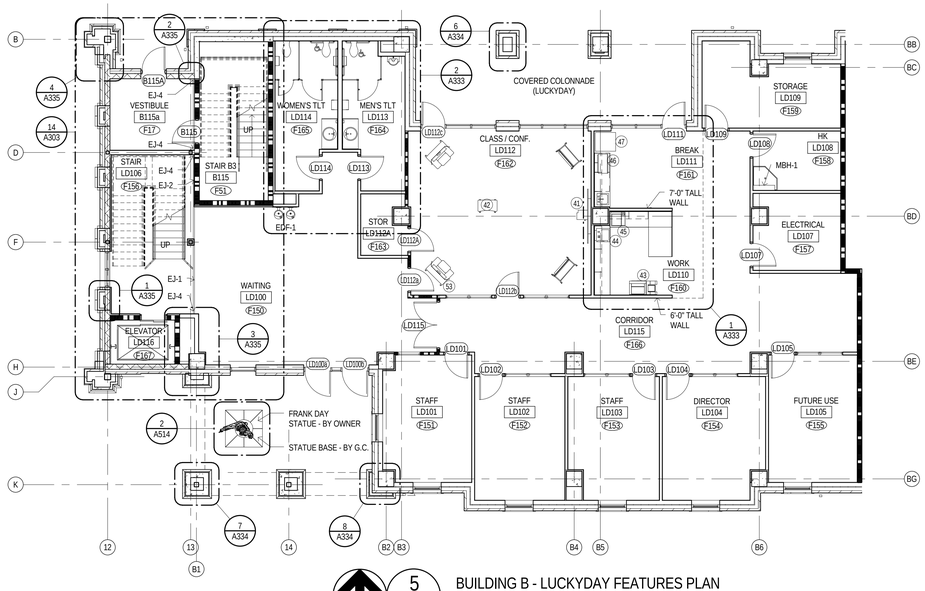

5 — BUILDING B - LUCKYDAY FEATURES PLAN
1/8" = 1'-0" — A201B
NORTH

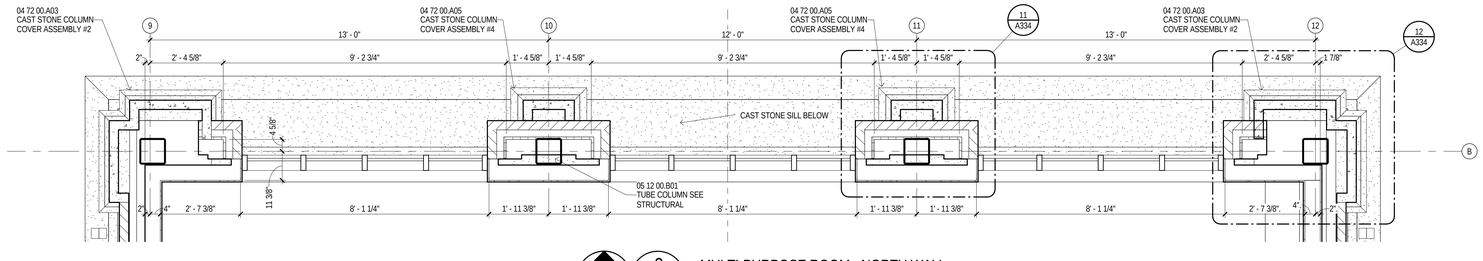

6 — MULTI-PURPOSE ROOM - NORTH WALL
1/2" = 1'-0" — A102C
NORTH

KEY PLAN

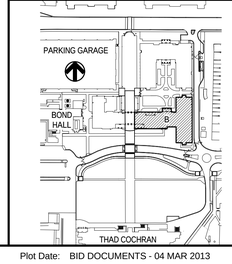

REGISTERED ARCHITECT — Thomas Hanbury Saunders — 3462 — Tupelo, MS — STATE OF MISSISSIPPI — 04 MARCH 2013

THE McCARTY COMPANY
DESIGN GROUP, P.A.
TELEPHONE: (662) 844-4400
FAX: (662) 844-0520
OFFICE ADDRESS: 533 WEST MAIN STREET TUPELO, MS 38804
MAILING ADDRESS: P.O. BOX 440 TUPELO, MS 38802

DESIGN ARCHITECT
Hanbury Evans Wright Vlattas + Company
120 Atlantic Street
Norfolk, VA 23510
757.321.9600
www.hewv.com

PROJECT TITLE
USM - CENTURY PARK SOUTH
IHL# 208-297
HATTIESBURG, MISSISSIPPI

THE UNIVERSITY OF SOUTHERN MISSISSIPPI

PROJECT NO: 2012020
DRAWN BY: JCF
CHECKED BY: JPH
DATE ISSUED: 04 MAR 2013

REVISIONS & ADDENDUMS

SHEET TITLE
BUILDINGS B-C-FEATURES & ENLARGED PLANS-LUCKYDAY

SHEET NUMBER
A333
125 of 458

3/11/2013 5:31:22 AM

Plot Date: BID DOCUMENTS - 04 MAR 2013

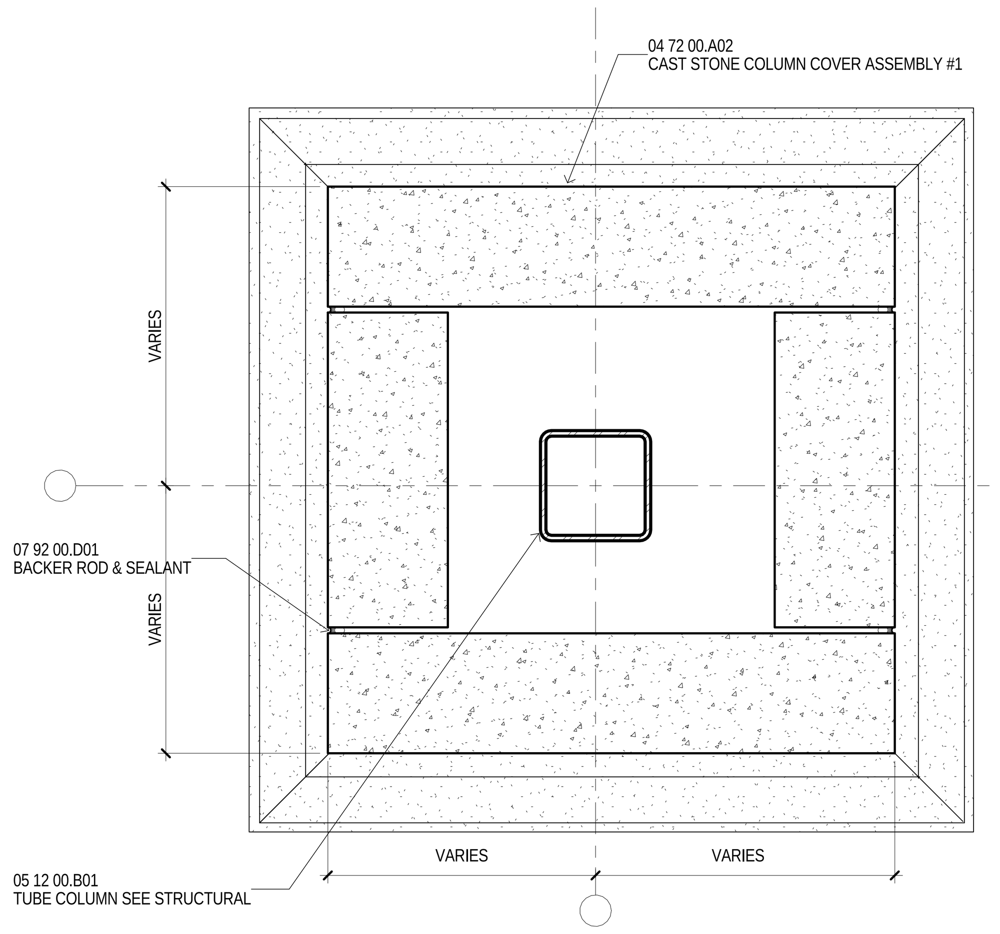

7 PLAN DETAIL
1 1/2" = 1'-0"

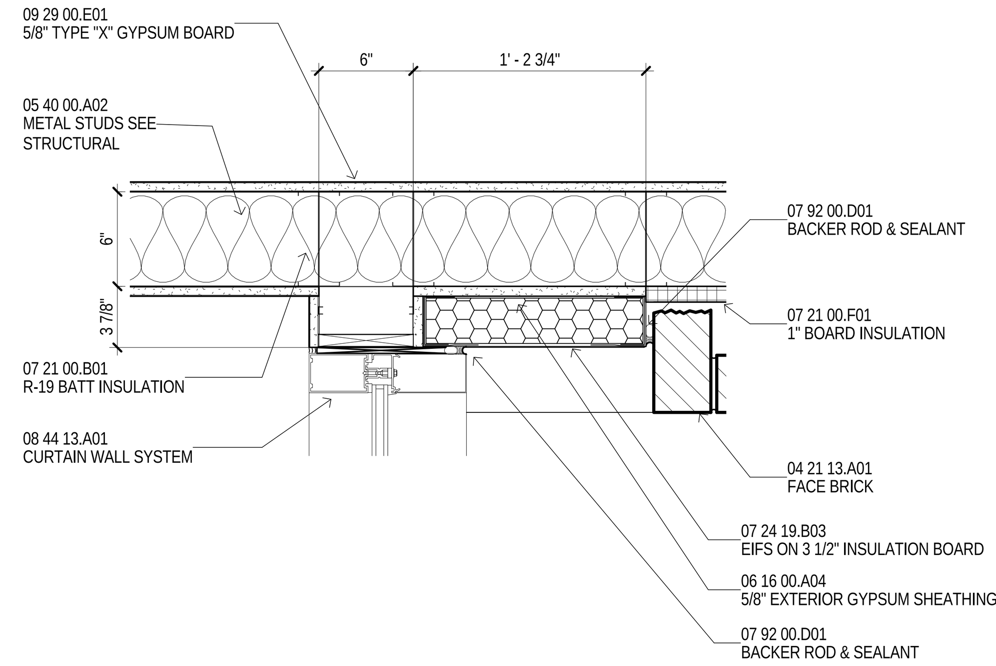

4 PLAN DETAIL
1 1/2" = 1'-0"
A102A

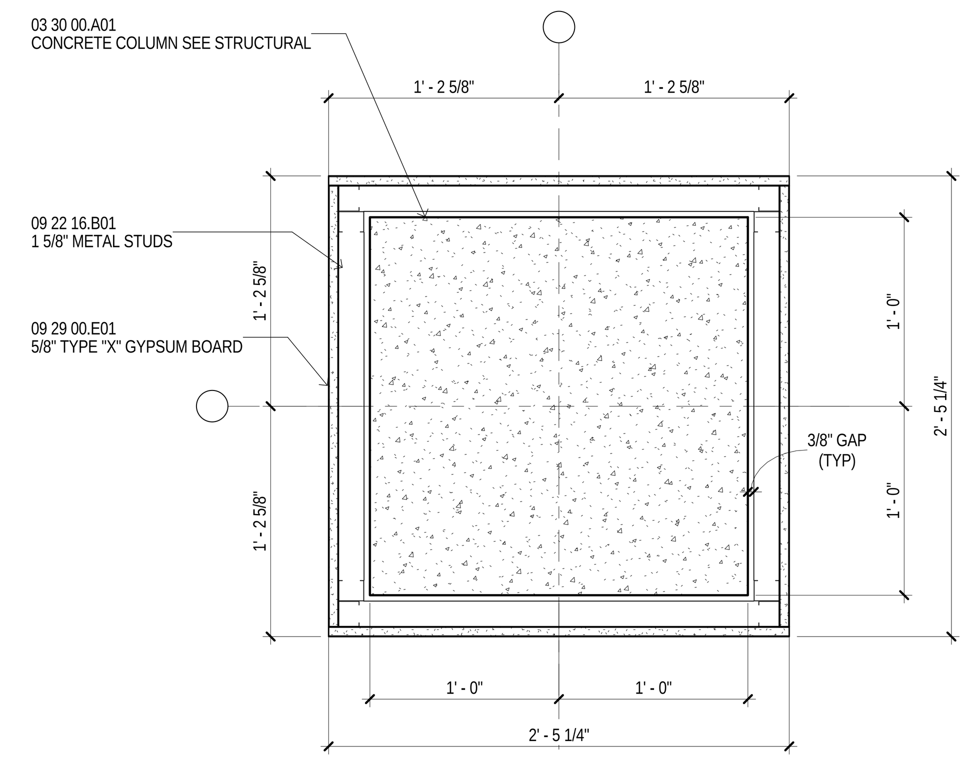

1 PLAN DETAIL
1 1/2" = 1'-0"
A101A

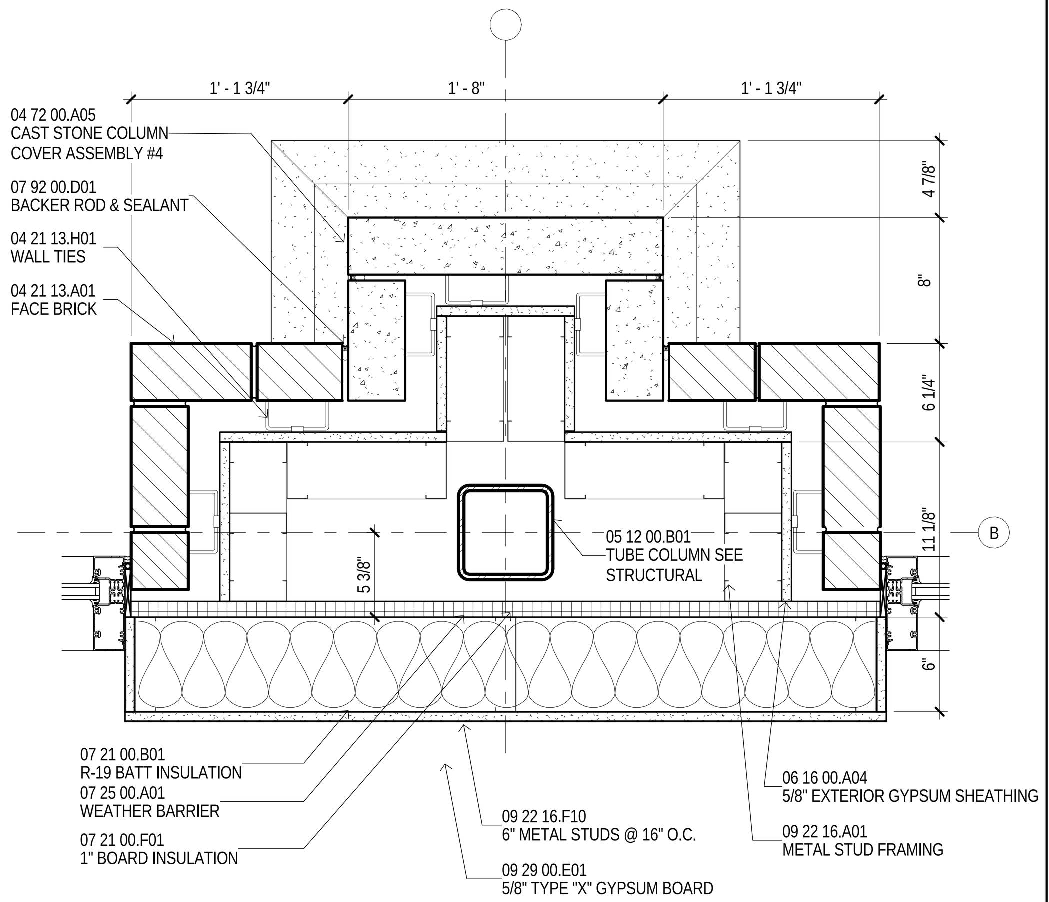

11 PLAN DETAIL
1 1/2" = 1'-0"

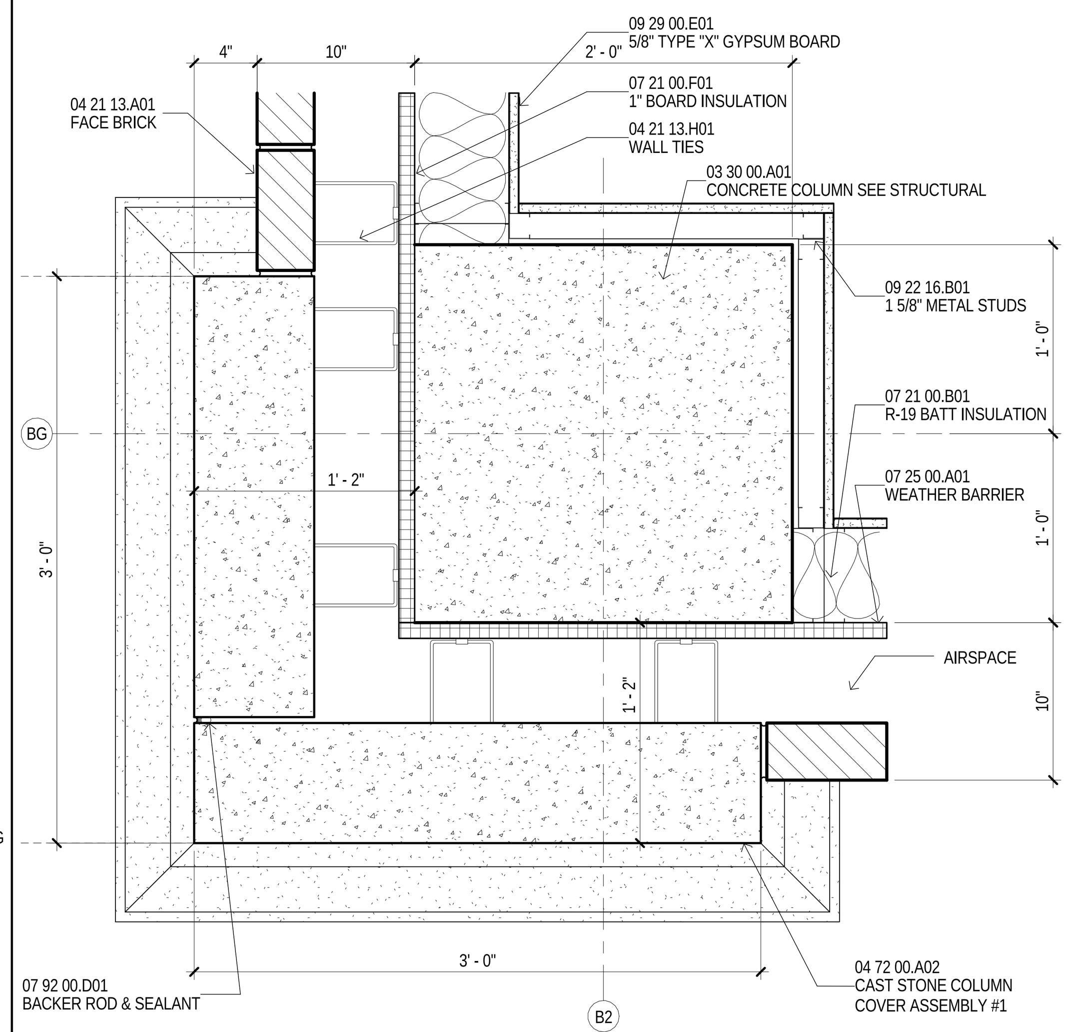

8 PLAN DETAIL
1 1/2" = 1'-0"

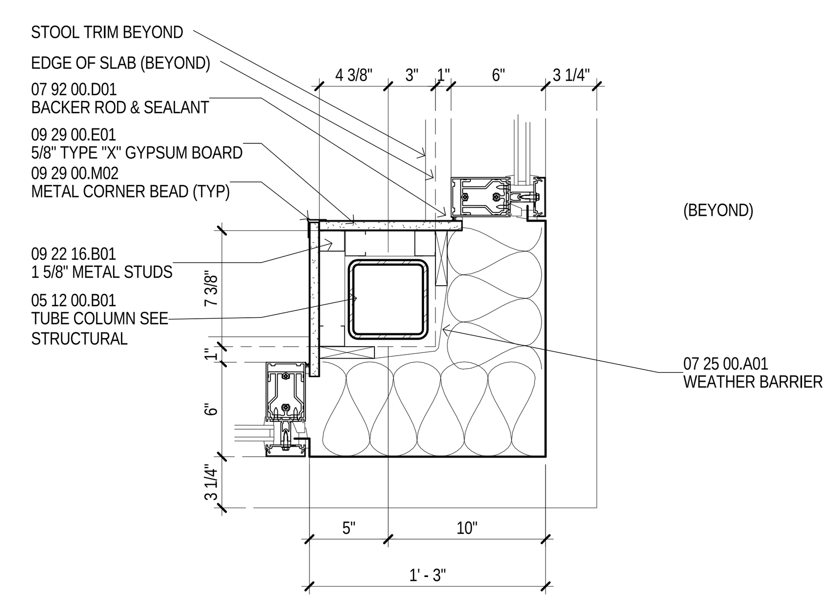

5 PLAN DETAIL
1 1/2" = 1'-0"
A102A

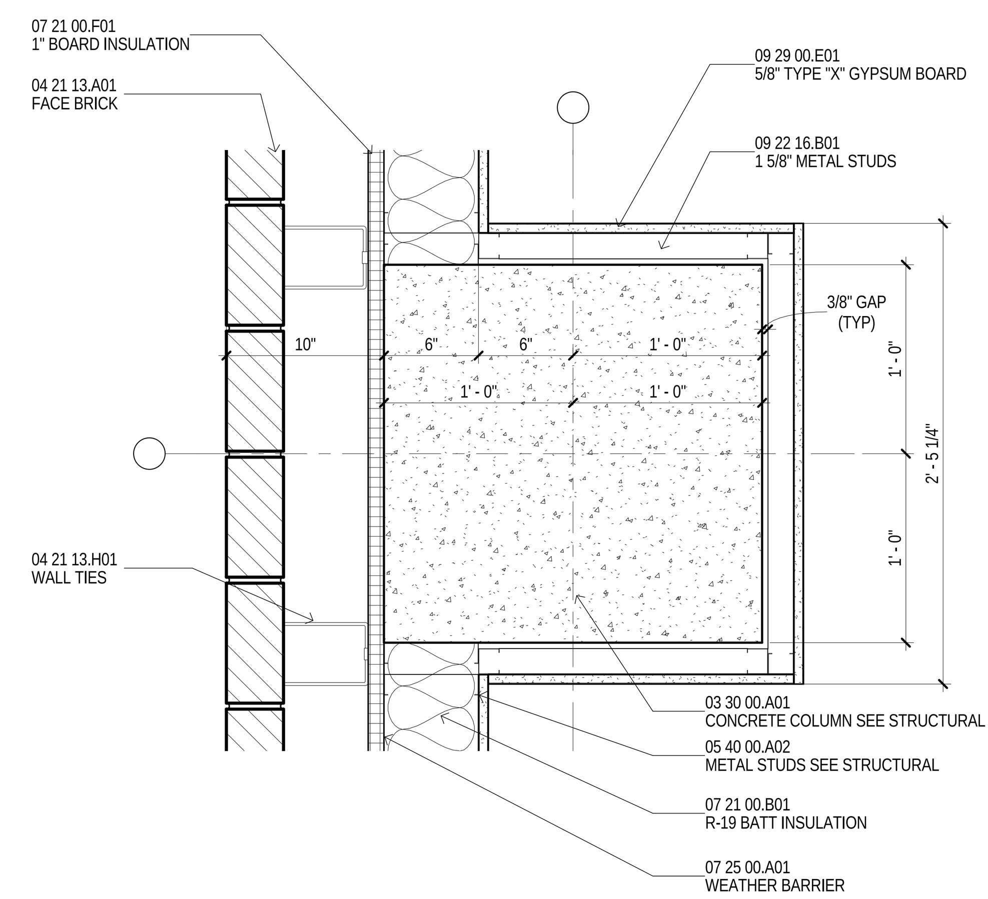

2 PLAN DETAIL
1 1/2" = 1'-0"
A331

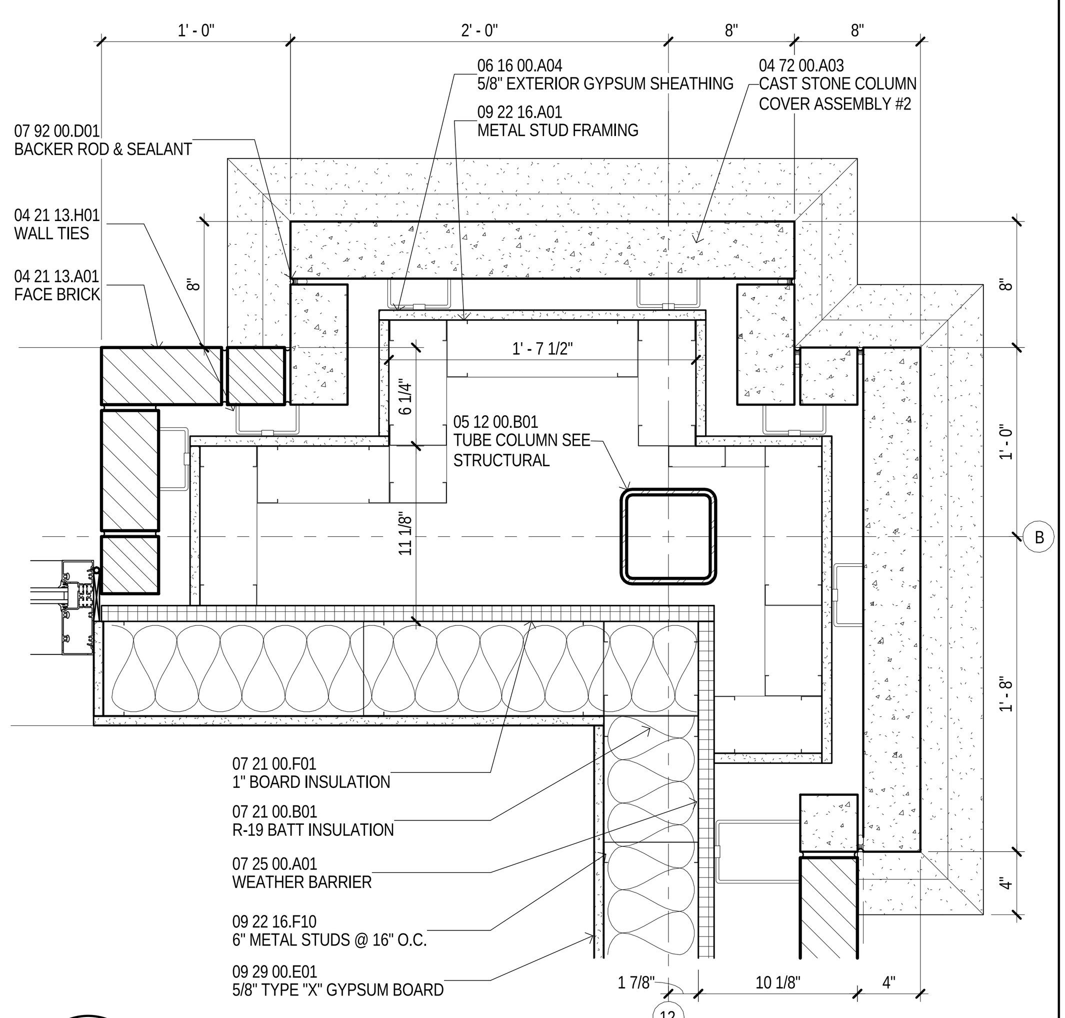

12 PLAN DETAIL
1 1/2" = 1'-0"

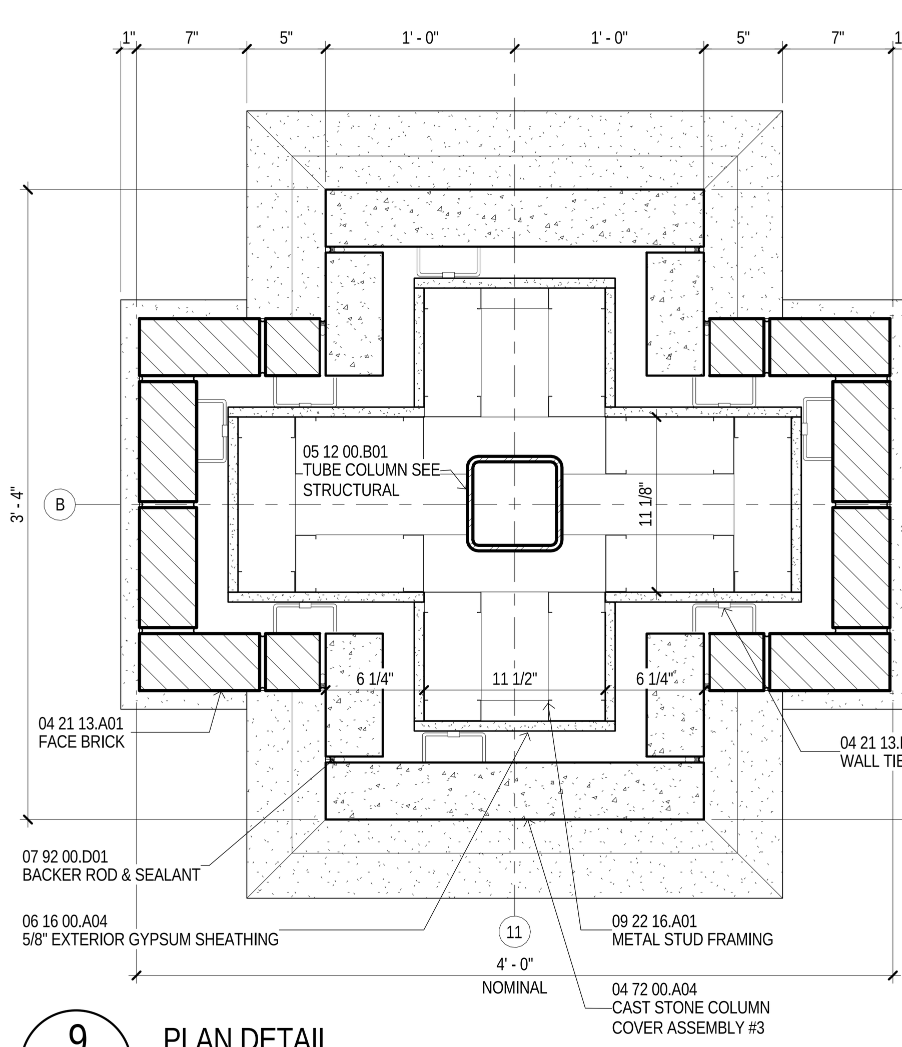

9 PLAN DETAIL
1 1/2" = 1'-0"

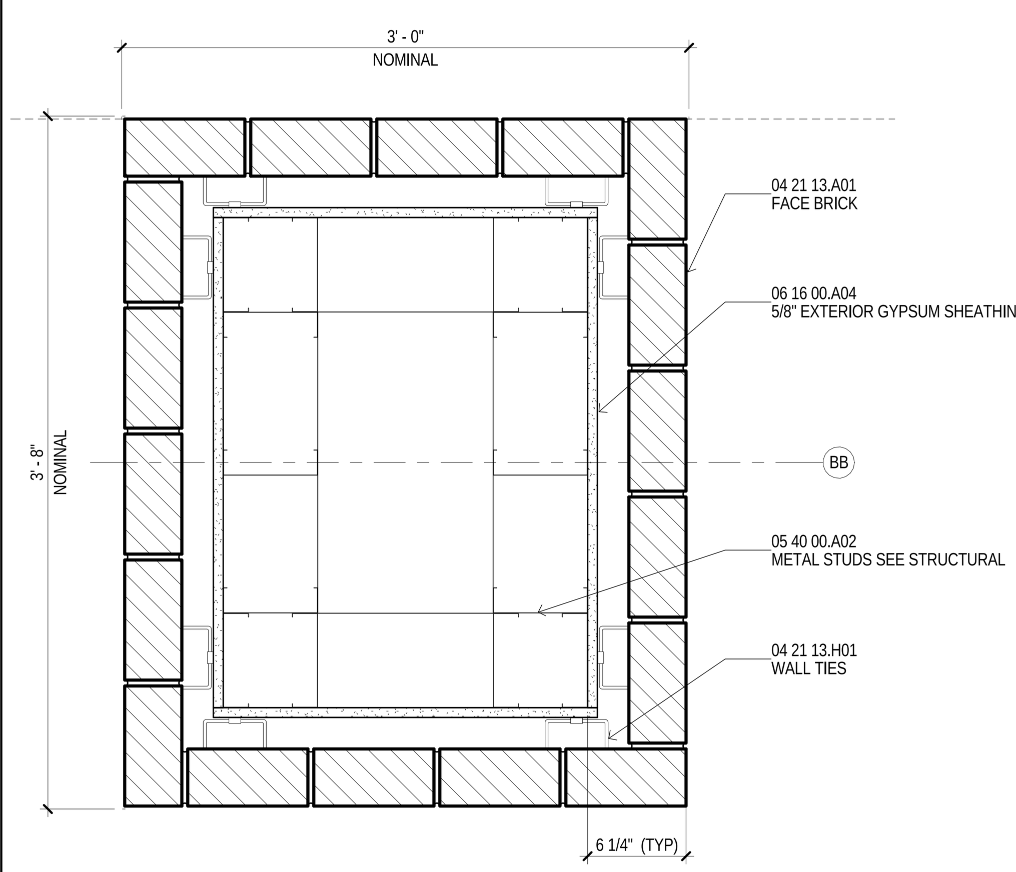

6 PLAN DETAIL
1 1/2" = 1'-0"

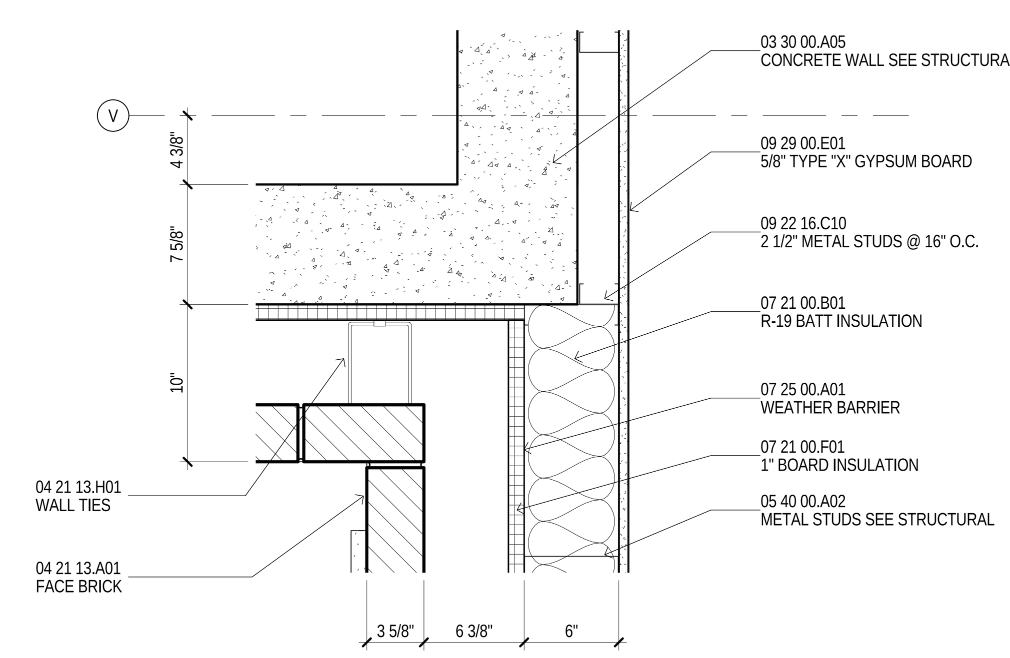

3 PLAN DETAIL
1 1/2" = 1'-0"
A101A

MATERIAL KEYING

03 30 00.A01	CONCRETE COLUMN SEE STRUCTURAL
03 30 00.A05	CONCRETE WALL SEE STRUCTURAL
04 21 13.A01	FACE BRICK
04 21 13.H01	WALL TIES
04 72 00.A02	CAST STONE COLUMN COVER ASSEMBLY #1
04 72 00.A03	CAST STONE COLUMN COVER ASSEMBLY #2
04 72 00.A04	CAST STONE COLUMN COVER ASSEMBLY #3
04 72 00.A05	CAST STONE COLUMN COVER ASSEMBLY #4
05 12 00.B01	TUBE COLUMN SEE STRUCTURAL
05 40 00.A02	METAL STUDS SEE STRUCTURAL
06 10 00.M13	1X TREATED BLOCKING
06 16 00.A04	5/8" EXTERIOR GYPSUM SHEATHING
07 21 00.B01	R-19 BATT INSULATION
07 21 00.F01	1" BOARD INSULATION
07 24 19.B03	EIFS ON 3 1/2" INSULATION BOARD
07 25 00.A01	WEATHER BARRIER
07 92 00.D01	BACKER ROD & SEALANT
08 44 13.A01	CURTAIN WALL SYSTEM
08 44 13.B02	EXTENDED FRAMING COVER
08 44 13.B04	CURTAIN WALL OUTSIDE CORNER COVER
08 80 00.M01	GLAZING SEE SCHEDULE
09 22 16.A01	METAL STUD FRAMING
09 22 16.B01	1 5/8" METAL STUDS
09 22 16.C10	2 1/2" METAL STUDS @ 16" O.C.
09 22 16.F10	6" METAL STUDS @ 16" O.C.
09 29 00.E01	5/8" TYPE "X" GYPSUM BOARD
09 29 00.M02	METAL CORNER BEAD (TYP)

GENERAL NOTES

A UNLESS SPECIFICALLY NOTED OTHERWISE - INTERIOR DIMENSIONS ARE TO FACE OF STUD, FACE OF CMU OR FACE OF CONCRETE WHERE INDICATED. WHERE FACE OF FINISH OR CLEAR DIMENSIONS ARE INDICATED FOR COORDINATION PURPOSES OR TO DESIGNATE REQUIRED CODE CLEARANCES, THE DIMENSION IS TYPICALLY DESIGNATED AS "FOF" (FACE OF FINISH) OR "CLEAR".

B CONTRACTOR RESPONSIBLE FOR FIELD MEASUREMENTS ON OVERALL DIMENSIONS.

C ROUGH-IN AND CLEARANCE DIMENSIONS, BLOCKING AND ANCHORAGE FOR SHOWER UNITS, (AS WELL AS LAUNDRY EQUIPMENT, APPLIANCES, AND SIMILAR BUILT-IN OR DIMENSIONALLY CRITICAL ITEMS) IS TO BE PROVIDED PER THE MANUFACTURER'S WRITTEN INSTALLATION INSTRUCTIONS.

D DIMENSIONS INDICATED AT SHOWER FIXTURES ARE APPROXIMATE. PRIOR TO BEGINNING PARTITION LAYOUT WORK OBTAIN ACTUAL SAMPLES OF EACH PREFABRICATED SHOWER ENCLOSURE AND CONSTRUCT MOCK-UPS OF EACH TYPICAL CONDITION TO ESTABLISH EXACT ROUGH-IN DIMENSIONS AND FRAMING, BLOCKING AND FINISH DETAILS.

E SHOWER UNITS SHALL BE GROUTED SOLID UNDERNEATH - FILL VOID BETWEEN FLOOR SLAB AND FLOOR OF SHOWER.

F DWELLING UNITS DESIGNATED AS "HC" ON THE PLANS ARE UNITS WITH MOBILITY FEATURES IN ACCORDANCE WITH APPLICABLE ACCESSIBILITY CODES. ROOMS NOTED "HC-R" ARE PROVIDED WITH ROLL-IN TYPE SHOWER ENCLOSURESS. ROOMS NOTED AS "HC-T" ARE PROVIDED WITH TRANSFER TYPE SHOWER ENCLOSURES. UNITS DESIGNATED WITH "C" ARE UNITS TO BE PROVIDED WITH COMMUNICATIONS FEATURES.

G ALL DWELLING UNITS NOT DESIGNATED AS "HC" ARE TO BE CONSTRUCTED AS "TYPE B" UNITS PER CHAPTER 11 OF ICC AND APPLICABLE PROVISIONS OF ICC/ANSI A117.1 AND THE FAIR HOUSING ACT DESIGN MANUAL.

H EXCEPT AS NOTED OTHERWISE, LAUNDRY EQUIPMENT AND RESIDENTIAL APPLIANCES ARE NOT IN CONTRACT (NIC) - LAUNDRY EQUIPMENT WILL BE FURNISHED AND INSTALLED BY THE OWNER'S SEPARATE LAUNDRY CONTRACTOR (WITH THE EXCEPTION OF STAFF APARTMENT LAUNDRY EQUIPMENT). RESIDENTIAL KITCHEN EQUIPMENT (WITH THE EXCEPTION OF WALL OVENS AND RANGE HOODS) WILL BE OWNER FURNISHED AND CONTRACTOR INSTALLED. PROVIDE ROUGH-IN FOR LAUNDRY EQUIPMENT AND RESIDENTIAL KITCHEN APPLIANCES. REFER TO ELECTRICAL DRAWINGS FOR POWER AND DATA - REFER TO PLUMBING DRAWINGS FOR GAS, WATER AND DRAINAGE - REFER TO MECHANICAL DRAWING FOR EXHAUSTING AS APPLICABLE. COORDINATE ROUGH-IN REQUIREMENTS WITH THE OWNER AND OBTAIN MANUFACTURER'S REQUIREMENTS PRIOR TO COMMENCEMENT OF ROUGH-IN WORK.

I LOCATE WHEELCHAIR ACCESSIBLE WATER CLOSETS 17" FROM CENTERLINE OF WATER CLOSET TO FACE OF FINISH AT ADJACENT WALL, TYPICAL. FLUSH HANDLES TO BE LOCATED ON THE WIDE (OPEN) SIDE OF THE FIXTURE, TYPICAL.

J PROVIDE FLOOR DRAINS (FD) AT ROLL-IN (R) AND TRANSFER (T) SHOWERS. REFER TO PLUMBING DRAWINGS, SLOPE FLOORS TO DRAIN.

K WHERE NOTED AT HANDICAP ACCESSIBLE DWELLING UNITS, PROVIDE REMOVABLE BASE CABINETS AT KITCHEN AND BATHROOM SINKS COMPLYING WITH THE REQUIREMENTS OF ADA STANDARDS FOR ACCESSIBLE DESIGN (SECTION 606.2 EXCEPTION NO. 3).

L CONTRACTOR TO PROVIDE 12 GAGE METAL BLOCKING IN STUD WALLS FOR ANCHORAGE OF WALL MOUNTED ITEMS INCLUDING BUT NOT LIMITED TO TOILET ACCESSORIES, WALL CABINETS, WALL MOUNTED TV'S, SHELVING, TOILET PARTITIONS, OWNER FURNISHED EQUIPMENT INDICATED AND SIMILAR ITEMS. FOR "TYPE B" DWELLING UNITS, PROVIDE METAL BLOCKING IN WALLS FOR FUTURE INSTALLATIONS AS INDICATED. FOR WALL MOUNTED TV'S IN LOUNGES, PROVIDE METAL BLOCKING 24" ABOVE AND BELOW ELECTRICAL JUNCTION BOXES.

M REFER TO A026 FOR DESCRIPTION OF ALL PARTITION TYPES.

N REFER TO A100 (1/8" FLOOR PLANS) SERIES DRAWINGS AND A300 SERIES DRAWINGS (ENLARGED PLANS) FOR PARTITION TYPE LOCATIONS.

O REFER TO LS SERIES DRAWING (LIFE SAFETY PLANS) FOR LOCATIONS OF FIRE RATED WALLS AND PARTITIONS.

P REFER TO A000 SERIES DRAWINGS FOR WINDOW TYPES AND DOOR TYPES, SCHEDULES AND DETAILS.

Q REFER TO A000 SERIES DRAWINGS FOR INTERIOR FINISH SCHEDULES.

R REFER TO A100 SERIES DRAWINGS (ENLARGED PLANS) FOR ADDITIONAL PLAN NOTES.

S REFER TO PROJECT MANUAL SECTION 10 28 00 FOR TOILET ACCESSORY SCHEDULE.

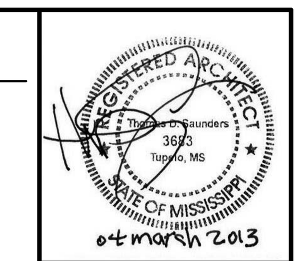

THE McCARTY COMPANY
DESIGN GROUP, P.A.

MAILING ADDRESS:
P.O. BOX 440
TUPELO, MS 38802

OFFICE ADDRESS:
533 WEST MAIN STREET
TUPELO, MS 38804

TELEPHONE:
(662) 844-4400
FAX:
(662) 844-0500

DESIGN ARCHITECT
Hanbury Evans Wright Vlattas + Company
120 Atlantic Street
Norfolk, VA 23510
757.321.9600
www.hewv.com

PROJECT TITLE
USM - CENTURY PARK SOUTH
IHL# 208-297
HATTIESBURG, MISSISSIPPI

THE UNIVERSITY OF SOUTHERN MISSISSIPPI

PROJECT NO:
- 2012020

DRAWN BY:
- DAS

CHECKED BY:
- JPH

DATE ISSUED:
- 04 MAR 2013

REVISIONS & ADDENDUMS

SHEET TITLE
PLAN DETAILS

SHEET NUMBER
A334

Plot Date: BID DOCUMENTS - 04 MARCH 2013

3/11/2013 4:51:05 AM

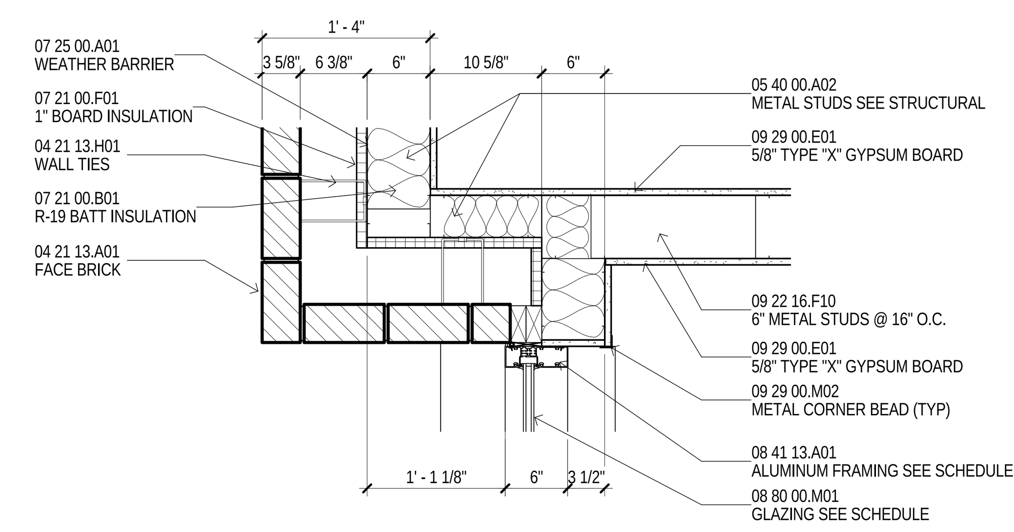

5 — PLAN DETAIL - FIRST FLOOR
1" = 1'-0" A101B

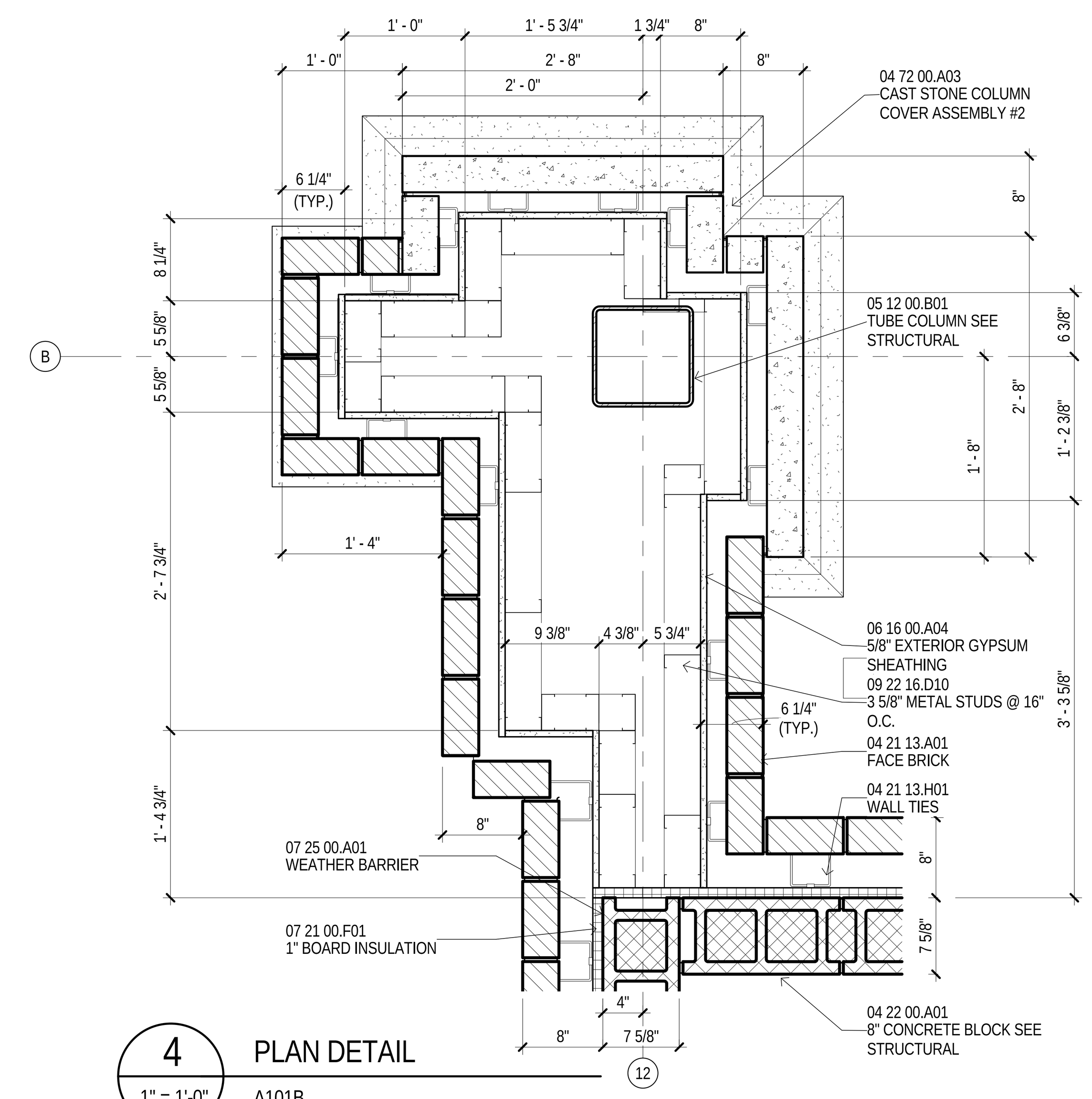

4 — PLAN DETAIL
1" = 1'-0" A101B

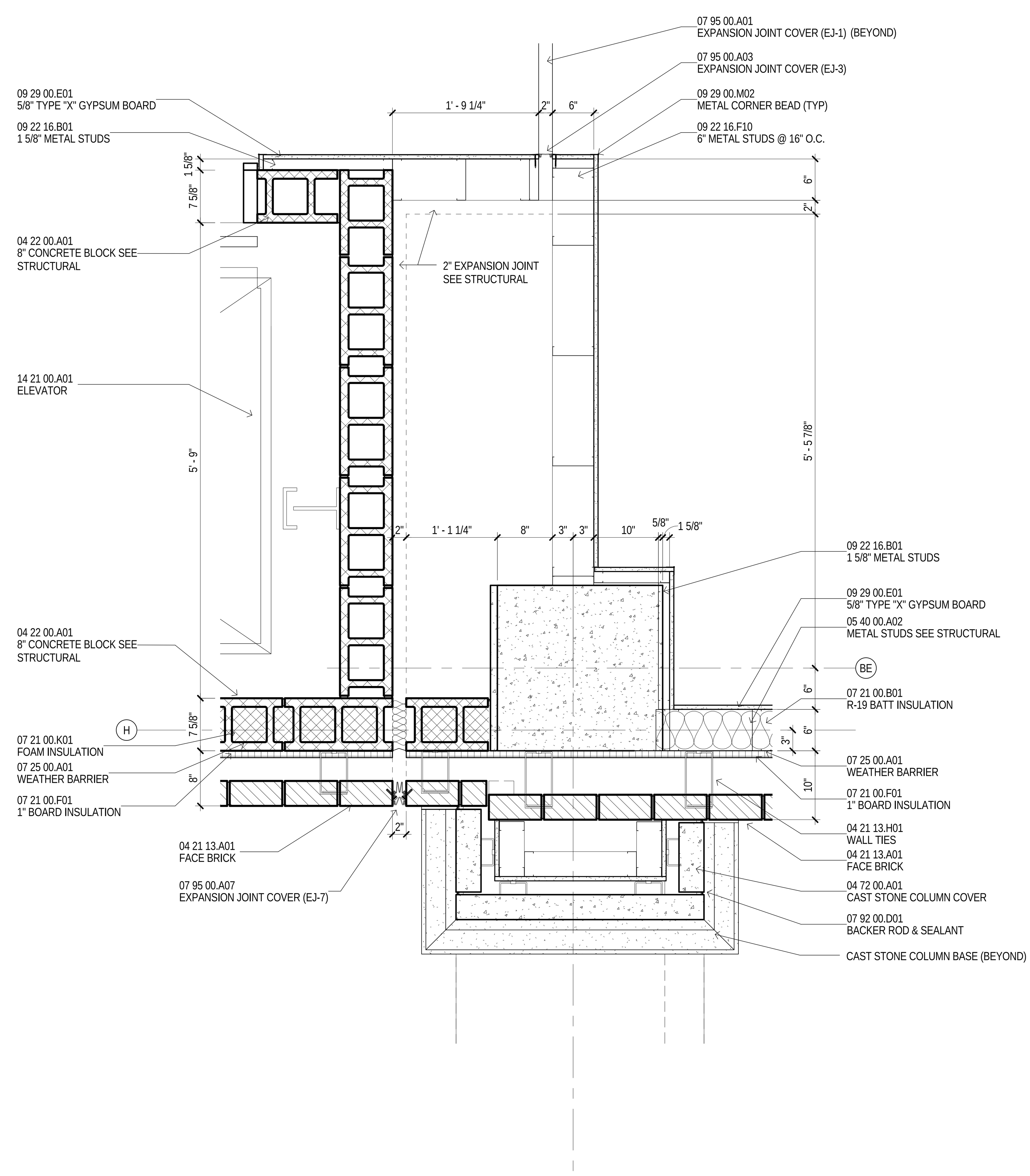

3 — EXTERIOR EXPANSION JOINT PLAN DETAIL
1" = 1'-0" A101B

B1

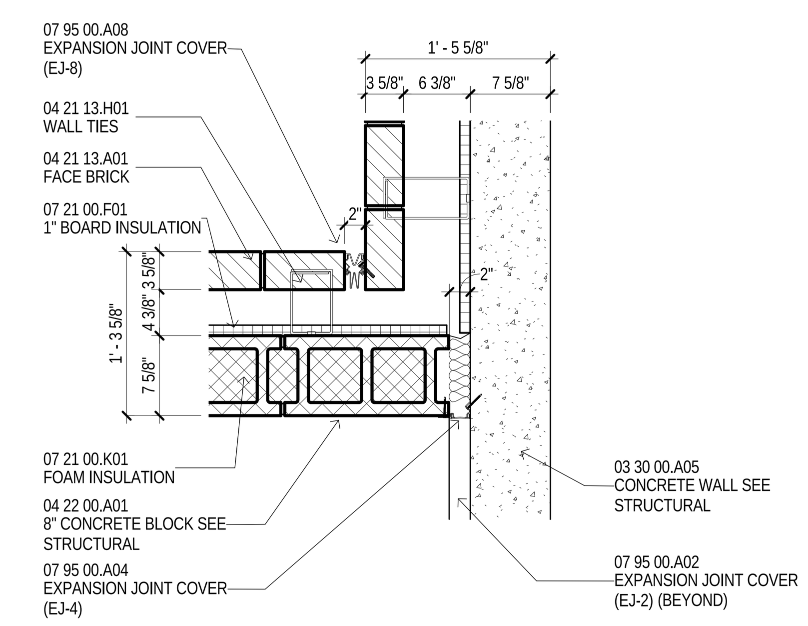

2 — EXTERIOR EXPANSION JOINT PLAN DETAIL
1" = 1'-0" A101B

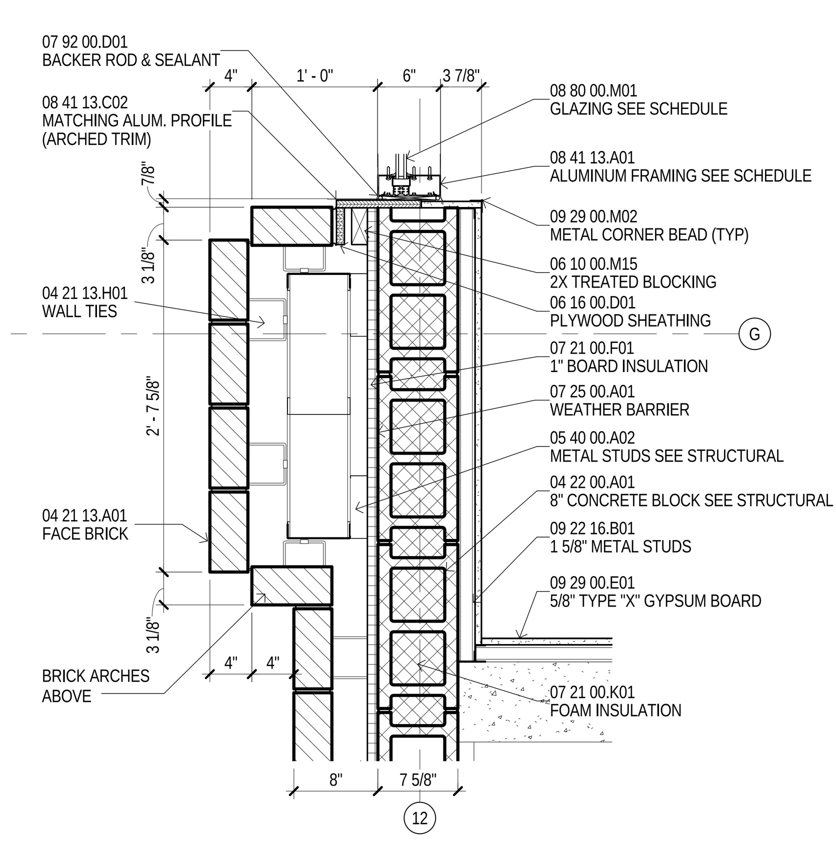

1 — PORTAL ARCH PLAN DETAIL
1" = 1'-0" A101B

MATERIAL KEYING

03 30 00.A05	CONCRETE WALL SEE STRUCTURAL
04 21 13.A01	FACE BRICK
04 21 13.H01	WALL TIES
04 22 00.A01	8" CONCRETE BLOCK SEE STRUCTURAL
04 72 00.A01	CAST STONE COLUMN COVER
04 72 00.A03	CAST STONE COLUMN COVER ASSEMBLY #2
05 12 00.B01	TUBE COLUMN SEE STRUCTURAL
05 40 00.A02	METAL STUDS SEE STRUCTURAL
06 10 00.M15	2X TREATED BLOCKING
06 16 00.A04	5/8" EXTERIOR GYPSUM SHEATHING
06 16 00.D01	PLYWOOD SHEATHING
07 21 00.B01	R-19 BATT INSULATION
07 21 00.F01	1" BOARD INSULATION
07 21 00.K01	FOAM INSULATION
07 25 00.A01	WEATHER BARRIER
07 92 00.D01	BACKER ROD & SEALANT
07 95 00.A01	EXPANSION JOINT COVER (EJ-1)
07 95 00.A02	EXPANSION JOINT COVER (EJ-2)
07 95 00.A03	EXPANSION JOINT COVER (EJ-3)
07 95 00.A04	EXPANSION JOINT COVER (EJ-4)
07 95 00.A07	EXPANSION JOINT COVER (EJ-7)
07 95 00.A08	EXPANSION JOINT COVER (EJ-8)
08 41 13.A01	ALUMINUM FRAMING SEE SCHEDULE
08 41 13.C02	MATCHING ALUM. PROFILE
08 80 00.M01	GLAZING SEE SCHEDULE
09 22 16.B01	1 5/8" METAL STUDS
09 22 16.D10	3 5/8" METAL STUDS @ 16" O.C.
09 22 16.F10	6" METAL STUDS @ 16" O.C.
09 29 00.E01	5/8" TYPE "X" GYPSUM BOARD
09 29 00.M02	METAL CORNER BEAD (TYP)
14 21 00.A01	ELEVATOR

GENERAL NOTES

A UNLESS SPECIFICALLY NOTED OTHERWISE - INTERIOR DIMENSIONS ARE TO FACE OF STUD, FACE OF CMU OR FACE OF CONCRETE WHERE INDICATED. WHERE FACE OF FINISH OR CLEAR DIMENSIONS ARE INDICATED FOR COORDINATION PURPOSES OR TO DESIGNATE REQUIRED CODE CLEARANCES, THE DIMENSION IS TYPICALLY DESIGNATED AS "FOF" (FACE OF FINISH) OR "CLEAR".

B CONTRACTOR RESPONSIBLE FOR FIELD MEASUREMENTS ON OVERALL DIMENSIONS.

C ROUGH-IN AND CLEARANCE DIMENSIONS, BLOCKING AND ANCHORAGE FOR SHOWER UNITS, (AS WELL AS LAUNDRY EQUIPMENT, APPLIANCES, AND SIMILAR BUILT-IN OR DIMENSIONALLY CRITICAL ITEMS) IS TO BE PROVIDED PER THE MANUFACTURER'S WRITTEN INSTALLATION INSTRUCTIONS.

D DIMENSIONS INDICATED AT SHOWER FIXTURES ARE APPROXIMATE. PRIOR TO BEGINNING PARTITION LAYOUT WORK OBTAIN ACTUAL SAMPLES OF EACH PREFABRICATED SHOWER ENCLOSURE AND CONSTRUCT MOCK-UPS OF EACH TYPICAL CONDITION TO ESTABLISH EXACT ROUGH-IN DIMENSIONS AND FRAMING, BLOCKING AND FINISH DETAILS.

E SHOWER UNITS SHALL BE GROUTED SOLID UNDERNEATH - FILL VOID BETWEEN FLOOR SLAB AND FLOOR OF SHOWER.

F DWELLING UNITS DESIGNATED AS "HC" ON THE PLANS ARE UNITS WITH MOBILITY FEATURES IN ACCORDANCE WITH APPLICABLE ACCESSIBILITY CODES. ROOMS NOTED "HC-R" ARE PROVIDED WITH ROLL-IN TYPE SHOWER ENCLOSURESS. ROOMS NOTED AS "HC-T" ARE PROVIDED WITH TRANSFER TYPE SHOWER ENCLOSURES. UNITS DESIGNATED WITH "C" ARE UNITS TO BE PROVIDED WITH COMMUNICATIONS FEATURES.

G ALL DWELLING UNITS NOT DESIGNATED AS "HC" ARE TO BE CONSTRUCTED AS "TYPE B" UNITS PER CHAPTER 11 OF ICC AND APPLICABLE PROVISIONS OF ICC/ANSI A117.1 AND THE FAIR HOUSING ACT DESIGN MANUAL.

H EXCEPT AS NOTED OTHERWISE, LAUNDRY EQUIPMENT AND RESIDENTIAL APPLIANCES ARE NOT IN CONTRACT (NIC) - LAUNDRY EQUIPMENT WILL BE FURNISHED AND INSTALLED BY THE OWNER'S SEPARATE LAUNDRY CONTRACTOR (WITH THE EXCEPTION OF STAFF APARTMENT LAUNDRY EQUIPMENT). RESIDENTIAL KITCHEN EQUIPMENT (WITH THE EXCEPTION OF WALL OVENS AND RANGE HOODS) WILL BE OWNER FURNISHED AND CONTRACTOR INSTALLED. PROVIDE ROUGH-IN FOR LAUNDRY EQUIPMENT AND RESIDENTIAL KITCHEN APPLIANCES. REFER TO ELECTRICAL DRAWINGS FOR POWER AND DATA - REFER TO PLUMBING DRAWINGS FOR GAS, WATER AND DRAINAGE - REFER TO MECHANICAL DRAWING FOR EXHAUSTING AS APPLICABLE. COORDINATE ROUGH-IN REQUIREMENTS WITH THE OWNER AND OBTAIN MANUFACTURER'S REQUIREMENTS PRIOR TO COMMENCEMENT OF ROUGH-IN WORK.

I LOCATE WHEELCHAIR ACCESSIBLE WATER CLOSETS 17" FROM CENTERLINE OF WATER CLOSET TO FACE OF FINISH AT ADJACENT WALL, TYPICAL. FLUSH HANDLES TO BE LOCATED ON THE WIDE (OPEN) SIDE OF THE FIXTURE, TYPICAL.

J PROVIDE FLOOR DRAINS (FD) AT ROLL-IN (R) AND TRANSFER (T) SHOWERS. REFER TO PLUMBING DRAWINGS, SLOPE FLOORS TO DRAIN.

K WHERE NOTED AT HANDICAP ACCESSIBLE DWELLING UNITS, PROVIDE REMOVABLE BASE CABINETS AT KITCHEN AND BATHROOM SINKS COMPLYING WITH THE REQUIREMENTS OF ADA STANDARDS FOR ACCESSIBLE DESIGN (SECTION 606.2 EXCEPTION NO. 3).

L CONTRACTOR TO PROVIDE 12 GAGE METAL BLOCKING IN STUD WALLS FOR ANCHORAGE OF WALL MOUNTED ITEMS INCLUDING BUT NOT LIMITED TO TOILET ACCESSORIES, WALL CABINETS, WALL MOUNTED TV'S, SHELVING, TOILET PARTITIONS, OWNER FURNISHED EQUIPMENT INDICATED AND SIMILAR ITEMS. FOR "TYPE B" DWELLING UNITS, PROVIDE METAL BLOCKING IN WALLS FOR FUTURE INSTALLATIONS AS INDICATED. FOR WALL MOUNTED TV'S IN LOUNGES, PROVIDE METAL BLOCKING 24" ABOVE AND BELOW ELECTRICAL JUNCTION BOXES.

M REFER TO A026 FOR DESCRIPTION OF ALL PARTITION TYPES.

N REFER TO A100 (1/8" FLOOR PLANS) SERIES DRAWINGS AND A300 SERIES DRAWINGS (ENLARGED PLANS) FOR PARTITION TYPE LOCATIONS.

O REFER TO LS SERIES DRAWING (LIFE SAFETY PLANS) FOR LOCATIONS OF FIRE RATED WALLS AND PARTITIONS.

P REFER TO A000 SERIES DRAWINGS FOR WINDOW TYPES AND DOOR TYPES, SCHEDULES AND DETAILS.

Q REFER TO A000 SERIES DRAWINGS FOR INTERIOR FINISH SCHEDULES.

R REFER TO A100 SERIES DRAWINGS (ENLARGED PLANS) FOR ADDITIONAL PLAN NOTES.

S REFER TO PROJECT MANUAL SECTION 10 28 00 FOR TOILET ACCESSORY SCHEDULE.

REGISTERED ARCHITECT Thomas D. Saunders 3693 Tupelo, MS STATE OF MISSISSIPPI
04 march 2013

THE McCARTY COMPANY
DESIGN GROUP, P.A.
MAILING ADDRESS: P.O. BOX 440 TUPELO, MS 38802
OFFICE ADDRESS: 533 WEST MAIN STREET TUPELO, MS 38804
TELEPHONE: (662) 844-4400
FAX: (662) 844-0500

DESIGN ARCHITECT
Hanbury Evans Wright Vlattas + Company
120 Atlantic Street
Norfolk, VA 23510
757.321.9600
www.hewv.com

PROJECT TITLE
USM - CENTURY PARK SOUTH
IHL# 208-297
HATTIESBURG, MISSISSIPPI

THE UNIVERSITY OF SOUTHERN MISSISSIPPI

PROJECT NO:
- 2012020

DRAWN BY:
- MPS, JPH

CHECKED BY:
- JPH

DATE ISSUED:
- 04 MAR 2013

REVISIONS & ADDENDUMS

SHEET TITLE
PLAN DETAILS

SHEET NUMBER
A335

Plot Date: BID DOCUMENTS - 04 MAR 2013

3/11/2013 5:31:52 AM

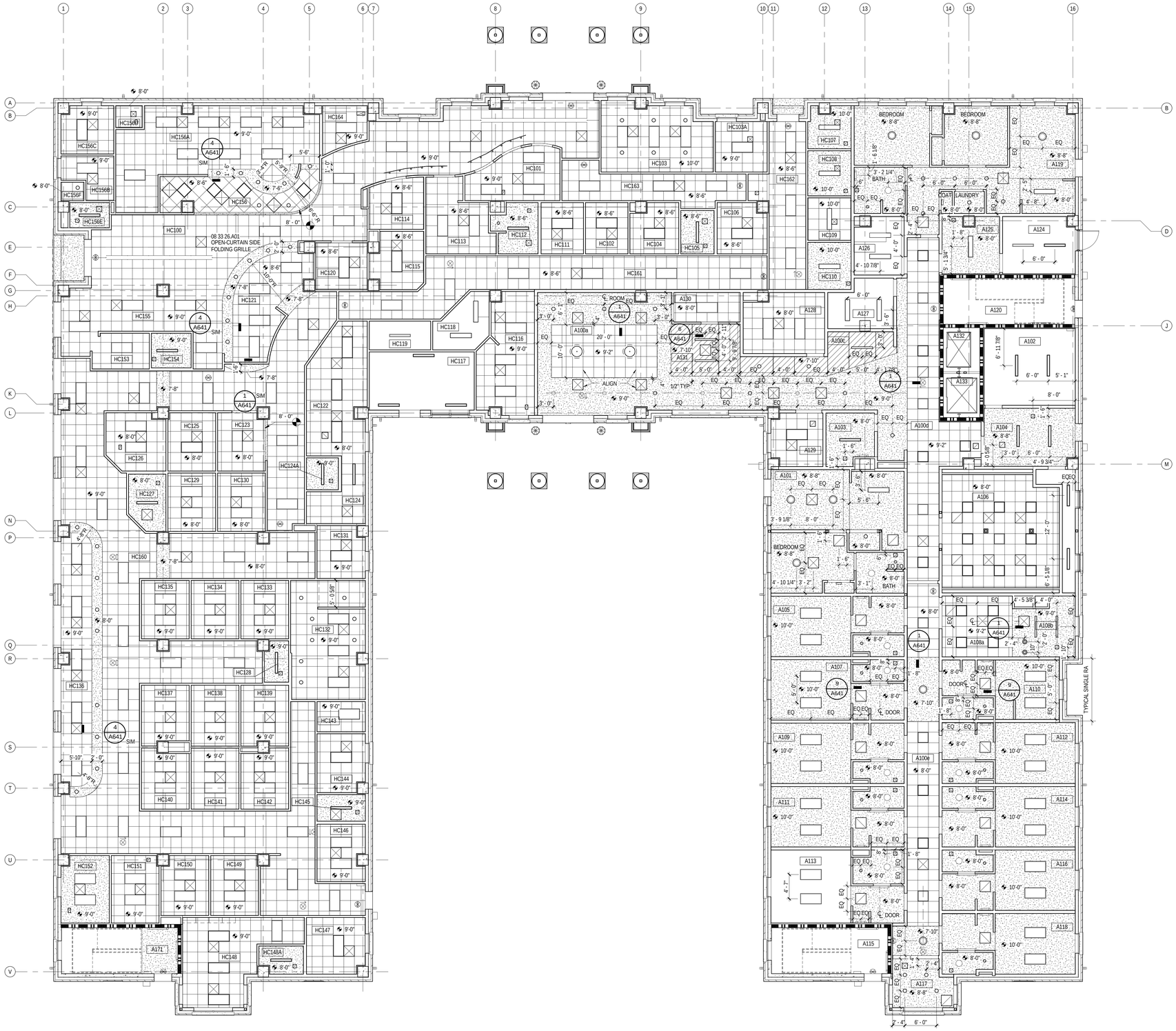

1 FIRST FLOOR REFLECTED CEILING PLAN - BUILDING A

1/8" = 1'-0"

NORTH

0' 8' 16' 24'

REFLECTED CEILING PLAN LEGEND

- 09 51 13.C01 2x2 LAY-IN CEILING
- 09 29 00 GYPSUM BOARD CEILING, PAINTED
- 06 41 16.A04 PLASTIC LAMINATE CLAD PLYWOOD PANEL. SEE DETAILS A461
- 07 24 19.A05 EIFS FINISH ON 5/8" EXT. GYPSUM SHEATHING
- 06 16 00.A05 ALUM. CONTROL JOINT
- HVAC DIFFUSER / PERFORATED GRILLE, SUPPLY AIR - SEE MECHANICAL
- HVAC DIFFUSER / PERFORATED GRILLE, RETURN AIR - SEE MECHANICAL
- HVAC EXHAUST GRILLE - SEE MECHANICAL DRAWINGS
- EXIT SIGNAGE
- LAY-IN FLUORESCENT LIGHT FIXTURE
- SUSPENDED LIGHT FIXTURE
- SUSPENDED LIGHT FIXTURE
- SUSPENDED LIGHT FIXTURE (BUILDING C ONLY)
- RECESSED/FLUSH-MOUNTED LIGHT FIXTURE
- WALL-MOUNTED LIGHT FIXTURE
- DOWN LIGHT FIXTURE
- SURFACE MOUNTED DECORATIVE LIGHT FIXTURE
- TRACK LIGHT FIXTURES
- EXTERIOR LIGHT FIXTURE
- CEILING FAN
- EJ 07.95.00 #### EXPANSION JOINT COVER (EJ-#)
- CJ CONTROL JOINT

GENERAL NOTES - REFLECTED CEILING PLAN

NEW WORK PLAN NOTES - REFLECTED CEILING PLANS

GENERAL REFLECTED CEILING PLAN NOTES

A REFLECTED CEILING PLAN NOTES BELOW ARE REFERENCED ON THE 1/8" SCALE REFLECTED CEILING PLANS (A400 SERIES) FOR RESIDENTIAL AREAS. REFER TO THE 1/8" SCALE FLOOR PLANS (A100 SERIES) DRAWINGS FOR ADDITIONAL PLAN NOTES.

B UNLESS NOTED OTHERWISE, DIMENSIONS INDICATED ON THE REFLECTED CEILING PLANS ARE TO THE FACE OF FINISH OR CENTERLINE OF FIXTURE AS APPLICABLE.

C REFER TO A000 SERIES DRAWINGS FOR PARTITION TYPES AND FINISH SCHEDULES.

D CENTER AND SYMMETRICALLY LOCATE LIGHT FIXTURES IN ROOM OR DEFINED AREA OF ROOM OR SOFFIT UNLESS INDICATED OTHERWISE.

E ALL DEVICES MOUNTED IN OR ON ACOUSTIC CEILING TILES ARE TO BE CENTERED.

F SPRINKLER HEADS ARE TO BE GENERALLY LOCATED IN CENTERS OF ACOUSTIC CEILING TILES AND SPACED SYMMETRICALLY WITH RESPECT TO LIGHT FIXTURES, GRILLES, DIFFUSER AND OTHER CEILING ELEMENTS TO THE GREATEST EXTENT PRACTICAL.

G REFER TO APPLICABLE MECHANICAL AND ELECTRICAL DRAWINGS FOR COMPLETE LAYOUT OF LIGHT FIXTURES, GRILLES AND DIFFUSERS IN SERVICE AND UTILITY SPACES (INCLUDING ATTICS).

H AT 5TH FLOOR ACOUSTICAL TILE CEILINGS, ALSO PROVIDE 5/8" TYPE "X" GYPSUM BOARD ON 7/8" RESILIENT FURRING CHANNELS ATTACHED TO ROOM TRUSSES ABOVE. CARRY GYPSUM BOARD AT PARTITIONS AT ROOM PERIMITER UP TO TOP OF WALL TO FULL CREATE ENCLOSURE.

I AT GYPSUM BOARD CEILING FRAMING ADJACENT TO FAN COIL UNITS, PROVIDE METAL FRAMMING AROUND UNITS AS REQUIRED - SEE MECHANICAL DRAWINGS

NEW WORK NOTES

1 5/8" SUSPENDED GYPSUM WALL BOARD SOFFIT – PAINTED – TYPICAL AT STUDENT ROOM ENTRANCES AND BATHS.

KEY PLAN

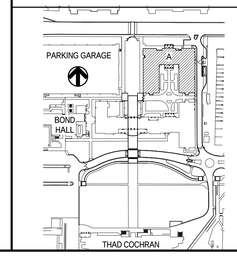

THE McCARTY COMPANY
DESIGN GROUP, P.A.
TELEPHONE: (662) 844-4400
FAX: (662) 844-0500
OFFICE ADDRESS: 535 WEST MAIN STREET TUPELO, MS 38804
MAILING ADDRESS: P.O. BOX 440 TUPELO, MS 38802

DESIGN ARCHITECT
Hanbury Evans Wright Vlattas + Company
120 Atlantic Street
Norfolk, VA 23510
757.321.9600
www.hewv.com

PROJECT TITLE
USM - CENTURY PARK SOUTH
IHL# 208-297
HATTIESBURG, MISSISSIPPI

THE UNIVERSITY OF SOUTHERN MISSISSIPPI

PROJECT NO: 2012020
DRAWN BY: Author
CHECKED BY: JTG
DATE ISSUED: 04 MAR 2013

REVISIONS & ADDENDUMS

SHEET TITLE
BUILDING A - FIRST FLOOR REFLECTED CEILING PLAN

SHEET NUMBER
A401A

Plot Date: BID DOCUMENTS - 04 MARCH 2013

3/9/2013 7:00:47 AM

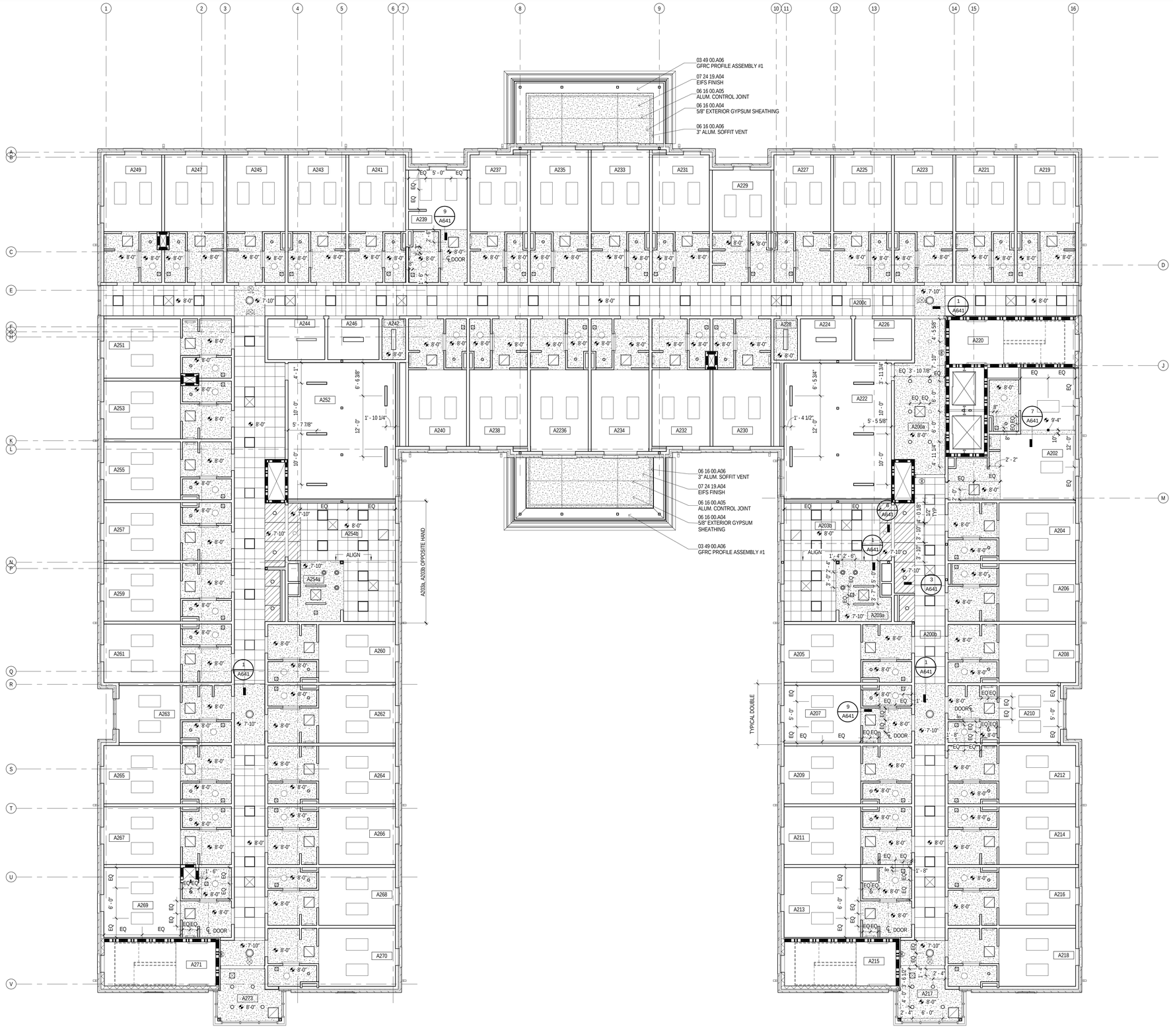

SECOND FLOOR REFLECTED CEILING PLAN - BUILDING A

1 / 1/8" = 1'-0"

NORTH

REFLECTED CEILING PLAN LEGEND

- 09 51 13.C01 — 2x2 LAY-IN CEILING
- 09 29 00 — GYPSUM BOARD CEILING, PAINTED
- 06 41 16.A04 — PLASTIC LAMINATE CLAD PLYWOOD PANEL. SEE DETAILS A461
- 07 24 19.A05 — EIFS FINISH ON 5/8" EXT. GYPSUM SHEATHING
- 06 16 00.A05 — ALUM. CONTROL JOINT
- HVAC DIFFUSER / PERFORATED GRILLE, SUPPLY AIR - SEE MECHANICAL
- HVAC DIFFUSER / PERFORATED GRILLE, RETURN AIR - SEE MECHANICAL
- HVAC EXHAUST GRILLE - SEE MECHANICAL DRAWINGS
- EXIT SIGNAGE
- LAY-IN FLUORESCENT LIGHT FIXTURE
- SUSPENDED LIGHT FIXTURE
- SUSPENDED LIGHT FIXTURE
- SUSPENDED LIGHT FIXTURE (BUILDING C ONLY)
- RECESSED/FLUSH-MOUNTED LIGHT FIXTURE
- WALL-MOUNTED LIGHT FIXTURE
- DOWN LIGHT FIXTURE
- SURFACE MOUNTED DECORATIVE LIGHT FIXTURE
- TRACK LIGHT FIXTURES
- EXTERIOR LIGHT FIXTURE
- CEILING FAN
- EJ — 07.95.00 #### EXPANSION JOINT COVER (EJ-#)
- CJ — CONTROL JOINT

GENERAL NOTES - REFLECTED CEILING PLAN

NEW WORK PLAN NOTES - REFLECTED CEILING PLANS

GENERAL REFLECTED CEILING PLAN NOTES

A REFLECTED CEILING PLAN NOTES BELOW ARE REFERENCED ON THE 1/8" SCALE REFLECTED CEILING PLANS (A400 SERIES) FOR RESIDENTIAL AREAS. REFER TO THE 1/8" SCALE FLOOR PLANS (A100 SERIES) DRAWINGS FOR ADDITIONAL PLAN NOTES.

B UNLESS NOTED OTHERWISE, DIMENSIONS INDICATED ON THE REFLECTED CEILING PLANS ARE TO THE FACE OF FINISH OR CENTERLINE OF FIXTURE AS APPLICABLE.

C REFER TO A000 SERIES DRAWINGS FOR PARTITION TYPES AND FINISH SCHEDULES.

D CENTER AND SYMMETRICALLY LOCATE LIGHT FIXTURES IN ROOM OR DEFINED AREA OF ROOM OR SOFFIT UNLESS INDICATED OTHERWISE.

E ALL DEVICES MOUNTED IN OR ON ACOUSTIC CEILING TILES ARE TO BE CENTERED.

F SPRINKLER HEADS ARE TO BE GENERALLY LOCATED IN CENTERS OF ACOUSTIC CEILING TILES AND SPACED SYMMETRICALLY WITH RESPECT TO LIGHT FIXTURES, GRILLES, DIFFUSER AND OTHER CEILING ELEMENTS TO THE GREATEST EXTENT PRACTICAL.

G REFER TO APPLICABLE MECHANICAL AND ELECTRICAL DRAWINGS FOR COMPLETE LAYOUT OF LIGHT FIXTURES, GRILLES AND DIFFUSERS IN SERVICE AND UTILITY SPACES (INCLUDING ATTICS).

H AT 5TH FLOOR ACOUSTICAL TILE CEILINGS, ALSO PROVIDE 5/8" TYPE "X" GYPSUM BOARD ON 7/8" RESILIENT FURRING CHANNELS ATTACHED TO ROOM TRUSSES ABOVE. CARRY GYPSUM BOARD AT PARTITIONS AT ROOM PERIMITER UP TO TOP OF WALL TO FULL CREATE ENCLOSURE.

I AT GYPSUM BOARD CEILING FRAMING ADJACENT TO FAN COIL UNITS, PROVIDE METAL FRAMING AROUND UNITS AS REQUIRED - SEE MECHANICAL DRAWINGS

NEW WORK NOTES

1 5/8" SUSPENDED GYPSUM WALL BOARD SOFFIT – PAINTED – TYPICAL AT STUDENT ROOM ENTRANCES AND BATHS.

KEY PLAN

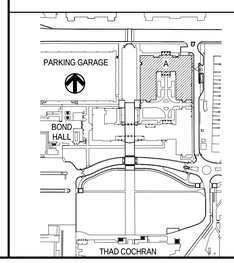

THE McCARTY COMPANY
DESIGN GROUP, P.A.
OFFICE ADDRESS: 533 WEST MAIN STREET TUPELO, MS 38804
MAILING ADDRESS: P.O. BOX 443 TUPELO, MS 38802
TELEPHONE: (662) 844-4403
FAX: (662) 844-0503

DESIGN ARCHITECT
Hanbury Evans Wright Vlattas + Company
120 Atlantic Street
Norfolk, VA 23510
757.321.9600
www.hewv.com

PROJECT TITLE
USM - CENTURY PARK SOUTH
IHL# 208-297
HATTIESBURG, MISSISSIPPI

THE UNIVERSITY OF SOUTHERN MISSISSIPPI

PROJECT NO: 2012020
DRAWN BY: Author
CHECKED BY: JTG
DATE ISSUED: 04 MAR 2013

REVISIONS & ADDENDUMS

SHEET TITLE
BUILDING A - SECOND FLOOR REFLECTED CEILING PLAN

SHEET NUMBER
A402A

3/9/2013 7:02:01 AM

Plot Date: BID DOCUMENTS - 04 MARCH 2013

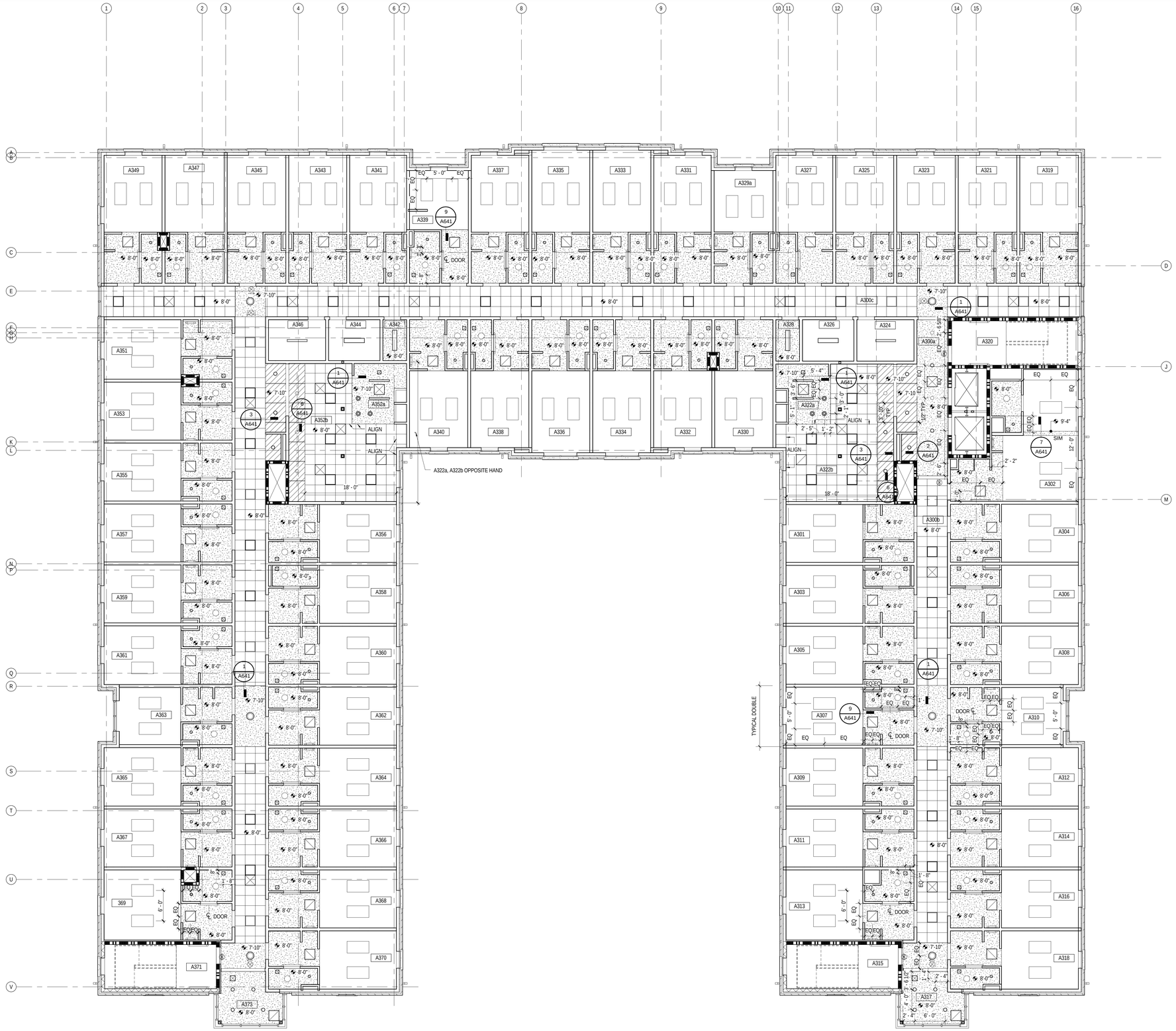

1 THIRD & FOURTH FLOOR REFLECTED CEILING PLAN
1/8" = 1'-0"

NORTH

REFLECTED CEILING PLAN LEGEND

	09 51 13.C01 2x2 LAY-IN CEILING
	09 29 00 GYPSUM BOARD CEILING, PAINTED
	06 41 16.A04 PLASTIC LAMINATE CLAD PLYWOOD PANEL. SEE DETAILS A461
	07 24 19.A05 EIFS FINISH ON 5/8" EXT. GYPSUM SHEATHING
	06 16 00.A05 ALUM. CONTROL JOINT
	HVAC DIFFUSER / PERFORATED GRILLE, SUPPLY AIR - SEE MECHANICAL
	HVAC DIFFUSER / PERFORATED GRILLE, RETURN AIR - SEE MECHANICAL
	HVAC EXHAUST GRILLE - SEE MECHANICAL DRAWINGS
	EXIT SIGNAGE
	LAY-IN FLUORESCENT LIGHT FIXTURE
	SUSPENDED LIGHT FIXTURE
	SUSPENDED LIGHT FIXTURE
	SUSPENDED LIGHT FIXTURE (BUILDING C ONLY)
	RECESSED/FLUSH-MOUNTED LIGHT FIXTURE
	WALL-MOUNTED LIGHT FIXTURE
	DOWN LIGHT FIXTURE
	SURFACE MOUNTED DECORATIVE LIGHT FIXTURE
	TRACK LIGHT FIXTURES
	EXTERIOR LIGHT FIXTURE
	CEILING FAN
EJ	07.95.00 #### EXPANSION JOINT COVER (EJ-#)
CJ	CONTROL JOINT

GENERAL NOTES - REFLECTED CEILING PLAN

NEW WORK PLAN NOTES - REFLECTED CEILING PLANS

GENERAL REFLECTED CEILING PLAN NOTES

A REFLECTED CEILING PLAN NOTES BELOW ARE REFERENCED ON THE 1/8" SCALE REFLECTED CEILING PLANS (A400 SERIES) FOR RESIDENTIAL AREAS. REFER TO THE 1/8" SCALE FLOOR PLANS (A100 SERIES) DRAWINGS FOR ADDITIONAL PLAN NOTES.

B UNLESS NOTED OTHERWISE, DIMENSIONS INDICATED ON THE REFLECTED CEILING PLANS ARE TO THE FACE OF FINISH OR CENTERLINE OF FIXTURE AS APPLICABLE.

C REFER TO A000 SERIES DRAWINGS FOR PARTITION TYPES AND FINISH SCHEDULES.

D CENTER AND SYMMETRICALLY LOCATE LIGHT FIXTURES IN ROOM OR DEFINED AREA OF ROOM OR SOFFIT UNLESS INDICATED OTHERWISE.

E ALL DEVICES MOUNTED IN OR ON ACOUSTIC CEILING TILES ARE TO BE CENTERED.

F SPRINKLER HEADS ARE TO BE GENERALLY LOCATED IN CENTERS OF ACOUSTIC CEILING TILES AND SPACED SYMMETRICALLY WITH RESPECT TO LIGHT FIXTURES, GRILLES, DIFFUSER AND OTHER CEILING ELEMENTS TO THE GREATEST EXTENT PRACTICAL.

G REFER TO APPLICABLE MECHANICAL AND ELECTRICAL DRAWINGS FOR COMPLETE LAYOUT OF LIGHT FIXTURES, GRILLES AND DIFFUSERS IN SERVICE AND UTILITY SPACES (INCLUDING ATTICS).

H AT 5TH FLOOR ACOUSTICAL TILE CEILINGS, ALSO PROVIDE 5/8" TYPE "X" GYPSUM BOARD ON 7/8" RESILIENT FURRING CHANNELS ATTACHED TO ROOM TRUSSES ABOVE. CARRY GYPSUM BOARD AT PARTITIONS AT ROOM PERIMITER UP TO TOP OF WALL TO FULL CREATE ENCLOSURE.

I AT GYPSUM BOARD CEILING FRAMING ADJACENT TO FAN COIL UNITS, PROVIDE METAL FRAMING AROUND UNITS AS REQUIRED - SEE MECHANICAL DRAWINGS

NEW WORK NOTES

1 5/8" SUPPLIED GYPSUM WALL BOARD SOFFIT – PAINTED – TYPICAL AT STUDENT ROOM ENTRANCES AND BATHS.

KEY PLAN

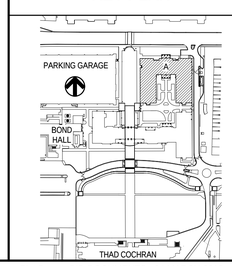

THE McCARTY COMPANY
DESIGN GROUP, P.A.
OFFICE ADDRESS: 533 WEST MAIN STREET TUPELO, MS 38804
MAILING ADDRESS: P.O. BOX 440 TUPELO, MS 38802
TELEPHONE: (662) 844-4400
FAX: (662) 844-0503

DESIGN ARCHITECT
Hanbury Evans Wright Vlattas + Company
120 Atlantic Street
Norfolk, VA 23510
757.321.9600
www.hewv.com

PROJECT TITLE
USM - CENTURY PARK SOUTH
IHL# 208-297
HATTIESBURG, MISSISSIPPI

THE UNIVERSITY OF SOUTHERN MISSISSIPPI

PROJECT NO: 2012020
DRAWN BY: Author
CHECKED BY: JTG
DATE ISSUED: 04 MAR 2013

REVISIONS & ADDENDUMS

SHEET TITLE
BUILDING A - THIRD & FOURTH FLOOR REFLECTED CEILING PLAN

SHEET NUMBER
A403A

Plot Date: BID DOCUMENTS - 04 MARCH 2013

3/9/2013 7:03:30 AM

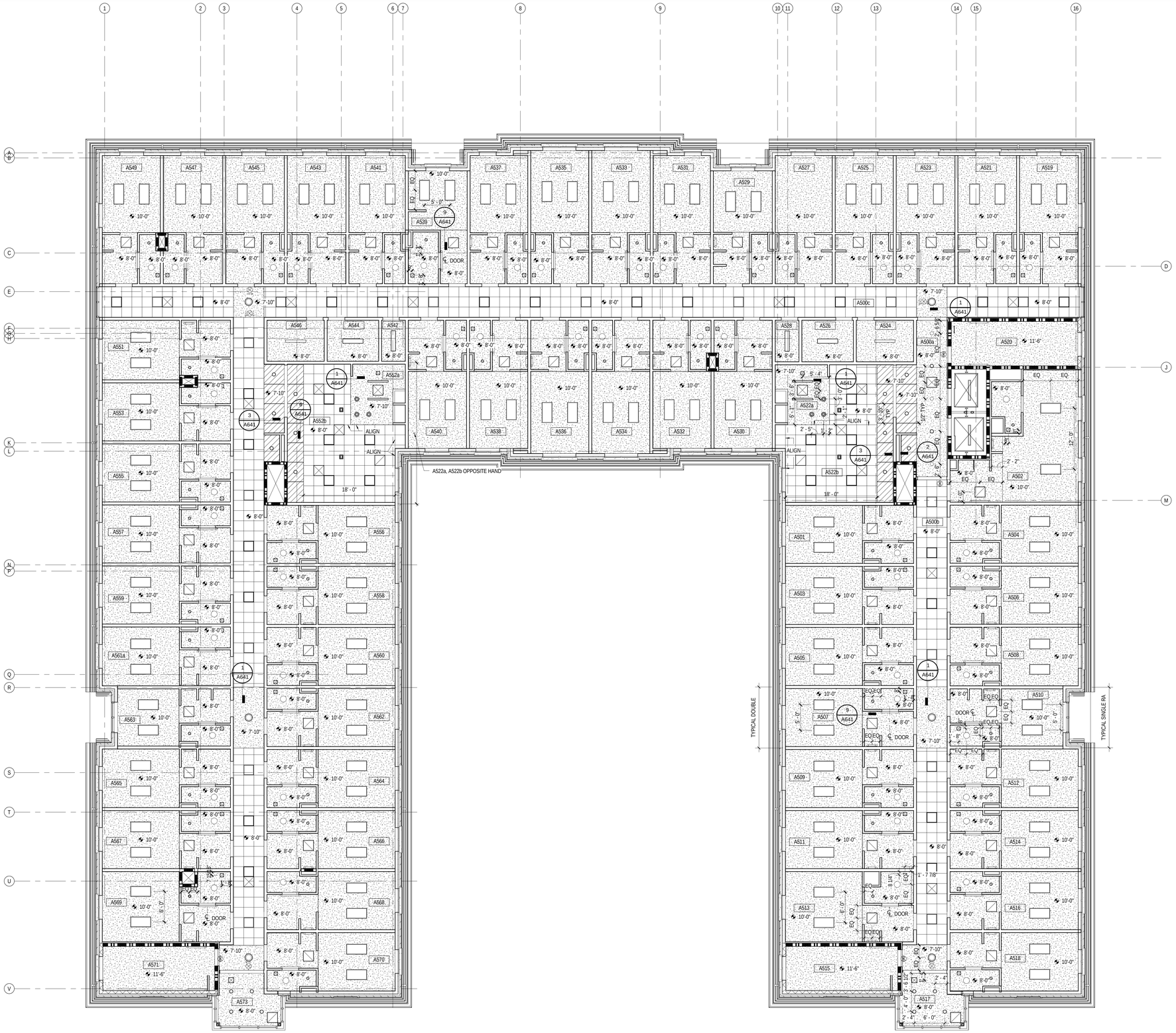

1 FIFTH FLOOR REFLECTED CEILING PLAN
1/8" = 1'-0"

NORTH

0' 8' 16' 24'

3/9/2013 7:08:21 AM

REFLECTED CEILING PLAN LEGEND

- 09 51 13.C01 2x2 LAY-IN CEILING
- 09 29 00 GYPSUM BOARD CEILING, PAINTED
- 06 41 16.A04 PLASTIC LAMINATE CLAD PLYWOOD PANEL. SEE DETAILS A461
- 07 24 19.A05 EIFS FINISH ON 5/8" EXT. GYPSUM SHEATHING
- 06 16 00.A05 ALUM. CONTROL JOINT
- HVAC DIFFUSER / PERFORATED GRILLE, SUPPLY AIR - SEE MECHANICAL
- HVAC DIFFUSER / PERFORATED GRILLE, RETURN AIR - SEE MECHANICAL
- HVAC EXHAUST GRILLE - SEE MECHANICAL DRAWINGS
- EXIT SIGNAGE
- LAY-IN FLUORESCENT LIGHT FIXTURE
- SUSPENDED LIGHT FIXTURE
- SUSPENDED LIGHT FIXTURE
- SUSPENDED LIGHT FIXTURE (BUILDING C ONLY)
- RECESSED/FLUSH-MOUNTED LIGHT FIXTURE
- WALL-MOUNTED LIGHT FIXTURE
- DOWN LIGHT FIXTURE
- SURFACE MOUNTED DECORATIVE LIGHT FIXTURE
- TRACK LIGHT FIXTURES
- EXTERIOR LIGHT FIXTURE
- CEILING FAN
- EJ 07.95.00 #### EXPANSION JOINT COVER (EJ-#)
- CJ CONTROL JOINT

GENERAL NOTES - REFLECTED CEILING PLAN

NEW WORK PLAN NOTES - REFLECTED CEILING PLANS

GENERAL REFLECTED CEILING PLAN NOTES

A REFLECTED CEILING PLAN NOTES BELOW ARE REFERENCED ON THE 1/8" SCALE REFLECTED CEILING PLANS (A400 SERIES) FOR RESIDENTIAL AREAS. REFER TO THE 1/8" SCALE FLOOR PLANS (A100 SERIES) DRAWINGS FOR ADDITIONAL PLAN NOTES.

B UNLESS NOTED OTHERWISE, DIMENSIONS INDICATED ON THE REFLECTED CEILING PLANS ARE TO THE FACE OF FINISH OR CENTERLINE OF FIXTURE AS APPLICABLE.

C REFER TO A000 SERIES DRAWINGS FOR PARTITION TYPES AND FINISH SCHEDULES.

D CENTER AND SYMMETRICALLY LOCATE LIGHT FIXTURES IN ROOM OR DEFINED AREA OF ROOM OR SOFFIT UNLESS INDICATED OTHERWISE.

E ALL DEVICES MOUNTED IN OR ON ACOUSTIC CEILING TILES ARE TO BE CENTERED.

F SPRINKLER HEADS ARE TO BE GENERALLY LOCATED IN CENTERS OF ACOUSTIC CEILING TILES AND SPACED SYMMETRICALLY WITH RESPECT TO LIGHT FIXTURES, GRILLES, DIFFUSER AND OTHER CEILING ELEMENTS TO THE GREATEST EXTENT PRACTICAL.

G REFER TO APPLICABLE MECHANICAL AND ELECTRICAL DRAWINGS FOR COMPLETE LAYOUT OF LIGHT FIXTURES, GRILLES AND DIFFUSERS IN SERVICE AND UTILITY SPACES (INCLUDING ATTICS).

H AT 5TH FLOOR ACOUSTICAL TILE CEILINGS, ALSO PROVIDE 5/8" TYPE "X" GYPSUM BOARD ON 7/8" RESILIENT FURRING CHANNELS ATTACHED TO ROOM TRUSSES ABOVE. CARRY GYPSUM BOARD AT PARTITIONS AT ROOM PERIMITER UP TO TOP OF WALL TO FULL CREATE ENCLOSURE.

I AT GYPSUM BOARD CEILING FRAMING ADJACENT TO FAN COIL UNITS, PROVIDE METAL FRAMING AROUND UNITS AS REQUIRED - SEE MECHANICAL DRAWINGS

NEW WORK NOTES

1 5/8" SUSPENDED GYPSUM WALL BOARD SOFFIT – PAINTED – TYPICAL AT STUDENT ROOM ENTRANCES AND BATHS.

KEY PLAN

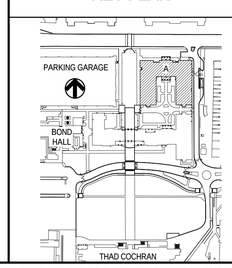

THE McCARTY COMPANY
DESIGN GROUP, P.A.
OFFICE ADDRESS: 533 WEST MAIN STREET TUPELO, MS 38804
MAILING ADDRESS: P.O. BOX 440 TUPELO, MS 38802
TELEPHONE: (662) 844-4400
FAX: (662) 844-0503

DESIGN ARCHITECT
Hanbury Evans Wright Vlattas + Company
120 Atlantic Street
Norfolk, VA 23510
757.321.9600
www.hewv.com

PROJECT TITLE
USM - CENTURY PARK SOUTH
IHL# 208-297
HATTIESBURG, MISSISSIPPI

THE UNIVERSITY OF SOUTHERN MISSISSIPPI

PROJECT NO: 2012020
DRAWN BY: Author
CHECKED BY: JTG
DATE ISSUED: 04 MAR 2013

REVISIONS & ADDENDUMS

SHEET TITLE
BUILDING A - FIFTH FLOOR REFLECTED CEILING PLAN

SHEET NUMBER
A405A

Plot Date: BID DOCUMENTS - 04 MARCH 2013

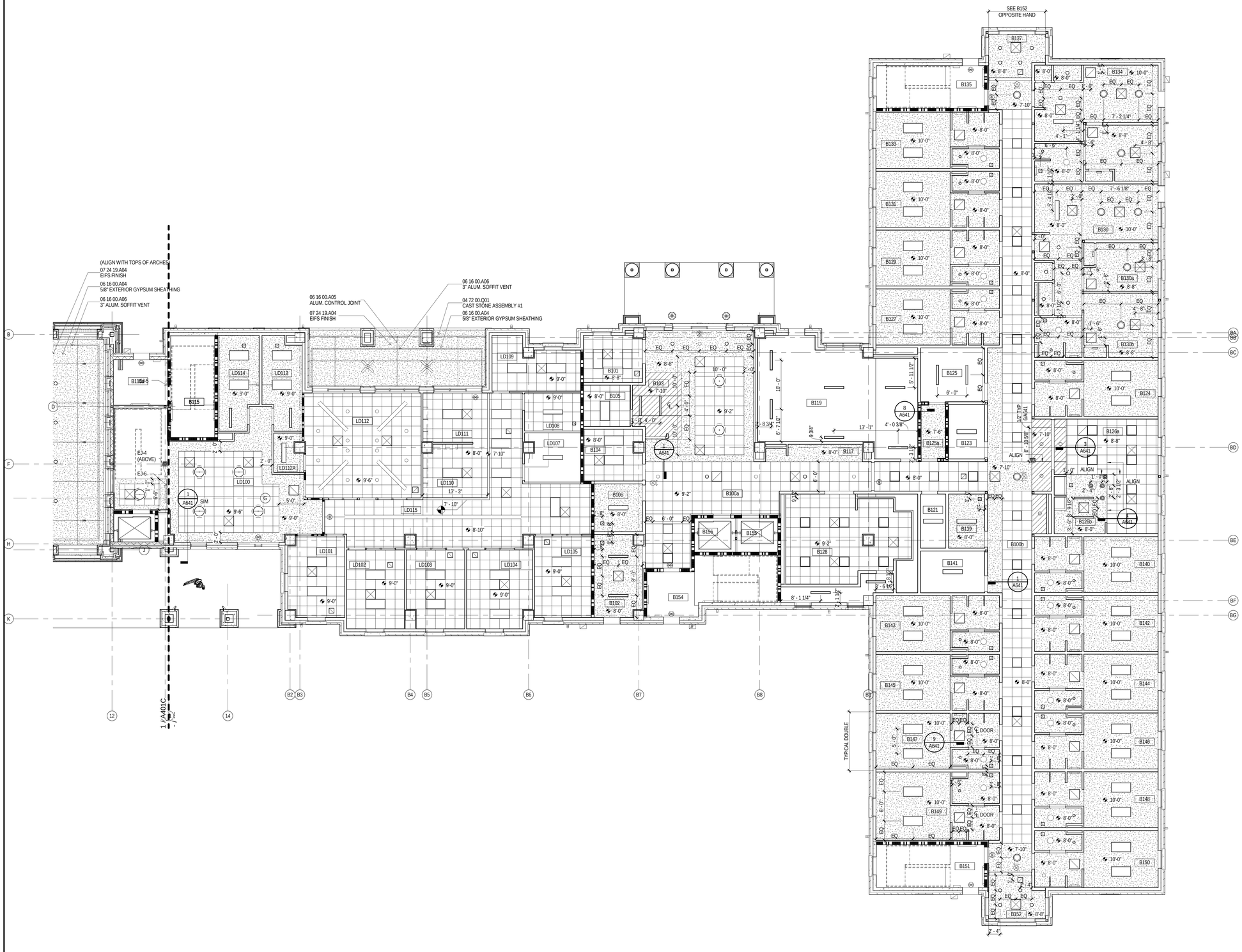

1 BUILDING B - FIRST FLOOR REFLECTED CEILING PLAN
1/8" = 1'-0"

NORTH

0' 8' 16' 24'

3/9/2013 7:17:55 AM

REFLECTED CEILING PLAN LEGEND

- 09 51 13.C01 2x2 LAY-IN CEILING
- 09 29 00 GYPSUM BOARD CEILING, PAINTED
- 06 41 16.A04 PLASTIC LAMINATE CLAD PLYWOOD PANEL. SEE DETAILS A461
- 07 24 19.A05 EIFS FINISH ON 5/8" EXT. GYPSUM SHEATHING
- 06 16 00.A05 ALUM. CONTROL JOINT
- HVAC DIFFUSER / PERFORATED GRILLE, SUPPLY AIR - SEE MECHANICAL
- HVAC DIFFUSER / PERFORATED GRILLE, RETURN AIR - SEE MECHANICAL
- HVAC EXHAUST GRILLE - SEE MECHANICAL DRAWINGS
- EXIT SIGNAGE
- LAY-IN FLUORESCENT LIGHT FIXTURE
- SUSPENDED LIGHT FIXTURE
- SUSPENDED LIGHT FIXTURE
- SUSPENDED LIGHT FIXTURE (BUILDING C ONLY)
- RECESSED/FLUSH-MOUNTED LIGHT FIXTURE
- WALL-MOUNTED LIGHT FIXTURE
- DOWN LIGHT FIXTURE
- SURFACE MOUNTED DECORATIVE LIGHT FIXTURE
- TRACK LIGHT FIXTURES
- EXTERIOR LIGHT FIXTURE
- CEILING FAN
- EJ 07.95.00 #### EXPANSION JOINT COVER (EJ-#)
- CJ CONTROL JOINT

GENERAL NOTES - REFLECTED CEILING PLAN

NEW WORK PLAN NOTES - REFLECTED CEILING PLANS

GENERAL REFLECTED CEILING PLAN NOTES

A REFLECTED CEILING PLAN NOTES BELOW ARE REFERENCED ON THE 1/8" SCALE REFLECTED CEILING PLANS (A400 SERIES) FOR RESIDENTIAL AREAS. REFER TO THE 1/8" SCALE FLOOR PLANS (A100 SERIES) DRAWINGS FOR ADDITIONAL PLAN NOTES.

B UNLESS NOTED OTHERWISE, DIMENSIONS INDICATED ON THE REFLECTED CEILING PLANS ARE TO THE FACE OF FINISH OR CENTERLINE OF FIXTURE AS APPLICABLE.

C REFER TO A000 SERIES DRAWINGS FOR PARTITION TYPES AND FINISH SCHEDULES.

D CENTER AND SYMMETRICALLY LOCATE LIGHT FIXTURES IN ROOM OR DEFINED AREA OF ROOM OR SOFFIT UNLESS INDICATED OTHERWISE.

E ALL DEVICES MOUNTED IN OR ON ACOUSTIC CEILING TILES ARE TO BE CENTERED.

F SPRINKLER HEADS ARE TO BE GENERALLY LOCATED IN CENTERS OF ACOUSTIC CEILING TILES AND SPACED SYMMETRICALLY WITH RESPECT TO LIGHT FIXTURES, GRILLES, DIFFUSER AND OTHER CEILING ELEMENTS TO THE GREATEST EXTENT PRACTICAL.

G REFER TO APPLICABLE MECHANICAL AND ELECTRICAL DRAWINGS FOR COMPLETE LAYOUT OF LIGHT FIXTURES, GRILLES AND DIFFUSERS IN SERVICE AND UTILITY SPACES (INCLUDING ATTICS).

H AT 5TH FLOOR ACOUSTICAL TILE CEILINGS, ALSO PROVIDE 5/8" TYPE "X" GYPSUM BOARD ON 7/8" RESILIENT FURRING CHANNELS ATTACHED TO ROOM TRUSSES ABOVE. CARRY GYPSUM BOARD AT PARTITIONS AT ROOM PERIMITER UP TO TOP OF WALL TO FULL CREATE ENCLOSURE.

I AT GYPSUM CEILING FRAMING ADJACENT TO FAN COIL UNITS - PROVIDE FRAMING AROUND UNIT AS REQUIRED - SEE MECHANICAL DRAWINGS

NEW WORK NOTES

1 5/8" SUSPENDED GYPSUM WALL BOARD SOFFIT – PAINTED – TYPICAL AT STUDENT ROOM ENTRANCES AND BATHS.

KEY PLAN

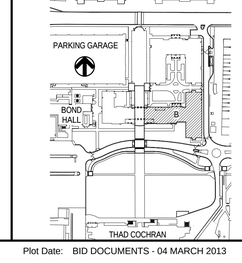

THE McCARTY COMPANY
DESIGN GROUP, P.A.
TELEPHONE: (662) 844-4400
FAX: (662) 844-0500
OFFICE ADDRESS: 533 WEST MAIN STREET TUPELO, MS 38804
MAILING ADDRESS: P.O. BOX 440 TUPELO, MS 38802

DESIGN ARCHITECT
Hanbury Evans Wright Vlattas + Company
120 Atlantic Street
Norfolk, VA 23510
757.321.9600
www.hewv.com

PROJECT TITLE
USM - CENTURY PARK SOUTH
IHL# 208-297
HATTIESBURG, MISSISSIPPI

THE UNIVERSITY OF SOUTHERN MISSISSIPPI

PROJECT NO: 2012020
DRAWN BY: Author
CHECKED BY: JTG
DATE ISSUED: 04 MAR 2013

REVISIONS & ADDENDUMS

SHEET TITLE
BUILDING B - FIRST FLOOR REFLECTED CEILING PLAN

SHEET NUMBER
A401B

Plot Date: BID DOCUMENTS - 04 MARCH 2013

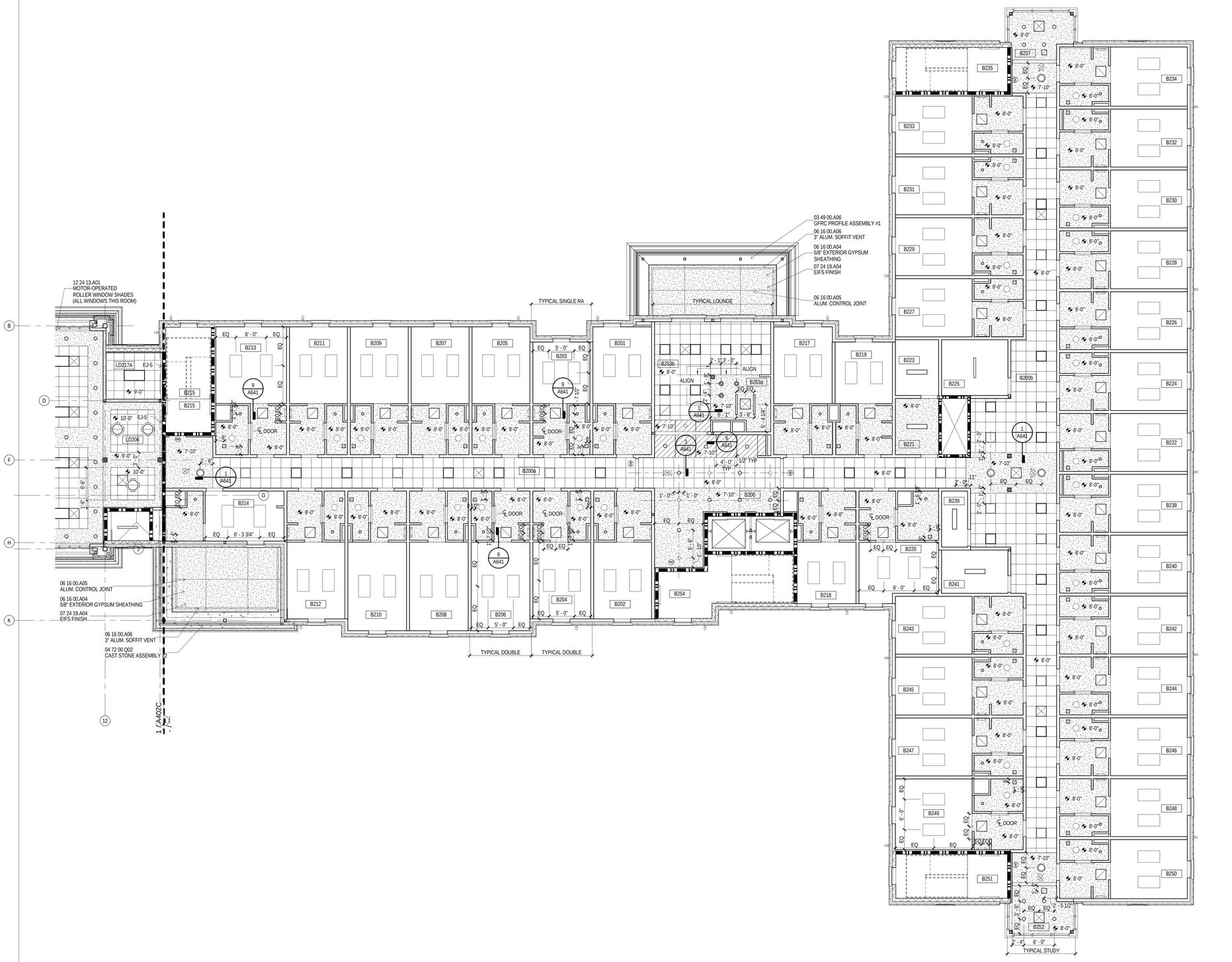

NORTH

1
1/8" = 1'-0"

BUILDING B - SECOND FLOOR REFLECTED CEILING PLAN

0' 8' 16' 24'

3/9/2013 7:22:56 AM

REFLECTED CEILING PLAN LEGEND

- 09 51 13.C01 2x2 LAY-IN CEILING
- 09 29 00 GYPSUM BOARD CEILING, PAINTED
- 06 41 16.A04 PLASTIC LAMINATE CLAD PLYWOOD PANEL. SEE DETAILS A461
- 07 24 19.A05 EIFS FINISH ON 5/8" EXT. GYPSUM SHEATHING
- 06 16 00.A05 ALUM. CONTROL JOINT
- HVAC DIFFUSER / PERFORATED GRILLE, SUPPLY AIR - SEE MECHANICAL
- HVAC DIFFUSER / PERFORATED GRILLE, RETURN AIR - SEE MECHANICAL
- HVAC EXHAUST GRILLE - SEE MECHANICAL DRAWINGS
- EXIT SIGNAGE
- LAY-IN FLUORESCENT LIGHT FIXTURE
- SUSPENDED LIGHT FIXTURE
- SUSPENDED LIGHT FIXTURE
- SUSPENDED LIGHT FIXTURE (BUILDING C ONLY)
- RECESSED/FLUSH-MOUNTED LIGHT FIXTURE
- WALL-MOUNTED LIGHT FIXTURE
- DOWN LIGHT FIXTURE
- SURFACE MOUNTED DECORATIVE LIGHT FIXTURE
- TRACK LIGHT FIXTURES
- EXTERIOR LIGHT FIXTURE
- CEILING FAN
- EJ 07.95.00 #### EXPANSION JOINT COVER (EJ-#)
- CJ CONTROL JOINT

GENERAL NOTES - REFLECTED CEILING PLAN

NEW WORK PLAN NOTES - REFLECTED CEILING PLANS

GENERAL REFLECTED CEILING PLAN NOTES

A REFLECTED CEILING PLAN NOTES BELOW ARE REFERENCED ON THE 1/8" SCALE REFLECTED CEILING PLANS (A400 SERIES) FOR RESIDENTIAL AREAS. REFER TO THE 1/8" SCALE FLOOR PLANS (A100 SERIES) DRAWINGS FOR ADDITIONAL PLAN NOTES.

B UNLESS NOTED OTHERWISE, DIMENSIONS INDICATED ON THE REFLECTED CEILING PLANS ARE TO THE FACE OF FINISH OR CENTERLINE OF FIXTURE AS APPLICABLE.

C REFER TO A000 SERIES DRAWINGS FOR PARTITION TYPES AND FINISH SCHEDULES.

D CENTER AND SYMMETRICALLY LOCATE LIGHT FIXTURES IN ROOM OR DEFINED AREA OF ROOM OR SOFFIT UNLESS INDICATED OTHERWISE.

E ALL DEVICES MOUNTED IN OR ON ACOUSTIC CEILING TILES ARE TO BE CENTERED.

F SPRINKLER HEADS ARE TO BE GENERALLY LOCATED IN CENTERS OF ACOUSTIC CEILING TILES AND SPACED SYMMETRICALLY WITH RESPECT TO LIGHT FIXTURES, GRILLES, DIFFUSER AND OTHER CEILING ELEMENTS TO THE GREATEST EXTENT PRACTICAL.

G REFER TO APPLICABLE MECHANICAL AND ELECTRICAL DRAWINGS FOR COMPLETE LAYOUT OF LIGHT FIXTURES, GRILLES AND DIFFUSERS IN SERVICE AND UTILITY SPACES (INCLUDING ATTICS).

H AT 5TH FLOOR ACOUSTICAL TILE CEILINGS, ALSO PROVIDE 5/8" TYPE "X" GYPSUM BOARD ON 7/8" RESILIENT FURRING CHANNELS ATTACHED TO ROOM TRUSSES ABOVE. CARRY GYPSUM BOARD AT PARTITIONS AT ROOM PERIMITER UP TO TOP OF WALL TO FULL CREATE ENCLOSURE.

I AT GYPSUM CEILING FRAMING ADJACENT TO FAN COIL UNITS - PROVIDE FRAMING AROUND UNIT AS REQUIRED - SEE MECHANICAL DRAWINGS

NEW WORK NOTES

1 5/8" SUSPENDED GYPSUM WALL BOARD SOFFIT – PAINTED – TYPICAL AT STUDENT ROOM ENTRANCES AND BATHS.

KEY PLAN

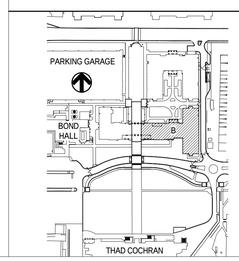

THE McCARTY COMPANY
DESIGN GROUP, P.A.
TELEPHONE: (662) 844-4400
FAX: (662) 844-0500
OFFICE ADDRESS: 533 WEST MAIN STREET TUPELO, MS 38804
MAILING ADDRESS: P.O. BOX 440 TUPELO, MS 38802

DESIGN ARCHITECT
Hanbury Evans Wright Vlattas + Company
120 Atlantic Street
Norfolk, VA 23510
757.321.9600
www.hewv.com

PROJECT TITLE
USM - CENTURY PARK SOUTH
IHL# 208-297
HATTIESBURG, MS

THE UNIVERSITY OF SOUTHERN MISSISSIPPI

PROJECT NO: 2012020
DRAWN BY: Author
CHECKED BY: JTG
DATE ISSUED: 04 MAR 2013

REVISIONS & ADDENDUMS

SHEET TITLE
BUILDING B - SECOND FLOOR REFLECTED CEILING PLAN

SHEET NUMBER
A402B

Plot Date: BID DOCUMENTS - 04 MARCH 2013

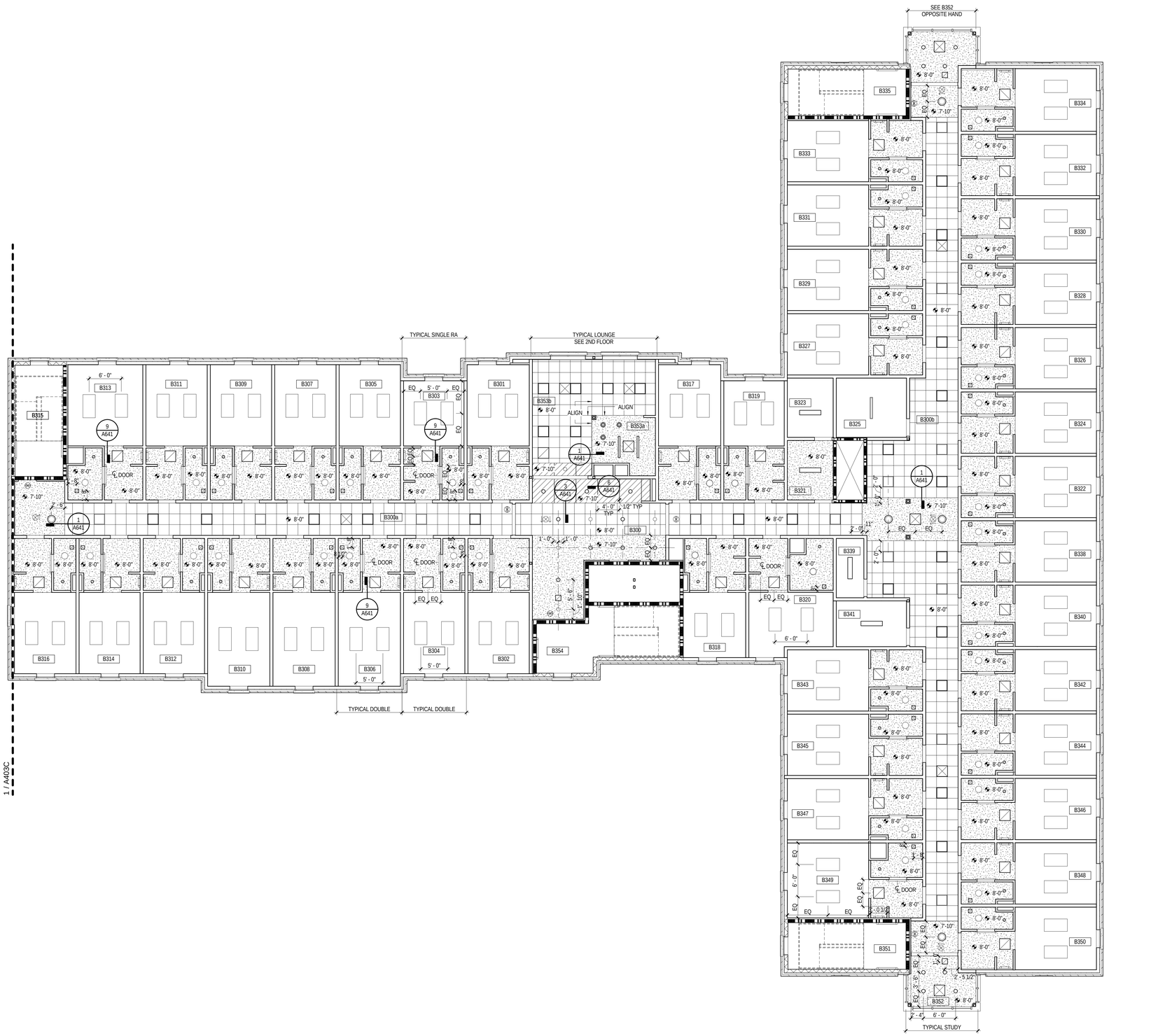

NORTH

1 1/8" = 1'-0"

BUILDING B - THIRD & FOURTH FLOOR REFLECTED CEILING PLAN

0' 8' 16' 24'

3/9/2013 7:24:27 AM

REFLECTED CEILING PLAN LEGEND

- 09 51 13.C01 2x2 LAY-IN CEILING
- 09 29 00 GYPSUM BOARD CEILING, PAINTED
- 06 41 16.A04 PLASTIC LAMINATE CLAD PLYWOOD PANEL. SEE DETAILS A461
- 07 24 19.A05 EIFS FINISH ON 5/8" EXT. GYPSUM SHEATHING
- 06 16 00.A05 ALUM. CONTROL JOINT
- HVAC DIFFUSER / PERFORATED GRILLE, SUPPLY AIR - SEE MECHANICAL
- HVAC DIFFUSER / PERFORATED GRILLE, RETURN AIR - SEE MECHANICAL
- HVAC EXHAUST GRILLE - SEE MECHANICAL DRAWINGS
- EXIT SIGNAGE
- LAY-IN FLUORESCENT LIGHT FIXTURE
- SUSPENDED LIGHT FIXTURE
- SUSPENDED LIGHT FIXTURE
- SUSPENDED LIGHT FIXTURE (BUILDING C ONLY)
- RECESSED/FLUSH-MOUNTED LIGHT FIXTURE
- WALL-MOUNTED LIGHT FIXTURE
- DOWN LIGHT FIXTURE
- SURFACE MOUNTED DECORATIVE LIGHT FIXTURE
- TRACK LIGHT FIXTURES
- EXTERIOR LIGHT FIXTURE
- CEILING FAN
- EJ — 07.95.00 #### EXPANSION JOINT COVER (EJ-#)
- CJ — CONTROL JOINT

GENERAL NOTES - REFLECTED CEILING PLAN

NEW WORK PLAN NOTES - REFLECTED CEILING PLANS

GENERAL REFLECTED CEILING PLAN NOTES

A REFLECTED CEILING PLAN NOTES BELOW ARE REFERENCED ON THE 1/8" SCALE REFLECTED CEILING PLANS (A400 SERIES) FOR RESIDENTIAL AREAS. REFER TO THE 1/8" SCALE FLOOR PLANS (A100 SERIES) DRAWINGS FOR ADDITIONAL PLAN NOTES.

B UNLESS NOTED OTHERWISE, DIMENSIONS INDICATED ON THE REFLECTED CEILING PLANS ARE TO THE FACE OF FINISH OR CENTERLINE OF FIXTURE AS APPLICABLE.

C REFER TO A000 SERIES DRAWINGS FOR PARTITION TYPES AND FINISH SCHEDULES.

D CENTER AND SYMMETRICALLY LOCATE LIGHT FIXTURES IN ROOM OR DEFINED AREA OF ROOM OR SOFFIT UNLESS INDICATED OTHERWISE.

E ALL DEVICES MOUNTED IN OR ON ACOUSTIC CEILING TILES ARE TO BE CENTERED.

F SPRINKLER HEADS ARE TO BE GENERALLY LOCATED IN CENTERS OF ACOUSTIC CEILING TILES AND SPACED SYMMETRICALLY WITH RESPECT TO LIGHT FIXTURES, GRILLES, DIFFUSER AND OTHER CEILING ELEMENTS TO THE GREATEST EXTENT PRACTICAL.

G REFER TO APPLICABLE MECHANICAL AND ELECTRICAL DRAWINGS FOR COMPLETE LAYOUT OF LIGHT FIXTURES, GRILLES AND DIFFUSERS IN SERVICE AND UTILITY SPACES (INCLUDING ATTICS).

H AT 5TH FLOOR ACOUSTICAL TILE CEILINGS, ALSO PROVIDE 5/8" TYPE "X" GYPSUM BOARD ON 7/8" RESILIENT FURRING CHANNELS ATTACHED TO ROOM TRUSSES ABOVE. CARRY GYPSUM BOARD AT PARTITIONS AT ROOM PERIMITER UP TO TOP OF WALL TO FULL CREATE ENCLOSURE.

I AT GYPSUM CEILING FRAMING ADJACENT TO FAN COIL UNITS - PROVIDE FRAMING AROUND UNIT AS REQUIRED - SEE MECHANICAL DRAWINGS

NEW WORK NOTES

1 5/8" SUSPENDED GYPSUM WALL BOARD SOFFIT – PAINTED – TYPICAL AT STUDENT ROOM ENTRANCES AND BATHS.

KEY PLAN

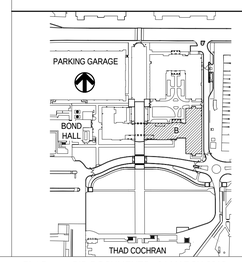

THE McCARTY COMPANY
DESIGN GROUP, P.A.
MAILING ADDRESS: P.O. BOX 440 TUPELO, MS 38802
OFFICE ADDRESS: 533 WEST MAIN STREET TUPELO, MS 38804
TELEPHONE: (662) 844-4400
FAX: (662) 844-0500

DESIGN ARCHITECT
Hanbury Evans Wright Vlattas + Company
120 Atlantic Street
Norfolk, VA 23510
757.321.9600
www.hewv.com

PROJECT TITLE
USM - CENTURY PARK SOUTH
IHL# 208-297
HATTIESBURG, MS

THE UNIVERSITY OF SOUTHERN MISSISSIPPI

PROJECT NO: 2012020
DRAWN BY: Author
CHECKED BY: JTG
DATE ISSUED: 04 MAR 2013

REVISIONS & ADDENDUMS

SHEET TITLE
BUILDING B - THIRD & FOURTH FLOOR REFLECTED CEILING PLAN

SHEET NUMBER
A403B

Plot Date: BID DOCUMENTS - 04 MARCH 2013

1 BUILDING B - FIFTH FLOOR REFLECTED CEILING PLAN
1/8" = 1'-0"

NORTH

0' 8' 16' 24'

3/9/2013 7:46:09 AM

REFLECTED CEILING PLAN LEGEND

- 09 51 13.C01 2x2 LAY-IN CEILING
- 09 29 00 GYPSUM BOARD CEILING, PAINTED
- 06 41 16.A04 PLASTIC LAMINATE CLAD PLYWOOD PANEL. SEE DETAILS A461
- 07 24 19.A05 EIFS FINISH ON 5/8" EXT. GYPSUM SHEATHING
- 06 16 00.A05 ALUM. CONTROL JOINT
- HVAC DIFFUSER / PERFORATED GRILLE, SUPPLY AIR - SEE MECHANICAL
- HVAC DIFFUSER / PERFORATED GRILLE, RETURN AIR - SEE MECHANICAL
- HVAC EXHAUST GRILLE - SEE MECHANICAL DRAWINGS
- EXIT SIGNAGE
- LAY-IN FLUORESCENT LIGHT FIXTURE
- SUSPENDED LIGHT FIXTURE
- SUSPENDED LIGHT FIXTURE
- SUSPENDED LIGHT FIXTURE (BUILDING C ONLY)
- RECESSED/FLUSH-MOUNTED LIGHT FIXTURE
- WALL-MOUNTED LIGHT FIXTURE
- DOWN LIGHT FIXTURE
- SURFACE MOUNTED DECORATIVE LIGHT FIXTURE
- TRACK LIGHT FIXTURES
- EXTERIOR LIGHT FIXTURE
- CEILING FAN
- EJ — 07.95.00 #### EXPANSION JOINT COVER (EJ-#)
- CJ — CONTROL JOINT

GENERAL NOTES - REFLECTED CEILING PLAN

NEW WORK PLAN NOTES - REFLECTED CEILING PLANS

GENERAL REFLECTED CEILING PLAN NOTES

A REFLECTED CEILING PLAN NOTES BELOW ARE REFERENCED ON THE 1/8" SCALE REFLECTED CEILING PLANS (A400 SERIES) FOR RESIDENTIAL AREAS. REFER TO THE 1/8" SCALE FLOOR PLANS (A100 SERIES) DRAWINGS FOR ADDITIONAL PLAN NOTES.

B UNLESS NOTED OTHERWISE, DIMENSIONS INDICATED ON THE REFLECTED CEILING PLANS ARE TO THE FACE OF FINISH OR CENTERLINE OF FIXTURE AS APPLICABLE.

C REFER TO A900 SERIES DRAWINGS FOR PARTITION TYPES AND FINISH SCHEDULES.

D CENTER AND SYMMETRICALLY LOCATE LIGHT FIXTURES IN ROOM OR DEFINED AREA OF ROOM OR SOFFIT UNLESS INDICATED OTHERWISE.

E ALL DEVICES MOUNTED IN OR ON ACOUSTIC CEILING TILES ARE TO BE CENTERED.

F SPRINKLER HEADS ARE TO BE GENERALLY LOCATED IN CENTERS OF ACOUSTIC CEILING TILES AND SPACED SYMMETRICALLY WITH RESPECT TO LIGHT FIXTURES, GRILLES, DIFFUSER AND OTHER CEILING ELEMENTS TO THE GREATEST EXTENT PRACTICAL.

G REFER TO APPLICABLE MECHANICAL AND ELECTRICAL DRAWINGS FOR COMPLETE LAYOUT OF LIGHT FIXTURES, GRILLES AND DIFFUSERS IN SERVICE AND UTILITY SPACES (INCLUDING ATTICS).

H AT 5TH FLOOR ACOUSTICAL TILE CEILINGS, ALSO PROVIDE 5/8" TYPE "X" GYPSUM BOARD ON 7/8" RESILIENT FURRING CHANNELS ATTACHED TO ROOM TRUSSES ABOVE. CARRY GYPSUM BOARD AT PARTITIONS AT ROOM PERIMITER UP TO TOP OF WALL TO FULL CREATE ENCLOSURE.

I AT GYPSUM CEILING FRAMING ADJACENT TO FAN COIL UNITS - PROVIDE FRAMING AROUND UNIT AS REQUIRED - SEE MECHANICAL DRAWINGS

NEW WORK NOTES

1 5/8" SUSPENDED GYPSUM WALL BOARD SOFFIT – PAINTED – TYPICAL AT STUDENT ROOM ENTRANCES AND BATHS.

KEY PLAN

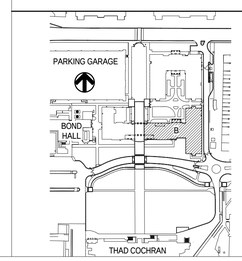

THE McCARTY COMPANY
DESIGN GROUP, P.A.
TELEPHONE: (662) 844-4400
FAX: (662) 844-0500
OFFICE ADDRESS: 333 WEST MAIN STREET TUPELO, MS 38804
MAILING ADDRESS: P.O. BOX 440 TUPELO, MS 38802

DESIGN ARCHITECT
Hanbury Evans Wright Vlattas + Company
120 Atlantic Street
Norfolk, VA 23510
757.321.9600
www.hewv.com

PROJECT TITLE
USM - CENTURY PARK SOUTH
IHL# 208-297
HATTIESBURG, MS

THE UNIVERSITY OF SOUTHERN MISSISSIPPI

PROJECT NO: 2012020
DRAWN BY: Author
CHECKED BY: JTG
DATE ISSUED: 04 MAR 2013

REVISIONS & ADDENDUMS

SHEET TITLE
BUILDING B - FIFTH FLOOR REFLECTED CEILING PLAN

SHEET NUMBER
A405B

Plot Date: BID DOCUMENTS - 04 MARCH 2013

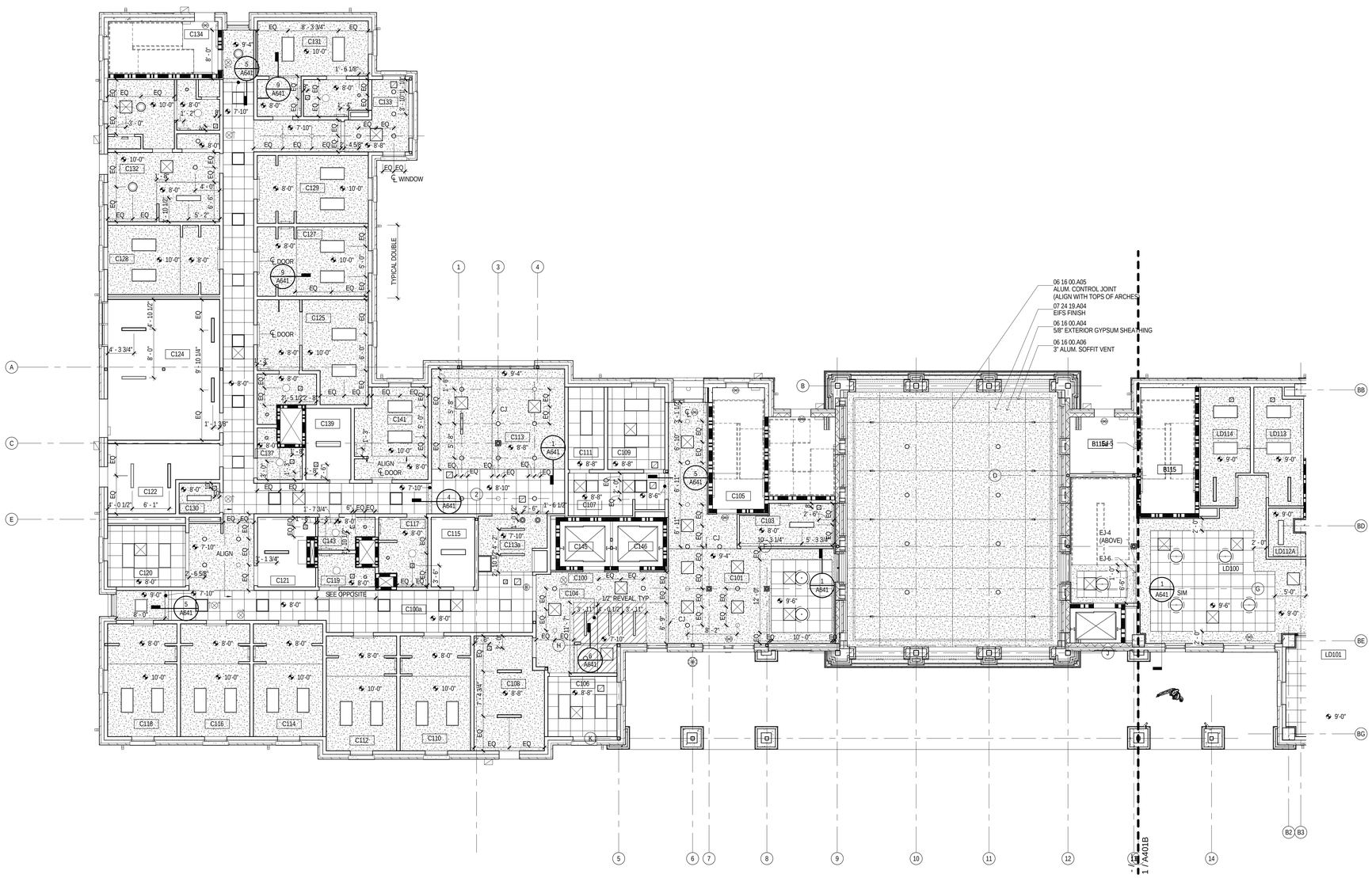

NORTH

1 BUILDING C - FIRST FLOOR REFLECTED CEILING PLAN

1/8" = 1'-0"

0' 8' 16' 24'

REFLECTED CEILING PLAN LEGEND

- 09 51 13.C01 — 2x2 LAY-IN CEILING
- 09 29 00 — GYPSUM BOARD CEILING, PAINTED
- 06 41 16.A04 — PLASTIC LAMINATE CLAD PLYWOOD PANEL. SEE DETAILS A461
- 07 24 19.A05 — EIFS FINISH ON 5/8" EXT. GYPSUM SHEATHING
- 06 16 00.A05 — ALUM. CONTROL JOINT
- HVAC DIFFUSER / PERFORATED GRILLE, SUPPLY AIR - SEE MECHANICAL
- HVAC DIFFUSER / PERFORATED GRILLE, RETURN AIR - SEE MECHANICAL
- HVAC EXHAUST GRILLE - SEE MECHANICAL DRAWINGS
- EXIT SIGNAGE
- LAY-IN FLUORESCENT LIGHT FIXTURE
- SUSPENDED LIGHT FIXTURE
- SUSPENDED LIGHT FIXTURE
- SUSPENDED LIGHT FIXTURE (BUILDING C ONLY)
- RECESSED/FLUSH-MOUNTED LIGHT FIXTURE
- WALL-MOUNTED LIGHT FIXTURE
- DOWN LIGHT FIXTURE
- SURFACE MOUNTED DECORATIVE LIGHT FIXTURE
- TRACK LIGHT FIXTURES
- EXTERIOR LIGHT FIXTURE
- CEILING FAN
- EJ — 07.95.00 #### EXPANSION JOINT COVER (EJ-#)
- CJ — CONTROL JOINT

GENERAL NOTES - REFLECTED CEILING PLAN

NEW WORK PLAN NOTES - REFLECTED CEILING PLANS

GENERAL REFLECTED CEILING PLAN NOTES

A REFLECTED CEILING PLAN NOTES BELOW ARE REFERENCED ON THE 1/8" SCALE REFLECTED CEILING PLANS (A400 SERIES) FOR RESIDENTIAL AREAS. REFER TO THE 1/8" SCALE FLOOR PLANS (A100 SERIES) DRAWINGS FOR ADDITIONAL PLAN NOTES.

B UNLESS NOTED OTHERWISE, DIMENSIONS INDICATED ON THE REFLECTED CEILING PLANS ARE TO THE FACE OF FINISH OR CENTERLINE OF FIXTURE AS APPLICABLE.

C REFER TO A000 SERIES DRAWINGS FOR PARTITION TYPES AND FINISH SCHEDULES.

D CENTER AND SYMMETRICALLY LOCATE LIGHT FIXTURES IN ROOM OR DEFINED AREA OF ROOM OR SOFFIT UNLESS INDICATED OTHERWISE.

E ALL DEVICES MOUNTED IN OR ON ACOUSTIC CEILING TILES ARE TO BE CENTERED.

F SPRINKLER HEADS ARE TO BE GENERALLY LOCATED IN CENTERS OF ACOUSTIC CEILING TILES AND SPACED SYMMETRICALLY WITH RESPECT TO LIGHT FIXTURES, GRILLES, DIFFUSER AND OTHER CEILING ELEMENTS TO THE GREATEST EXTENT PRACTICAL.

G REFER TO APPLICABLE MECHANICAL AND ELECTRICAL DRAWINGS FOR COMPLETE LAYOUT OF LIGHT FIXTURES, GRILLES AND DIFFUSERS IN SERVICE AND UTILITY SPACES (INCLUDING ATTICS).

H AT 5TH FLOOR ACOUSTICAL TILE CEILINGS, ALSO PROVIDE 5/8" TYPE "X" GYPSUM BOARD ON 7/8" RESILIENT FURRING CHANNELS ATTACHED TO ROOM TRUSSES ABOVE. CARRY GYPSUM BOARD AT PARTITIONS AT ROOM PERIMITER UP TO TOP OF WALL TO FULL CREATE ENCLOSURE.

I AT GYPSUM CEILING FRAMING ADJACENT TO FAN COIL UNITS - PROVIDE FRAMING AROUND UNIT AS REQUIRED - SEE MECHANICAL DRAWINGS

NEW WORK NOTES

1 5/8" SUSPENDED GYPSUM WALL BOARD SOFFIT – PAINTED – TYPICAL AT STUDENT ROOM ENTRANCES AND BATHS.

KEY PLAN

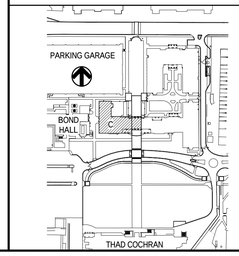

THE McCARTY COMPANY
DESIGN GROUP, P.A.
TELEPHONE: (662) 844-4400
FAX: (662) 844-0500
OFFICE ADDRESS: 533 WEST MAIN STREET TUPELO, MS 38804
MAILING ADDRESS: P.O. BOX 440 TUPELO, MS 38802

DESIGN ARCHITECT
Hanbury Evans Wright Vlattas + Company
120 Atlantic Street
Norfolk, VA 23510
757.321.9600
www.hewv.com

PROJECT TITLE
USM - CENTURY PARK SOUTH
IHL# 208-297
HATTIESBURG, MISSISSIPPI

THE UNIVERSITY OF SOUTHERN MISSISSIPPI

PROJECT NO: 2012020
DRAWN BY: Author
CHECKED BY: JTG
DATE ISSUED: 04 MAR 2013

REVISIONS & ADDENDUMS

SHEET TITLE
BUILDING C - FIRST FLOOR REFLECTED CEILING PLAN

SHEET NUMBER
A401C

Plot Date: BID DOCUMENTS - 04 MARCH 2013

3/9/2013 7:19:19 AM

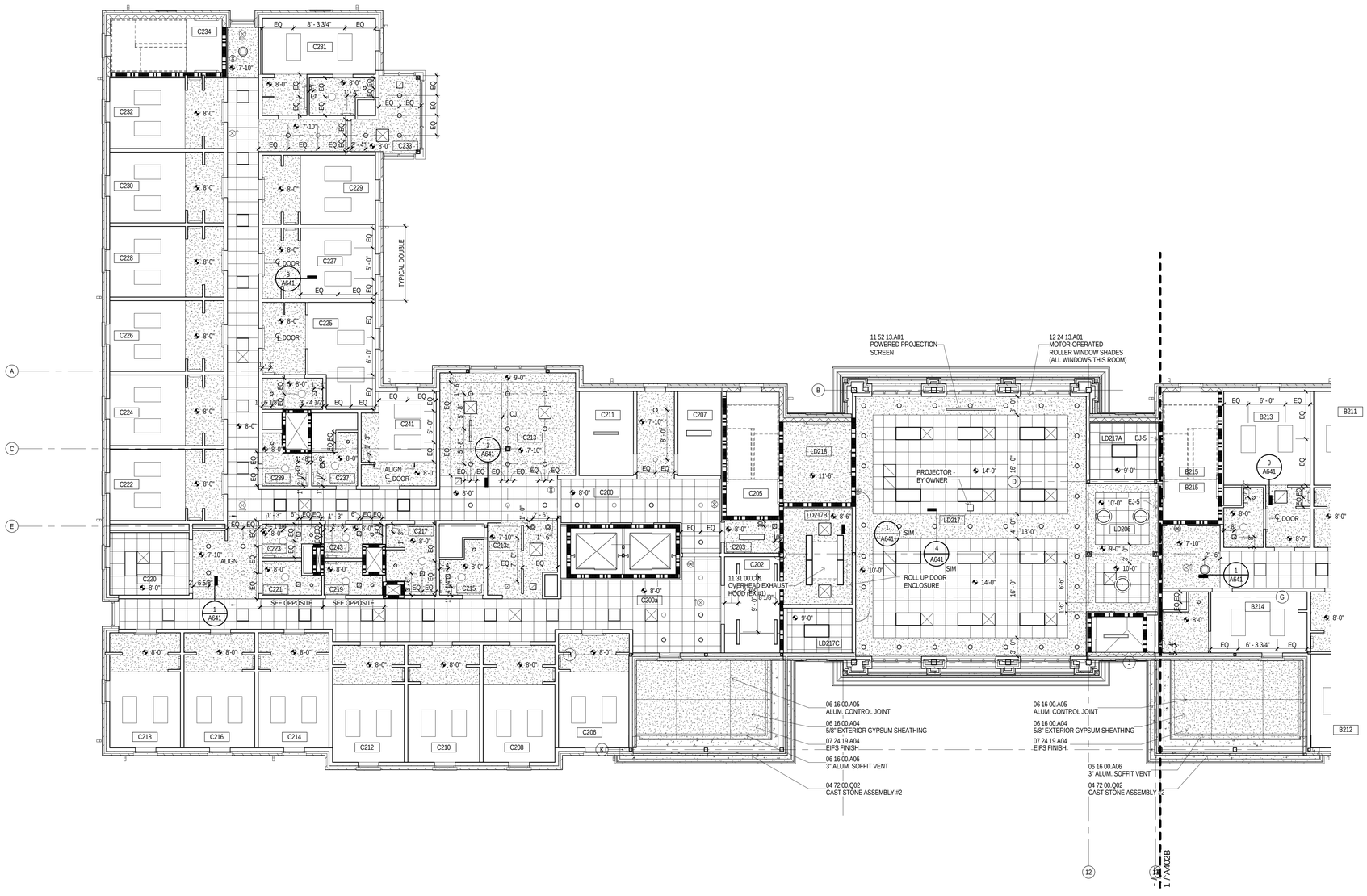

NORTH

1 BUILDING C - SECOND FLOOR REFLECTED CEILING PLAN

1/8" = 1'-0"

0' 8' 16' 24'

REFLECTED CEILING PLAN LEGEND

- 09 51 13.C01 2x2 LAY-IN CEILING
- 09 29 00 GYPSUM BOARD CEILING, PAINTED
- 06 41 16.A04 PLASTIC LAMINATE CLAD PLYWOOD PANEL. SEE DETAILS A461
- 07 24 19.A05 EIFS FINISH ON 5/8" EXT. GYPSUM SHEATHING
- 06 16 00.A05 ALUM. CONTROL JOINT
- HVAC DIFFUSER / PERFORATED GRILLE, SUPPLY AIR - SEE MECHANICAL
- HVAC DIFFUSER / PERFORATED GRILLE, RETURN AIR - SEE MECHANICAL
- HVAC EXHAUST GRILLE - SEE MECHANICAL DRAWINGS
- EXIT SIGNAGE
- LAY-IN FLUORESCENT LIGHT FIXTURE
- SUSPENDED LIGHT FIXTURE
- SUSPENDED LIGHT FIXTURE
- SUSPENDED LIGHT FIXTURE (BUILDING C ONLY)
- RECESSED/FLUSH-MOUNTED LIGHT FIXTURE
- WALL-MOUNTED LIGHT FIXTURE
- DOWN LIGHT FIXTURE
- SURFACE MOUNTED DECORATIVE LIGHT FIXTURE
- TRACK LIGHT FIXTURES
- EXTERIOR LIGHT FIXTURE
- CEILING FAN
- EJ 07.95.00 #### EXPANSION JOINT COVER (EJ-#)
- CJ CONTROL JOINT

GENERAL NOTES - REFLECTED CEILING PLAN

NEW WORK PLAN NOTES - REFLECTED CEILING PLANS

GENERAL REFLECTED CEILING PLAN NOTES

A REFLECTED CEILING PLAN NOTES BELOW ARE REFERENCED ON THE 1/8" SCALE REFLECTED CEILING PLANS (A400 SERIES) FOR RESIDENTIAL AREAS. REFER TO THE 1/8" SCALE FLOOR PLANS (A100 SERIES) DRAWINGS FOR ADDITIONAL PLAN NOTES.

B UNLESS NOTED OTHERWISE, DIMENSIONS INDICATED ON THE REFLECTED CEILING PLANS ARE TO THE FACE OF FINISH OR CENTERLINE OF FIXTURE AS APPLICABLE.

C REFER TO A000 SERIES DRAWINGS FOR PARTITION TYPES AND FINISH SCHEDULES.

D CENTER AND SYMMETRICALLY LOCATE LIGHT FIXTURES IN ROOM OR DEFINED AREA OF ROOM OR SOFFIT UNLESS INDICATED OTHERWISE.

E ALL DEVICES MOUNTED IN OR ON ACOUSTIC CEILING TILES ARE TO BE CENTERED.

F SPRINKLER HEADS ARE TO BE GENERALLY LOCATED IN CENTERS OF ACOUSTIC CEILING TILES AND SPACED SYMMETRICALLY WITH RESPECT TO LIGHT FIXTURES, GRILLES, DIFFUSER AND OTHER CEILING ELEMENTS TO THE GREATEST EXTENT PRACTICAL.

G REFER TO APPLICABLE MECHANICAL AND ELECTRICAL DRAWINGS FOR COMPLETE LAYOUT OF LIGHT FIXTURES, GRILLES AND DIFFUSERS IN SERVICE AND UTILITY SPACES (INCLUDING ATTICS).

H AT 5TH FLOOR ACOUSTICAL TILE CEILINGS, ALSO PROVIDE 5/8" TYPE "X" GYPSUM BOARD ON 7/8" RESILIENT FURRING CHANNELS ATTACHED TO ROOM TRUSSES ABOVE. CARRY GYPSUM BOARD AT PARTITIONS AT ROOM PERIMITER UP TO TOP OF WALL TO FULL CREATE ENCLOSURE.

I AT GYPSUM CEILING FRAMING ADJACENT TO FAN COIL UNITS - PROVIDE FRAMING AROUND UNIT AS REQUIRED - SEE MECHANICAL DRAWINGS

NEW WORK NOTES

1 5/8" SUSPENDED GYPSUM WALL BOARD SOFFIT – PAINTED – TYPICAL AT STUDENT ROOM ENTRANCES AND BATHS.

KEY PLAN

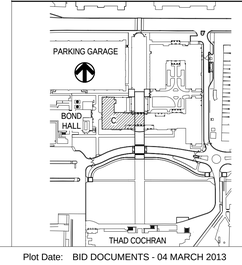

THE McCARTY COMPANY
DESIGN GROUP, P.A.
TELEPHONE: (662) 844-4400
FAX: (662) 844-0500
OFFICE ADDRESS: 533 WEST MAIN STREET TUPELO, MS 38804
MAILING ADDRESS: P.O. BOX 440 TUPELO, MS 38802

DESIGN ARCHITECT
Hanbury Evans Wright Vlattas + Company
120 Atlantic Street
Norfolk, VA 23510
757.321.9600
www.hewv.com

PROJECT TITLE
USM - CENTURY PARK SOUTH
IHL# 208-297
HATTIESBURG, MS

THE UNIVERSITY OF SOUTHERN MISSISSIPPI

PROJECT NO: 2012020
DRAWN BY: Author
CHECKED BY: JTG
DATE ISSUED: 04 MAR 2013

REVISIONS & ADDENDUMS

SHEET TITLE
BUILDING C - SECOND FLOOR REFLECTED CEILING PLAN

SHEET NUMBER
A402C

Plot Date: BID DOCUMENTS - 04 MARCH 2013

3/9/2013 7:23:31 AM

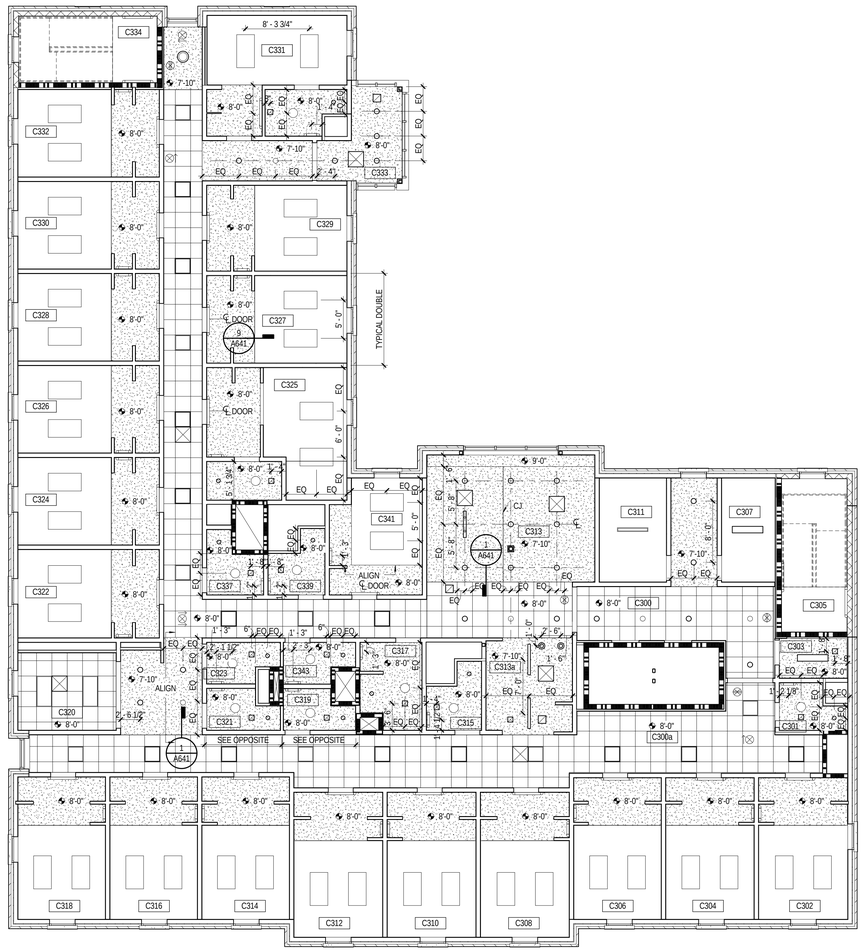

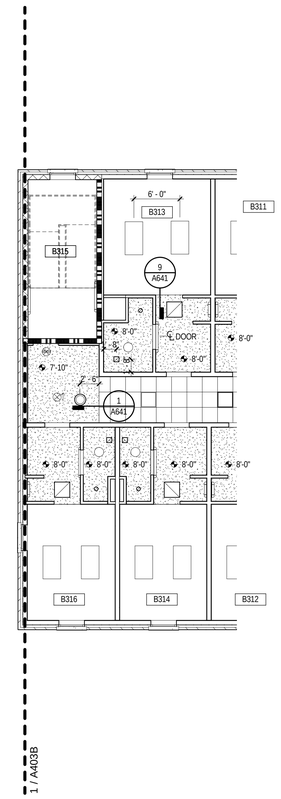

NORTH

1 BUILDING B - THIRD & FOURTH FLOOR REFLECTED CEILING PLAN

1/8" = 1'-0"

0' 8' 16' 24'

REFLECTED CEILING PLAN LEGEND

- 09 51 13.C01 2x2 LAY-IN CEILING
- 09 29 00 GYPSUM BOARD CEILING, PAINTED
- 06 41 16.A04 PLASTIC LAMINATE CLAD PLYWOOD PANEL. SEE DETAILS A461
- 07 24 19.A05 EIFS FINISH ON 5/8" EXT. GYPSUM SHEATHING
- 06 16 00.A05 ALUM. CONTROL JOINT
- HVAC DIFFUSER / PERFORATED GRILLE, SUPPLY AIR - SEE MECHANICAL
- HVAC DIFFUSER / PERFORATED GRILLE, RETURN AIR - SEE MECHANICAL
- HVAC EXHAUST GRILLE - SEE MECHANICAL DRAWINGS
- EXIT SIGNAGE
- LAY-IN FLUORESCENT LIGHT FIXTURE
- SUSPENDED LIGHT FIXTURE
- SUSPENDED LIGHT FIXTURE
- SUSPENDED LIGHT FIXTURE (BUILDING C ONLY)
- RECESSED/FLUSH-MOUNTED LIGHT FIXTURE
- WALL-MOUNTED LIGHT FIXTURE
- DOWN LIGHT FIXTURE
- SURFACE MOUNTED DECORATIVE LIGHT FIXTURE
- TRACK LIGHT FIXTURES
- EXTERIOR LIGHT FIXTURE
- CEILING FAN
- EJ 07.95.00 #### EXPANSION JOINT COVER (EJ-#)
- CJ CONTROL JOINT

GENERAL NOTES - REFLECTED CEILING PLAN

NEW WORK PLAN NOTES - REFLECTED CEILING PLANS

GENERAL REFLECTED CEILING PLAN NOTES

A REFLECTED CEILING PLAN NOTES BELOW ARE REFERENCED ON THE 1/8" SCALE REFLECTED CEILING PLANS (A400 SERIES) FOR RESIDENTIAL AREAS. REFER TO THE 1/8" SCALE FLOOR PLANS (A100 SERIES) DRAWINGS FOR ADDITIONAL PLAN NOTES.

B UNLESS NOTED OTHERWISE, DIMENSIONS INDICATED ON THE REFLECTED CEILING PLANS ARE TO THE FACE OF FINISH OR CENTERLINE OF FIXTURE AS APPLICABLE.

C REFER TO A000 SERIES DRAWINGS FOR PARTITION TYPES AND FINISH SCHEDULES.

D CENTER AND SYMMETRICALLY LOCATE LIGHT FIXTURES IN ROOM OR DEFINED AREA OF ROOM OR SOFFIT UNLESS INDICATED OTHERWISE.

E ALL DEVICES MOUNTED IN OR ON ACOUSTIC CEILING TILES ARE TO BE CENTERED.

F SPRINKLER HEADS ARE TO BE GENERALLY LOCATED IN CENTERS OF ACOUSTIC CEILING TILES AND SPACED SYMMETRICALLY WITH RESPECT TO LIGHT FIXTURES, GRILLES, DIFFUSER AND OTHER CEILING ELEMENTS TO THE GREATEST EXTENT PRACTICAL.

G REFER TO APPLICABLE MECHANICAL AND ELECTRICAL DRAWINGS FOR COMPLETE LAYOUT OF LIGHT FIXTURES, GRILLES AND DIFFUSERS IN SERVICE AND UTILITY SPACES (INCLUDING ATTICS).

H AT 5TH FLOOR ACOUSTICAL TILE CEILINGS, ALSO PROVIDE 5/8" TYPE "X" GYPSUM BOARD ON 7/8" RESILIENT FURRING CHANNELS ATTACHED TO ROOM TRUSSES ABOVE. CARRY GYPSUM BOARD AT PARTITIONS AT ROOM PERIMITER UP TO TOP OF WALL TO FULL CREATE ENCLOSURE.

I AT GYPSUM CEILING FRAMING ADJACENT TO FAN COIL UNITS - PROVIDE FRAMING AROUND UNIT AS REQUIRED - SEE MECHANICAL DRAWINGS

NEW WORK NOTES

1 5/8" SUSPENDED GYPSUM WALL BOARD SOFFIT – PAINTED – TYPICAL AT STUDENT ROOM ENTRANCES AND BATHS.

KEY PLAN

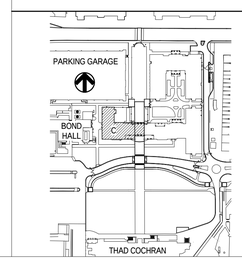

THE McCARTY COMPANY
DESIGN GROUP, P.A.
TELEPHONE: (662) 844-4400
FAX: (662) 844-0500
OFFICE ADDRESS: 533 WEST MAIN STREET TUPELO, MS 38804
MAILING ADDRESS: P.O. BOX 440 TUPELO, MS 38802

DESIGN ARCHITECT
Hanbury Evans Wright Vlattas + Company
120 Atlantic Street
Norfolk, VA 23510
757.321.9600
www.hewv.com

PROJECT TITLE
USM - CENTURY PARK SOUTH
IHL# 208-297
HATTIESBURG, MS

THE UNIVERSITY OF SOUTHERN MISSISSIPPI

PROJECT NO: 2012020
DRAWN BY: Author
CHECKED BY: JTG
DATE ISSUED: 04 MAR 2013

REVISIONS & ADDENDUMS

SHEET TITLE
BUILDING C - THIRD & FOURTH FLOOR REFLECTED CEILING PLAN

SHEET NUMBER
A403C

Plot Date: BID DOCUMENTS - 04 MARCH 2013

3/9/2013 7:25:18 AM

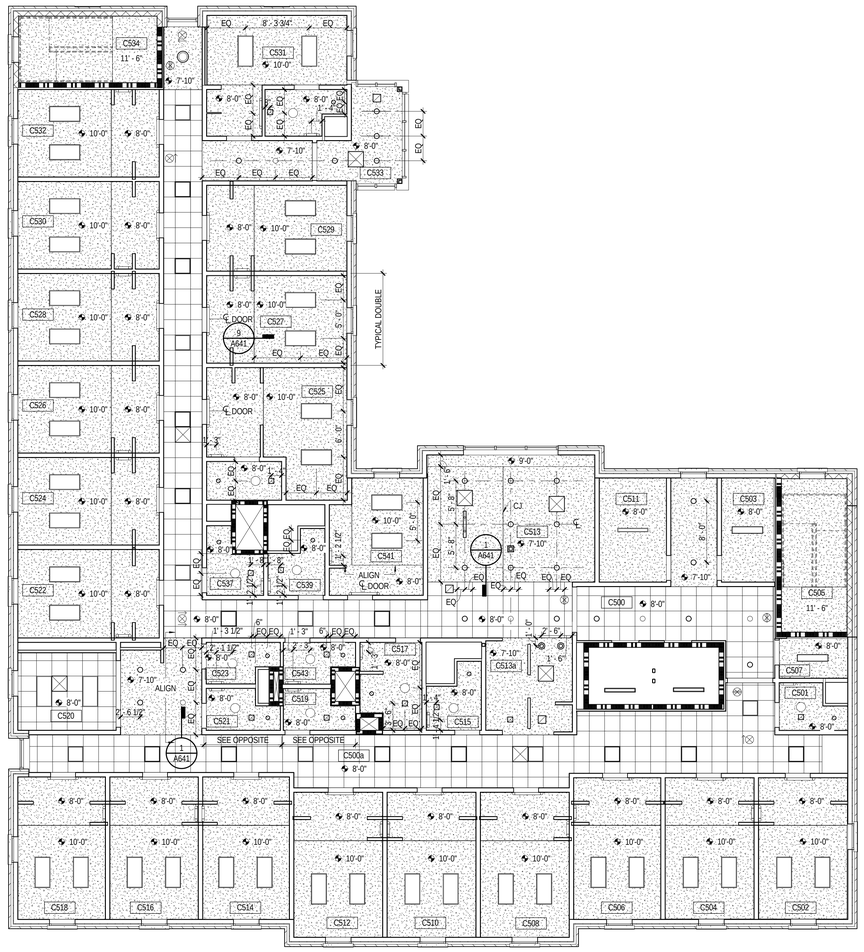

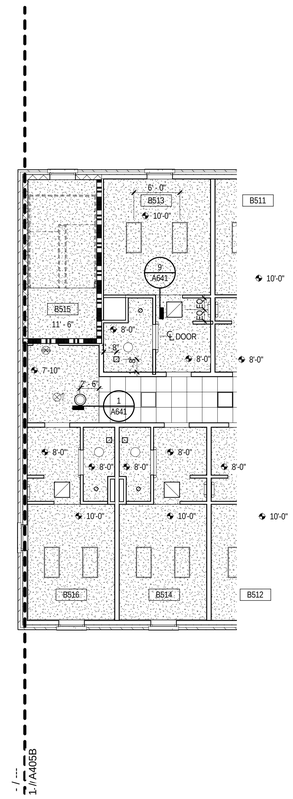

1 BUILDING C - FIFTH FLOOR REFLECTED CEILING PLAN

1/8" = 1'-0"

NORTH

0' 8' 16' 24'

REFLECTED CEILING PLAN LEGEND

- 09 51 13.C01 2x2 LAY-IN CEILING
- 09 29 00 GYPSUM BOARD CEILING, PAINTED
- 06 41 16.A04 PLASTIC LAMINATE CLAD PLYWOOD PANEL. SEE DETAILS A461
- 07 24 19.A05 EIFS FINISH ON 5/8" EXT. GYPSUM SHEATHING
- 06 16 00.A05 ALUM. CONTROL JOINT
- HVAC DIFFUSER / PERFORATED GRILLE, SUPPLY AIR - SEE MECHANICAL
- HVAC DIFFUSER / PERFORATED GRILLE, RETURN AIR - SEE MECHANICAL
- HVAC EXHAUST GRILLE - SEE MECHANICAL DRAWINGS
- EXIT SIGNAGE
- LAY-IN FLUORESCENT LIGHT FIXTURE
- SUSPENDED LIGHT FIXTURE
- SUSPENDED LIGHT FIXTURE
- SUSPENDED LIGHT FIXTURE (BUILDING C ONLY)
- RECESSED/FLUSH-MOUNTED LIGHT FIXTURE
- WALL-MOUNTED LIGHT FIXTURE
- DOWN LIGHT FIXTURE
- SURFACE MOUNTED DECORATIVE LIGHT FIXTURE
- TRACK LIGHT FIXTURES
- EXTERIOR LIGHT FIXTURE
- CEILING FAN
- EJ — 07.95.00 #### EXPANSION JOINT COVER (EJ-#)
- CJ — CONTROL JOINT

GENERAL NOTES - REFLECTED CEILING PLAN

NEW WORK PLAN NOTES - REFLECTED CEILING PLANS

GENERAL REFLECTED CEILING PLAN NOTES

A REFLECTED CEILING PLAN NOTES BELOW ARE REFERENCED ON THE 1/8" SCALE REFLECTED CEILING PLANS (A400 SERIES) FOR RESIDENTIAL AREAS. REFER TO THE 1/8" SCALE FLOOR PLANS (A100 SERIES) DRAWINGS FOR ADDITIONAL PLAN NOTES.

B UNLESS NOTED OTHERWISE, DIMENSIONS INDICATED ON THE REFLECTED CEILING PLANS ARE TO THE FACE OF FINISH OR CENTERLINE OF FIXTURE AS APPLICABLE.

C REFER TO A000 SERIES DRAWINGS FOR PARTITION TYPES AND FINISH SCHEDULES.

D CENTER AND SYMMETRICALLY LOCATE LIGHT FIXTURES IN ROOM OR DEFINED AREA OF ROOM OR SOFFIT UNLESS INDICATED OTHERWISE.

E ALL DEVICES MOUNTED IN OR ON ACOUSTIC CEILING TILES ARE TO BE CENTERED.

F SPRINKLER HEADS ARE TO BE GENERALLY LOCATED IN CENTERS OF ACOUSTIC CEILING TILES AND SPACED SYMMETRICALLY WITH RESPECT TO LIGHT FIXTURES, GRILLES, DIFFUSER AND OTHER CEILING ELEMENTS TO THE GREATEST EXTENT PRACTICAL.

G REFER TO APPLICABLE MECHANICAL AND ELECTRICAL DRAWINGS FOR COMPLETE LAYOUT OF LIGHT FIXTURES, GRILLES AND DIFFUSERS IN SERVICE AND UTILITY SPACES (INCLUDING ATTICS).

H AT 5TH FLOOR ACOUSTICAL TILE CEILINGS, ALSO PROVIDE 5/8" TYPE "X" GYPSUM BOARD ON 7/8" RESILIENT FURRING CHANNELS ATTACHED TO ROOM TRUSSES ABOVE. CARRY GYPSUM BOARD AT PARTITIONS AT ROOM PERIMITER UP TO TOP OF WALL TO FULL CREATE ENCLOSURE.

I AT GYPSUM CEILING FRAMING ADJACENT TO FAN COIL UNITS - PROVIDE FRAMING AROUND UNIT AS REQUIRED - SEE MECHANICAL DRAWINGS

NEW WORK NOTES

1 5/8" SUSPENDED GYPSUM WALL BOARD SOFFIT – PAINTED – TYPICAL AT STUDENT ROOM ENTRANCES AND BATHS.

KEY PLAN

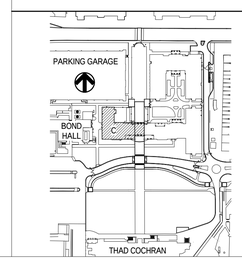

THE McCARTY COMPANY
DESIGN GROUP, P.A.
TELEPHONE: (662) 844-4400
FAX: (662) 844-0500
OFFICE ADDRESS: 533 WEST MAIN STREET TUPELO, MS 38804
MAILING ADDRESS: P.O. BOX 440 TUPELO, MS 38802

DESIGN ARCHITECT
Hanbury Evans Wright Vlattas + Company
120 Atlantic Street
Norfolk, VA 23510
757.321.9600
www.hewv.com

PROJECT TITLE
USM - CENTURY PARK SOUTH
IHL# 208-297
HATTIESBURG, MS

THE UNIVERSITY OF SOUTHERN MISSISSIPPI

PROJECT NO: 2012020
DRAWN BY: Author
CHECKED BY: JTG
DATE ISSUED: 04 MAR 2013

REVISIONS & ADDENDUMS

SHEET TITLE
BUILDING C - FIFTH FLOOR REFLECTED CEILING PLAN

SHEET NUMBER
A405C

Plot Date: BID DOCUMENTS - 04 MARCH 2013

3/9/2013 7:48:53 AM

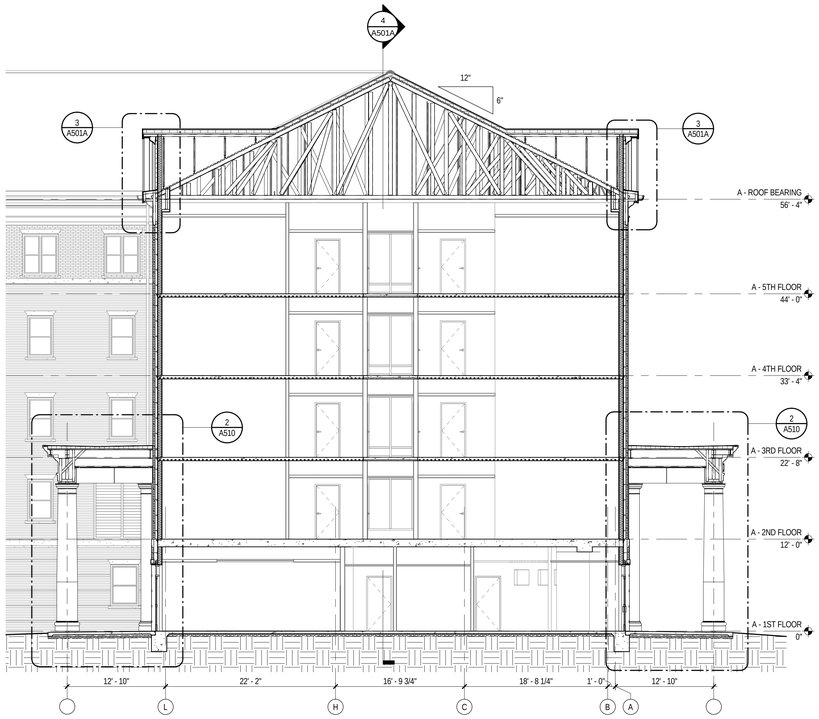

1 BUILDING A - NORTH-SOUTH SECTION
1/8" = 1'-0" A101A

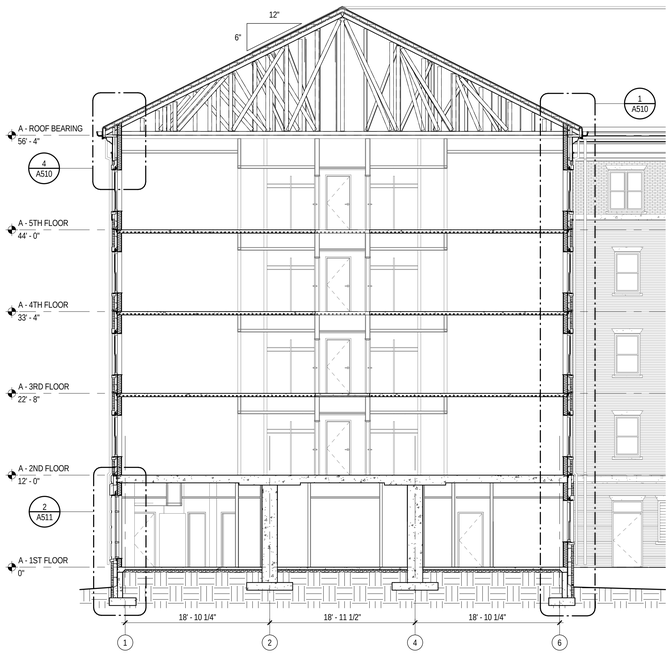

2 BUILDING A - EAST-WEST SECTION
1/8" = 1'-0" A101A

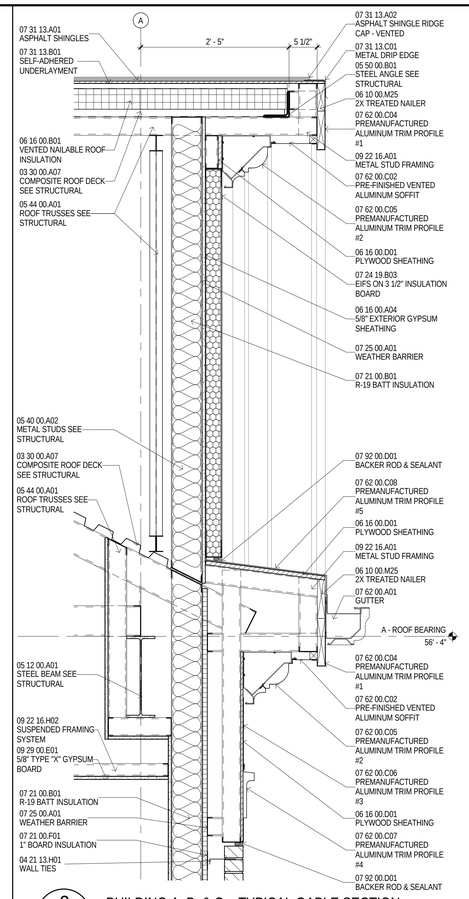

3 BUILDING A, B, & C, - TYPICAL GABLE SECTION
1" = 1'-0" A501A

MATERIAL KEYING

03 30 00.A07	COMPOSITE ROOF DECK SEE STRUCTURAL
04 21 13.H01	WALL TIES
05 12 00.A01	STEEL BEAM SEE STRUCTURAL
05 40 00.A02	METAL STUDS SEE STRUCTURAL
05 44 00.A01	ROOF TRUSSES SEE STRUCTURAL
05 50 00.B01	STEEL ANGLE SEE STRUCTURAL
06 10 00.M25	2X TREATED NAILER
06 16 00.A04	5/8" EXTERIOR GYPSUM SHEATHING
06 16 00.B01	VENTED NAILABLE ROOF INSULATION
06 16 00.D01	PLYWOOD SHEATHING
07 21 00.B01	R-19 BATT INSULATION
07 21 00.F01	1" BOARD INSULATION
07 24 19.B03	EIFS ON 3 1/2" INSULATION BOARD
07 25 00.A01	WEATHER BARRIER
07 31 13.A01	ASPHALT SHINGLES
07 31 13.A02	ASPHALT SHINGLE RIDGE CAP - VENTED
07 31 13.B01	SELF-ADHERED UNDERLAYMENT
07 31 13.C01	METAL DRIP EDGE
07 62 00.A01	GUTTER
07 62 00.C02	PRE-FINISHED VENTED ALUMINUM SOFFIT
07 62 00.C04	PREMANUFACTURED ALUMINUM TRIM PROFILE #1
07 62 00.C05	PREMANUFACTURED ALUMINUM TRIM PROFILE #2
07 62 00.C06	PREMANUFACTURED ALUMINUM TRIM PROFILE #3
07 62 00.C07	PREMANUFACTURED ALUMINUM TRIM PROFILE #4
07 62 00.C08	PREMANUFACTURED ALUMINUM TRIM PROFILE #5
07 92 00.D01	BACKER ROD & SEALANT
09 22 16.A01	METAL STUD FRAMING
09 22 16.H02	SUSPENDED FRAMING SYSTEM
09 29 00.E01	5/8" TYPE "X" GYPSUM BOARD

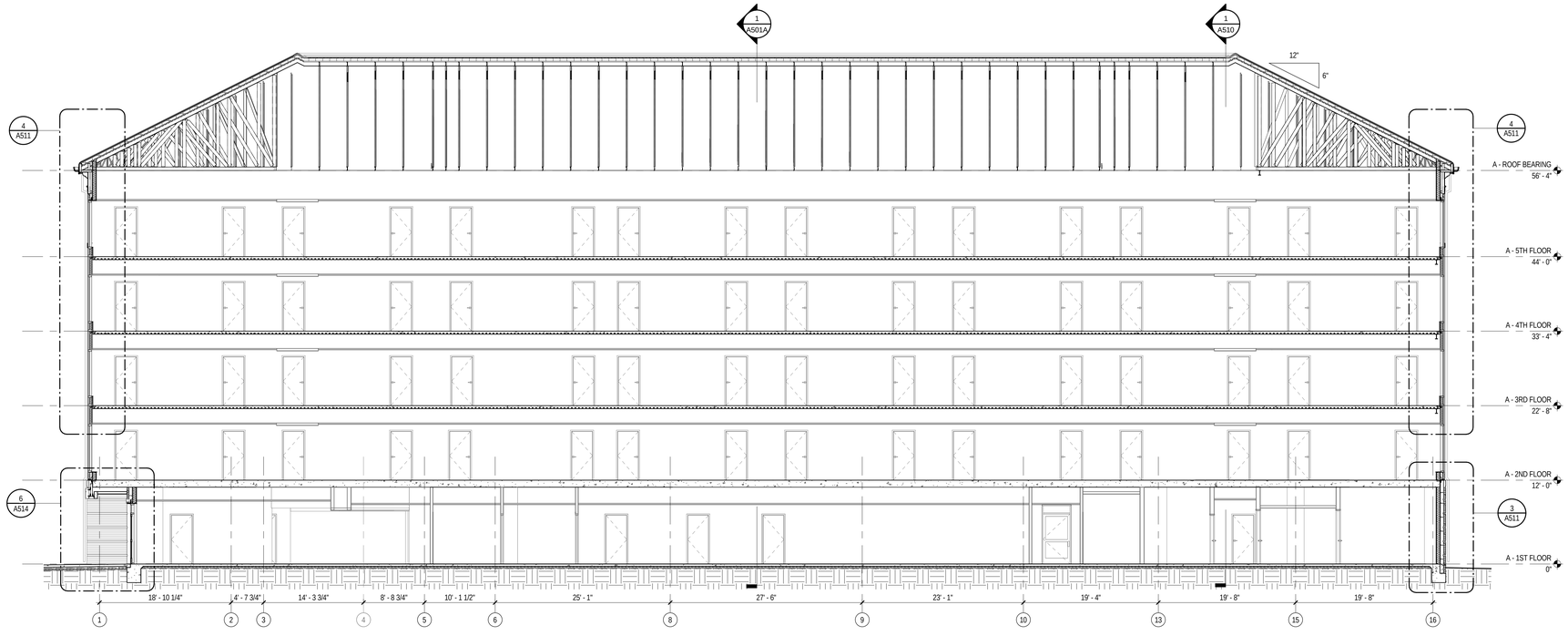

4 BUILDING A - EAST-WEST SECTION
1/8" = 1'-0" A101A

GENERAL NOTES

A PERIMETER ENVELOPE SHALL INCLUDE A "AIR BARRIER" BY SEALING THE EXTERIOR WALL ASSEMBLY TIGHT TO STRUCTURAL DECK AROUND THE ENTIRE BUILDING PERIMETER. REFER TO SPECIFICATIONS FOR MATERIALS AND ACCESSORIES NEEDED TO ACHIEVE A CONTINUOUSLY SEALED BARRIER.

B SEE SHEET A517 FOR COMPLETE DETAILS OF FACTORY-FORMED METAL TRIM, GFRC AND CAST STONE PROFILES.

C CONFIRM ALL WINDOW AND DOOR OPENING SIZES WITH MANUFACTURER.

D CONFIRM BLOCKING AND ATTACHMENT OF FACTORY-FORMED METAL TRIM, GFRC AND CAST STONE PROFILES WITH RESPECTIVE MANUFACTURERS.

E ALL EXPOSED STEEL ANGLE LINTELS TO BE FIELD PAINTED.

F UNDERSIDE OF ALL METAL FLOOR DECK AND ADJACENT STEEL STRUCTURE IN EXTERIOR SPACES WITH INTERIOR SPACE ABOVE SHALL HAVE SPRAY FOAM INSULATION APPLIED PER SPECIFICATIONS.

G EXTEND FLASHING THROUGH VENEER, ACROSS AIR SPACE BEHIND VENEER, UP AND BEHIND FACE OF CONTINUOUS INSULATION AT LEAST 8 INCHES, WITH UPPER EDGE TUCKED UNDER BUILDING WRAP, LAPPING AT LEAST 4 INCHES.

KEY PLAN

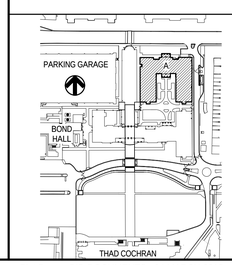

REGISTERED ARCHITECT
Thomas Jay Saunders
3487
Tupelo, MS
STATE OF MISSISSIPPI
04 march 2013

THE McCARTY COMPANY
DESIGN GROUP, P.A.
TELEPHONE: (662) 844-4400
FAX: (662) 844-0520
OFFICE ADDRESS: 533 WEST MAIN STREET TUPELO, MS 38804
MAILING ADDRESS: P.O. BOX 440 TUPELO, MS 38802

DESIGN ARCHITECT
Hanbury Evans Wright Vlattas + Company
120 Atlantic Street
Norfolk, VA 23510
757.321.9600
www.hewv.com

PROJECT TITLE
USM - CENTURY PARK SOUTH
IHL# 208-297
HATTIESBURG, MISSISSIPPI

THE UNIVERSITY OF SOUTHERN MISSISSIPPI

PROJECT NO: 2012020
DRAWN BY: MPS,CJR
CHECKED BY: JPH
DATE ISSUED: 04 MAR 2013

REVISIONS & ADDENDUMS

SHEET TITLE
BUILDING A - BUILDING SECTIONS

SHEET NUMBER
A501A
140 of 458

3/11/2013 4:52:29 AM

Plot Date: BID DOCUMENTS - 04 MARCH 2013

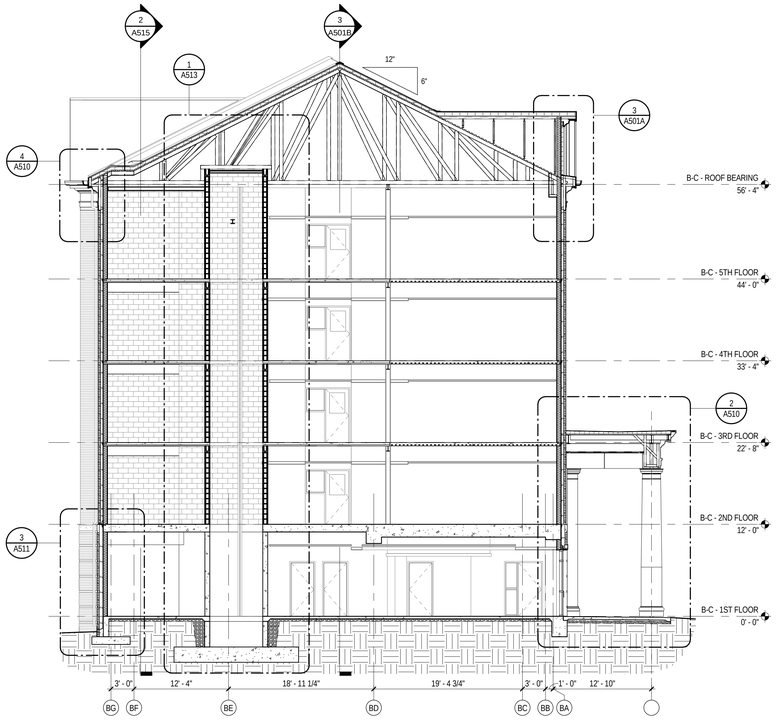

1 BUILDING B - NORTH-SOUTH SECTION
1/8" = 1'-0"
A101B

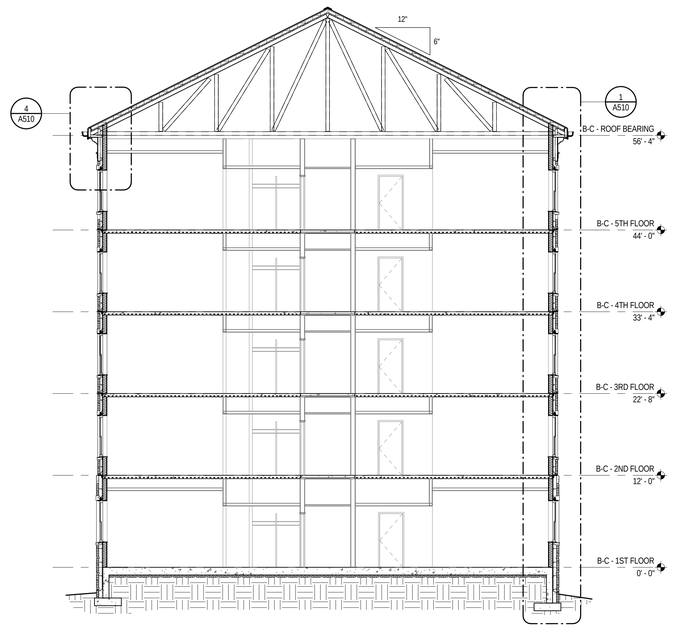

2 BUILDING B - EAST-WEST SECTION
1/8" = 1'-0"
A101B

3 BUILDING B - EAST-WEST SECTION
1/8" = 1'-0"
A101B

GENERAL NOTES

A PERIMETER ENVELOPE SHALL INCLUDE A "AIR BARRIER" BY SEALING THE EXTERIOR WALL ASSEMBLY TIGHT TO STRUCTURAL DECK AROUND THE ENTIRE BUILDING PERIMETER. REFER TO SPECIFICATIONS FOR MATERIALS AND ACCESSORIES NEEDED TO ACHIEVE A CONTINUOUSLY SEALED BARRIER.

B SEE SHEET A517 FOR COMPLETE DETAILS OF FACTORY-FORMED METAL TRIM, GFRC AND CAST STONE PROFILES.

C CONFIRM ALL WINDOW AND DOOR OPENING SIZES WITH MANUFACTURER.

D CONFIRM BLOCKING AND ATTACHMENT OF FACTORY-FORMED METAL TRIM, GFRC AND CAST STONE PROFILES WITH RESPECTIVE MANUFACTURERS.

E ALL EXPOSED STEEL ANGLE LINTELS TO BE FIELD PAINTED.

F UNDERSIDE OF ALL METAL FLOOR DECK AND ADJACENT STEEL STRUCTURE IN EXTERIOR SPACES WITH INTERIOR SPACE ABOVE SHALL HAVE SPRAY FOAM INSULATION APPLIED PER SPECIFICATIONS.

G EXTEND FLASHING THROUGH VENEER, ACROSS AIR SPACE BEHIND VENEER, UP AND BEHIND FACE OF CONTINUOUS INSULATION AT LEAST 8 INCHES; WITH UPPER EDGE TUCKED UNDER BUILDING WRAP, LAPPING AT LEAST 4 INCHES.

KEY PLAN

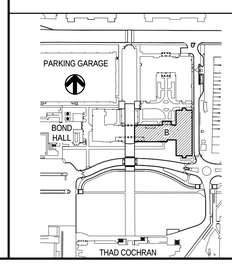

REGISTERED ARCHITECT
Thomas McCarty Saunders
3487
Tupelo, MS
STATE OF MISSISSIPPI
04 MARCH 2013

THE McCARTY COMPANY
DESIGN GROUP, P.A.
OFFICE ADDRESS:
533 WEST MAIN STREET
TUPELO, MS 38804
MAILING ADDRESS:
P.O. BOX 440
TUPELO, MS 38802
TELEPHONE:
(662) 844-4400
FAX:
(662) 844-0520

DESIGN ARCHITECT
Hanbury Evans Wright Vlattas + Company
120 Atlantic Street
Norfolk, VA 23510
757.321.9600
www.hewv.com

PROJECT TITLE
USM - CENTURY PARK SOUTH
IHL# 208-297
HATTIESBURG, MISSISSIPPI

THE UNIVERSITY OF SOUTHERN MISSISSIPPI

PROJECT NO:
- 2012020

DRAWN BY:
- MPS,CJR

CHECKED BY:
- JPH

DATE ISSUED:
- 04 MAR 2013

REVISIONS & ADDENDUMS

SHEET TITLE
BUILDING B - BUILDING SECTIONS

SHEET NUMBER
A501B

3/11/2013 5:33:19 AM

Plot Date: BID DOCUMENTS - 04 MAR 2013

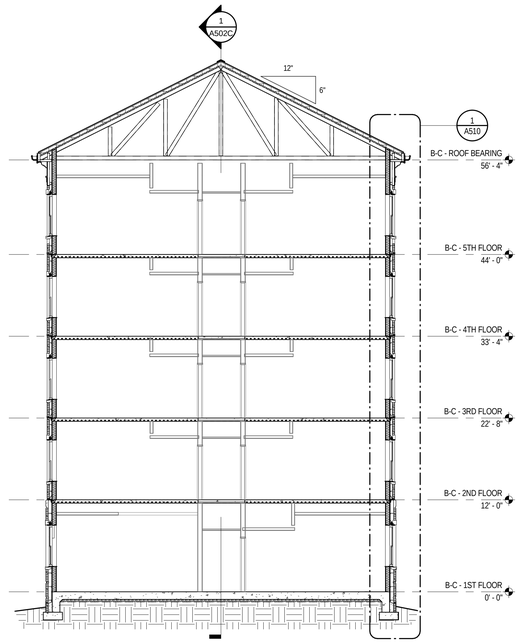

1 — 1/8" = 1'-0"

BUILDING C - EAST-WEST SECTION

A101C

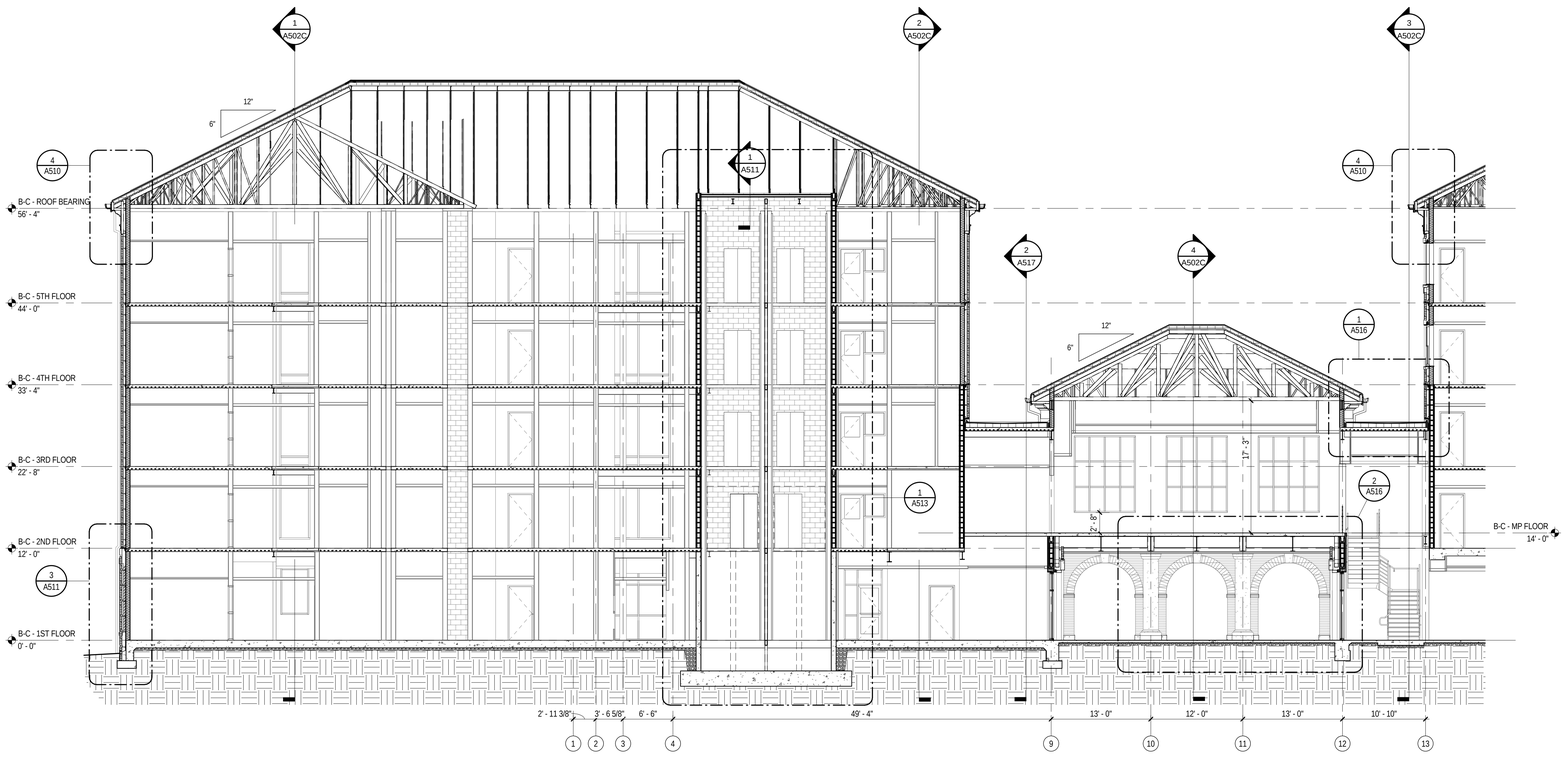

2 — 1/8" = 1'-0"

BUILDING C - EAST-WEST SECTION

A101C

3/11/2013 5:35:10 AM

GENERAL NOTES

A PERIMETER ENVELOPE SHALL INCLUDE A "AIR BARRIER" BY SEALING THE EXTERIOR WALL ASSEMBLY TIGHT TO STRUCTURAL DECK AROUND THE ENTIRE BUILDING PERIMETER. REFER TO SPECIFICATIONS FOR MATERIALS AND ACCESSORIES NEEDED TO ACHIEVE A CONTINUOUSLY SEALED BARRIER.

B SEE SHEET A517 FOR COMPLETE DETAILS OF FACTORY-FORMED METAL TRIM, GFRC AND CAST STONE PROFILES.

C CONFIRM ALL WINDOW AND DOOR OPENING SIZES WITH MANUFACTURER.

D CONFIRM BLOCKING AND ATTACHMENT OF FACTORY-FORMED METAL TRIM, GFRC AND CAST STONE PROFILES WITH RESPECTIVE MANUFACTURERS.

E ALL EXPOSED STEEL ANGLE LINTELS TO BE FIELD PAINTED.

F UNDERSIDE OF ALL METAL FLOOR DECK AND ADJACENT STEEL STRUCTURE IN EXTERIOR SPACES WITH INTERIOR SPACE ABOVE SHALL HAVE SPRAY FOAM INSULATION APPLIED PER SPECIFICATIONS.

G EXTEND FLASHING THROUGH VENEER, ACROSS AIR SPACE BEHIND VENEER, UP AND BEHIND FACE OF CONTINUOUS INSULATION AT LEAST 8 INCHES; WITH UPPER EDGE TUCKED UNDER BUILDING WRAP, LAPPING AT LEAST 4 INCHES.

KEY PLAN

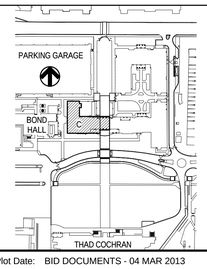

REGISTERED ARCHITECT
Thomas McCarty Saunders
3483
Tupelo, MS
STATE OF MISSISSIPPI
04 MARCH 2013

THE McCARTY COMPANY
DESIGN GROUP, P.A.
OFFICE ADDRESS:
533 WEST MAIN STREET
TUPELO, MS 38804
MAILING ADDRESS:
P.O. BOX 440
TUPELO, MS 38802
TELEPHONE:
(662) 844-4400
FAX:
(662) 844-0520

DESIGN ARCHITECT
Hanbury Evans Wright Vlattas + Company
120 Atlantic Street
Norfolk, VA 23510
757.321.9600
www.hewv.com

PROJECT TITLE
USM - CENTURY PARK SOUTH
IHL# 208-297
HATTIESBURG, MISSISSIPPI

THE UNIVERSITY OF SOUTHERN MISSISSIPPI

PROJECT NO:
- 2012020

DRAWN BY:
- MPS,CJR

CHECKED BY:
- JPH

DATE ISSUED:
- 04 MAR 2013

REVISIONS & ADDENDUMS

SHEET TITLE
BUILDING C - BUILDING SECTIONS

SHEET NUMBER
A501C

Plot Date: BID DOCUMENTS - 04 MAR 2013

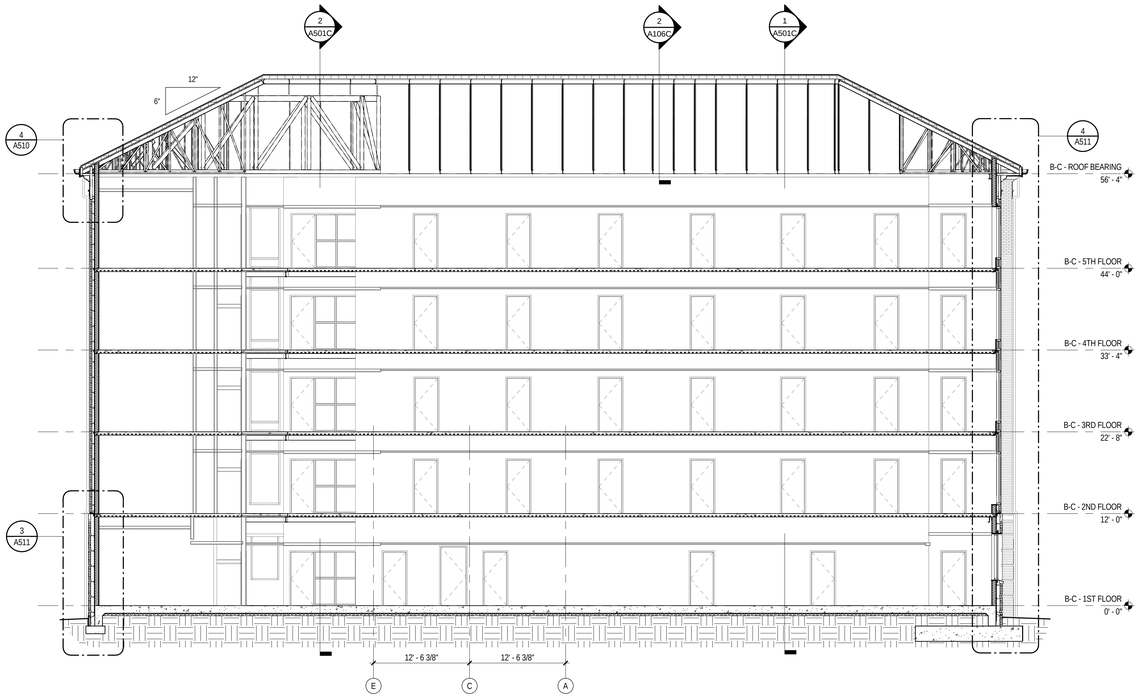

1 BUILDING C - NORTH-SOUTH SECTION
1/8" = 1'-0" A101C

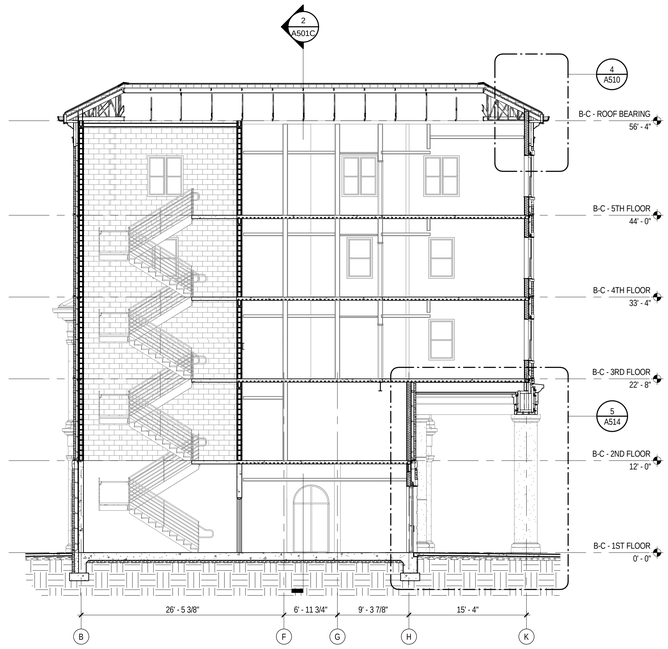

2 BUILDING C - NORTH-SOUTH SECTION
1/8" = 1'-0" A101C

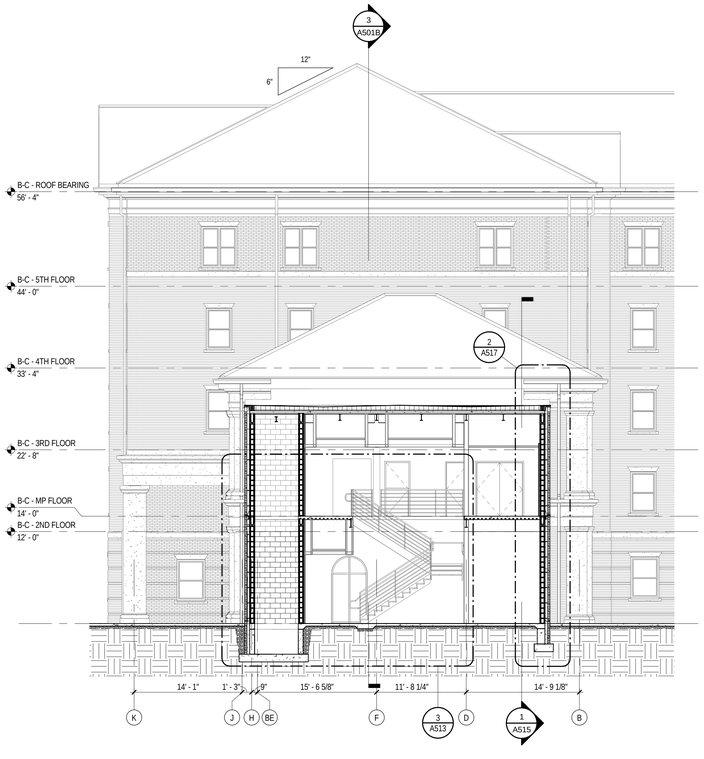

3 BUILDING C - NORTH-SOUTH SECTION
1/8" = 1'-0" A101B

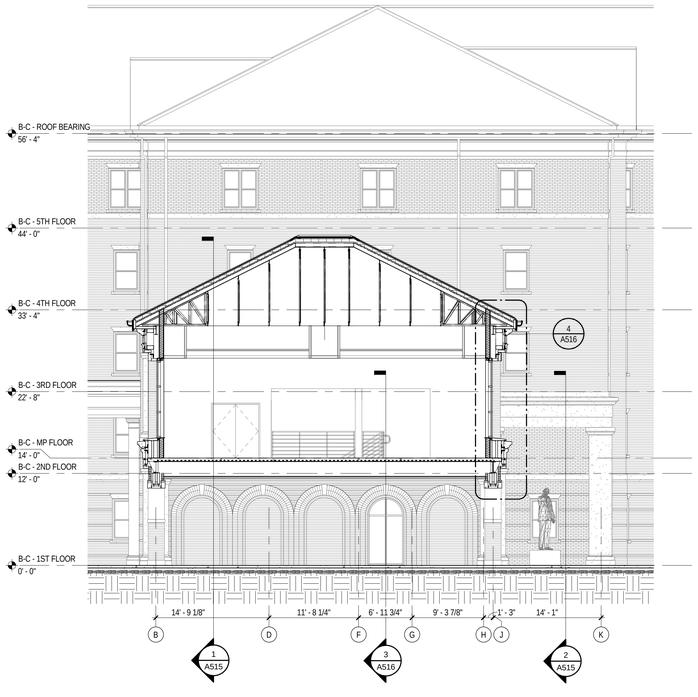

4 BUILDING C - NORTH-SOUTH PORTAL SECTION
1/8" = 1'-0" A101C

GENERAL NOTES

A PERIMETER ENVELOPE SHALL INCLUDE A "AIR BARRIER" BY SEALING THE EXTERIOR WALL ASSEMBLY TIGHT TO STRUCTURAL DECK AROUND THE ENTIRE BUILDING PERIMETER. REFER TO SPECIFICATIONS FOR MATERIALS AND ACCESSORIES NEEDED TO ACHIEVE A CONTINUOUSLY SEALED BARRIER.

B SEE SHEET A517 FOR COMPLETE DETAILS OF FACTORY-FORMED METAL TRIM, GFRC AND CAST STONE PROFILES.

C CONFIRM ALL WINDOW AND DOOR OPENING SIZES WITH MANUFACTURER.

D CONFIRM BLOCKING AND ATTACHMENT OF FACTORY-FORMED METAL TRIM, GFRC AND CAST STONE PROFILES WITH RESPECTIVE MANUFACTURERS.

E ALL EXPOSED STEEL ANGLE LINTELS TO BE FIELD PAINTED.

F UNDERSIDE OF ALL METAL FLOOR DECK AND ADJACENT STEEL STRUCTURE IN EXTERIOR SPACES WITH INTERIOR SPACE ABOVE SHALL HAVE SPRAY FOAM INSULATION APPLIED PER SPECIFICATIONS.

G EXTEND FLASHING THROUGH VENEER, ACROSS AIR SPACE BEHIND VENEER, UP AND BEHIND FACE OF CONTINUOUS INSULATION AT LEAST 8 INCHES; WITH UPPER EDGE TUCKED UNDER BUILDING WRAP, LAPPING AT LEAST 4 INCHES.

KEY PLAN

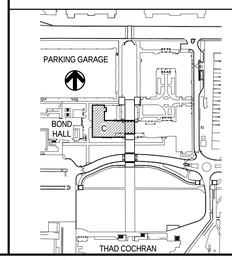

REGISTERED ARCHITECT
Thomas Bernard Saunders
3487
Tupelo, MS
STATE OF MISSISSIPPI
04 March 2013

THE McCARTY COMPANY
DESIGN GROUP, P.A.
OFFICE ADDRESS:
533 WEST MAIN STREET
TUPELO, MS 38804
MAILING ADDRESS:
P.O. BOX 440
TUPELO, MS 38802
TELEPHONE:
(662) 844-4400
FAX:
(662) 844-0520

DESIGN ARCHITECT
Hanbury Evans Wright Vlattas + Company
120 Atlantic Street
Norfolk, VA 23510
757.321.9600
www.hewv.com

PROJECT TITLE
USM - CENTURY PARK SOUTH
IHL# 208-297
HATTIESBURG, MISSISSIPPI

THE UNIVERSITY OF SOUTHERN MISSISSIPPI

PROJECT NO: 2012020
DRAWN BY: MPS,CJR
CHECKED BY: JPH
DATE ISSUED: 04 MAR 2013

REVISIONS & ADDENDUMS

SHEET TITLE
BUILDING C - BUILDING SECTIONS

SHEET NUMBER
A502C

3/11/2013 5:37:21 AM

Plot Date: BID DOCUMENTS - 04 MAR 2013

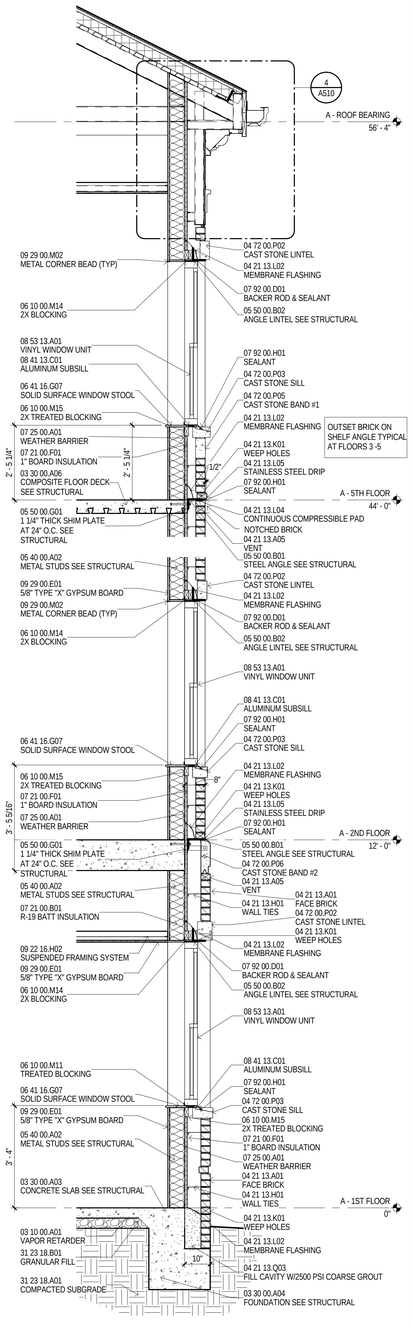

SEE SITE GRADING PLANS AND FOUNDATION PLANS FOR FINISHED GRADE ELEVATIONS AT FACE OF BUILDING AND RELATED FOUNDATION STEPPING. BRICK AIRSPACE AND WEEPS ARE TO FOLLOW GRADE CHANGES, STEPPING DOWN BRICK COURSING ACCORDINGLY, IN ORDER TO WEEP BETWEEN 2" AND 12" ABOVE ADJACENT GRADE.

1 — 1/2" = 1'-0" — BUILDING A, B, & C - TYPICAL SECTION — A101A

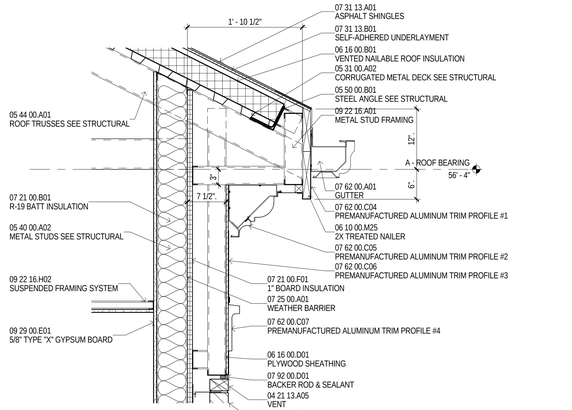

4 — 1" = 1'-0" — BUILDING A, B, & C - TYPICAL ROOF EDGE — A501A

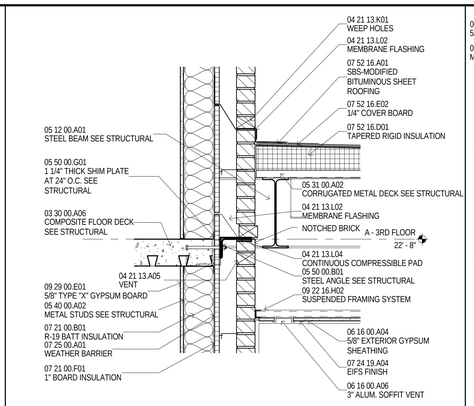

5 — 1" = 1'-0" — BUILDING A, B, & C - ENTRY ROOF DETAIL — A510

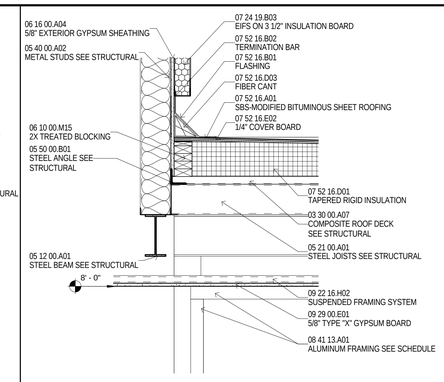

6 — 1" = 1'-0" — BUILDING A, B, & C - ROOF DRAINAGE AT STUDY — A510

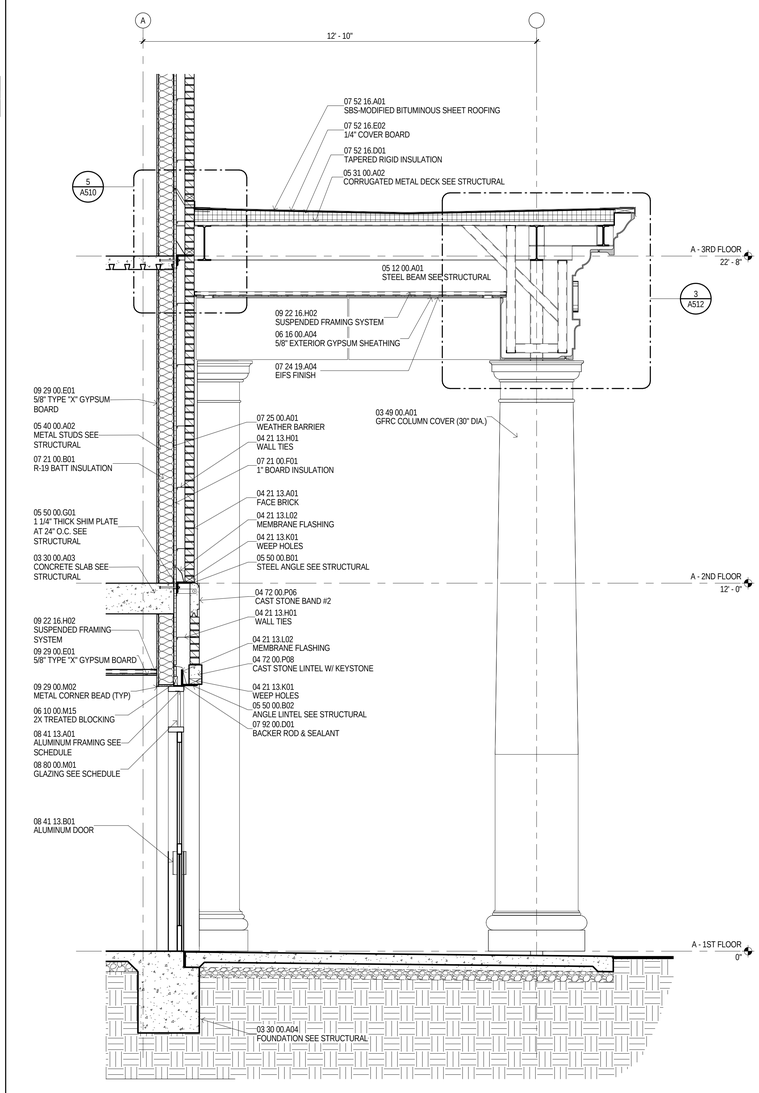

2 — 1/2" = 1'-0" — BUILDING A, B, & C - TYPICAL SECTION — A501A

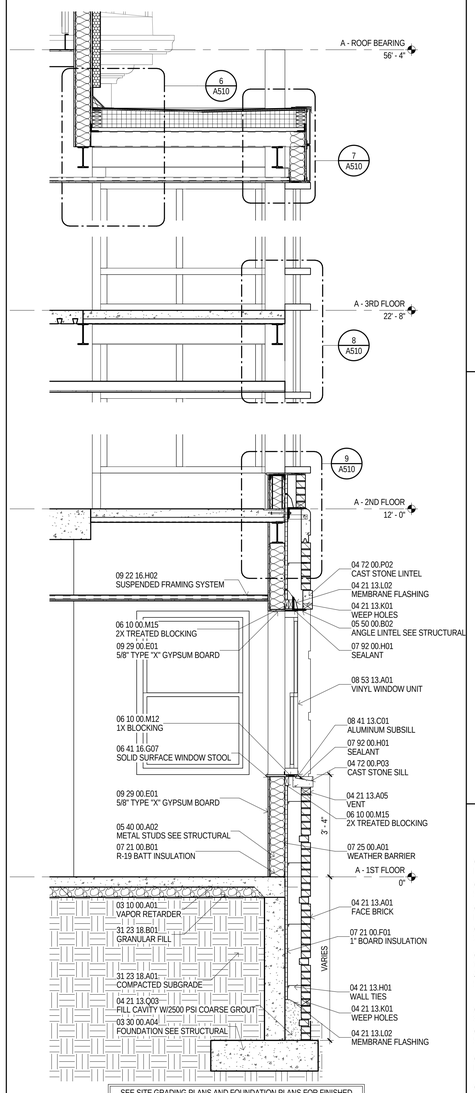

SEE SITE GRADING PLANS AND FOUNDATION PLANS FOR FINISHED GRADE ELEVATIONS AT FACE OF BUILDING AND RELATED FOUNDATION STEPPING. BRICK AIRSPACE AND WEEPS ARE TO FOLLOW GRADE CHANGES, STEPPING DOWN BRICK COURSING ACCORDINGLY, IN ORDER TO WEEP BETWEEN 2" AND 12" ABOVE ADJACENT GRADE.

3 — 1/2" = 1'-0" — BUILDING A, B, & C - TYPICAL SECTION — A101A

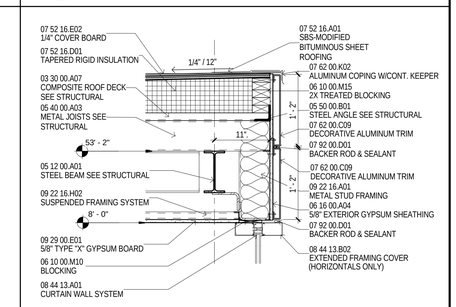

7 — 1" = 1'-0" — BUILDING A, B, & C - CURTAIN WALL HEAD @ STUDY — A510

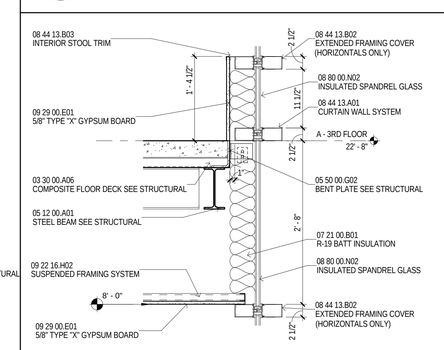

8 — 1" = 1'-0" — BUILDING A, B, & C - CURTAIN WALL @ STUDY — A510

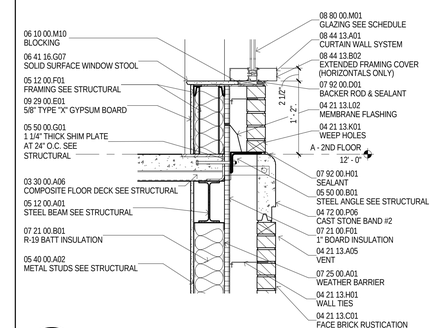

9 — 1" = 1'-0" — BUILDING A, B, & C - CURTAIN WALL SILL @ STUDY — A510

MATERIAL KEYING

03 10 00.A01	VAPOR RETARDER
03 30 00.A03	CONCRETE SLAB SEE STRUCTURAL
03 30 00.A04	FOUNDATION SEE STRUCTURAL
03 30 00.A06	COMPOSITE FLOOR DECK SEE STRUCTURAL
03 30 00.A07	COMPOSITE ROOF DECK SEE STRUCTURAL
03 49 00.A01	GFRC COLUMN COVER (30" DIA.)
04 21 13.A01	FACE BRICK
04 21 13.A05	VENT
04 21 13.C01	FACE BRICK RUSTICATION
04 21 13.H01	WALL TIES
04 21 13.K01	WEEP HOLES
04 21 13.L02	MEMBRANE FLASHING
04 21 13.L04	CONTINUOUS COMPRESSIBLE PAD
04 21 13.L05	STAINLESS STEEL DRIP
04 21 13.Q03	FILL CAVITY W/2500 PSI COARSE GROUT
04 72 00.P02	CAST STONE LINTEL
04 72 00.P03	CAST STONE SILL
04 72 00.P05	CAST STONE BAND #1
04 72 00.P06	CAST STONE BAND #2
04 72 00.P08	CAST STONE LINTEL W/ KEYSTONE
05 12 00.A01	STEEL BEAM SEE STRUCTURAL
05 12 00.B01	TUBE COLUMN SEE STRUCTURAL
05 12 00.F01	FRAMING SEE STRUCTURAL
05 21 00.A01	STEEL JOISTS SEE STRUCTURAL
05 31 00.A02	CORRUGATED METAL DECK SEE STRUCTURAL
05 40 00.A02	METAL STUDS SEE STRUCTURAL
05 40 00.A03	METAL JOISTS SEE STRUCTURAL
05 44 00.A01	ROOF TRUSSES SEE STRUCTURAL
05 50 00.B01	STEEL ANGLE SEE STRUCTURAL
05 50 00.B02	ANGLE LINTEL SEE STRUCTURAL
05 50 00.G01	1 1/4" THICK SHIM PLATE AT 24" O.C. SEE STRUCTURAL
05 50 00.G02	BENT PLATE SEE STRUCTURAL
06 10 00.M10	BLOCKING
06 10 00.M11	TREATED BLOCKING
06 10 00.M12	1X BLOCKING
06 10 00.M14	2X BLOCKING
06 10 00.M15	2X TREATED BLOCKING
06 10 00.M25	2X TREATED NAILER
06 16 00.A04	5/8" EXTERIOR GYPSUM SHEATHING
06 16 00.A06	3" ALUM. SOFFIT VENT
06 16 00.B01	VENTED NAILABLE ROOF INSULATION
06 16 00.D01	PLYWOOD SHEATHING
06 41 16.G07	SOLID SURFACE WINDOW STOOL
07 21 00.B01	R-19 BATT INSULATION
07 21 00.F01	1" BOARD INSULATION
07 24 19.A04	EIFS FINISH
07 24 19.B03	EIFS ON 3 1/2" INSULATION BOARD
07 25 00.A01	WEATHER BARRIER
07 31 13.A01	ASPHALT SHINGLES
07 31 13.B01	SELF-ADHERED UNDERLAYMENT
07 52 16.A01	SBS-MODIFIED BITUMINOUS SHEET ROOFING
07 52 16.B01	FLASHING
07 52 16.B02	TERMINATION BAR
07 52 16.D01	TAPERED RIGID INSULATION
07 52 16.E02	1/4" COVER BOARD
07 62 00.A01	GUTTER
07 62 00.C04	PREMANUFACTURED ALUMINUM TRIM PROFILE #1
07 62 00.C05	PREMANUFACTURED ALUMINUM TRIM PROFILE #2
07 62 00.C06	PREMANUFACTURED ALUMINUM TRIM PROFILE #3
07 62 00.C07	PREMANUFACTURED ALUMINUM TRIM PROFILE #4
07 62 00.C09	DECORATIVE ALUMINUM TRIM
07 62 00.K02	ALUMINUM COPING W/CONT. KEEPER
07 92 00.D01	BACKER ROD & SEALANT
07 92 00.H01	SEALANT
08 41 13.A01	ALUMINUM FRAMING SEE SCHEDULE
08 41 13.B01	ALUMINUM DOOR
08 41 13.C01	ALUMINUM SUBSILL
08 44 13.A01	CURTAIN WALL SYSTEM
08 44 13.B02	EXTENDED FRAMING COVER
08 44 13.B03	INTERIOR STOOL TRIM
08 53 13.A01	VINYL WINDOW UNIT
08 80 00.M01	GLAZING SEE SCHEDULE
08 80 00.N02	INSULATED SPANDREL GLASS
09 22 16.A01	METAL STUD FRAMING
09 22 16.H02	SUSPENDED FRAMING SYSTEM
09 29 00.E01	5/8" TYPE "X" GYPSUM BOARD
09 29 00.M02	METAL CORNER BEAD (TYP)
31 23 18.A01	COMPACTED SUBGRADE
31 23 18.B01	GRANULAR FILL

GENERAL NOTES

A PERIMETER ENVELOPE SHALL INCLUDE A "AIR BARRIER" BY SEALING THE EXTERIOR WALL ASSEMBLY TIGHT TO STRUCTURAL DECK AROUND THE ENTIRE BUILDING PERIMETER. REFER TO SPECIFICATIONS FOR MATERIALS AND ACCESSORIES NEEDED TO ACHIEVE A CONTINUOUSLY SEALED BARRIER.

B SEE SHEET A517 FOR COMPLETE DETAILS OF FACTORY-FORMED METAL TRIM, GFRC AND CAST STONE PROFILES.

C CONFIRM ALL WINDOW AND DOOR OPENING SIZES WITH MANUFACTURER.

D CONFIRM BLOCKING AND ATTACHMENT OF FACTORY-FORMED METAL TRIM, GFRC AND CAST STONE PROFILES WITH RESPECTIVE MANUFACTURERS.

E ALL EXPOSED STEEL ANGLE LINTELS TO BE FIELD PAINTED.

F UNDERSIDE OF ALL METAL FLOOR DECK AND ADJACENT STEEL STRUCTURE IN EXTERIOR SPACES WITH INTERIOR SPACE ABOVE SHALL HAVE SPRAY FOAM INSULATION APPLIED PER SPECIFICATIONS.

G EXTEND FLASHING THROUGH VENEER, ACROSS AIR SPACE BEHIND VENEER, UP AND BEHIND FACE OF CONTINUOUS INSULATION AT LEAST 8 INCHES; WITH UPPER EDGE TUCKED UNDER BUILDING WRAP, LAPPING AT LEAST 4 INCHES.

REGISTERED ARCHITECT
Thomas Maxwell Saunders
3682
Tupelo, MS
STATE OF MISSISSIPPI
04 MARCH 2013

THE McCARTY COMPANY
DESIGN GROUP, P.A.
TELEPHONE: (662) 844-4400
FAX: (662) 844-0520
OFFICE ADDRESS: 533 WEST MAIN STREET TUPELO, MS 38804
MAILING ADDRESS: P.O. BOX 440 TUPELO, MS 38802

DESIGN ARCHITECT
Hanbury Evans Wright Vlattas + Company
120 Atlantic Street
Norfolk, VA 23510
757.321.9600
www.hewv.com

PROJECT TITLE
USM - CENTURY PARK SOUTH
IHL# 208-297
HATTIESBURG, MISSISSIPPI

THE UNIVERSITY OF SOUTHERN MISSISSIPPI

PROJECT NO: 2012020
DRAWN BY: MPS,CJR
CHECKED BY: JPH
DATE ISSUED: 04 MAR 2013

REVISIONS & ADDENDUMS

SHEET TITLE
WALL SECTIONS AND DETAILS

SHEET NUMBER
A510

3/11/2013 4:52:53 AM

Plot Date: BID DOCUMENTS - 04 MARCH 2013

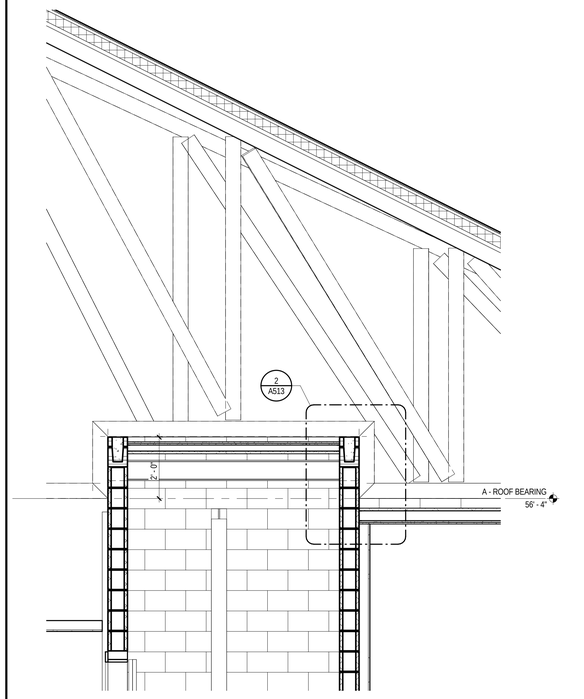

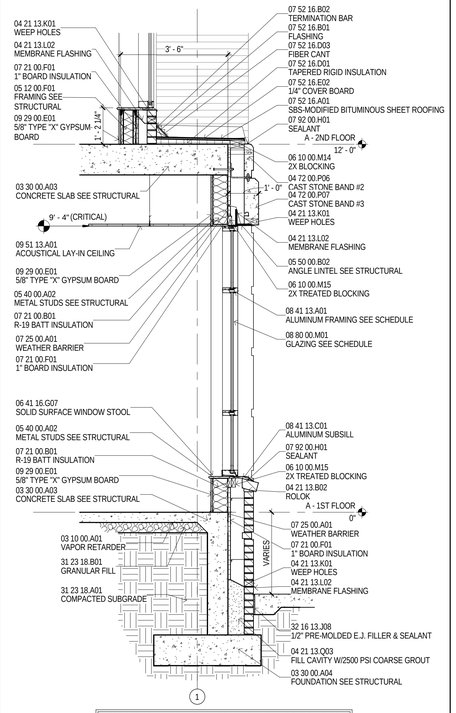

SEE SITE GRADING PLANS AND FOUNDATION PLANS FOR FINISHED GRADE ELEVATIONS AT FACE OF BUILDING AND RELATED FOUNDATION STEPPING. BRICK AIRSPACE AND WEEPS ARE TO FOLLOW GRADE CHANGES, STEPPING DOWN BRICK COURSING ACCORDINGLY, IN ORDER TO WEEP BETWEEN 2" AND 12" ABOVE ADJACENT GRADE.

2 1/2" = 1'-0" BUILDING A - WEST WALL SECTION A101A

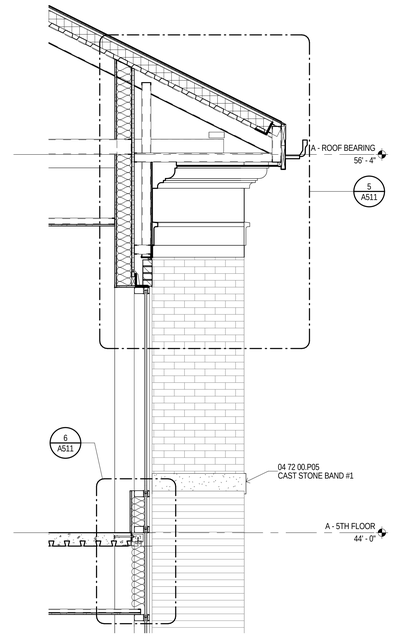

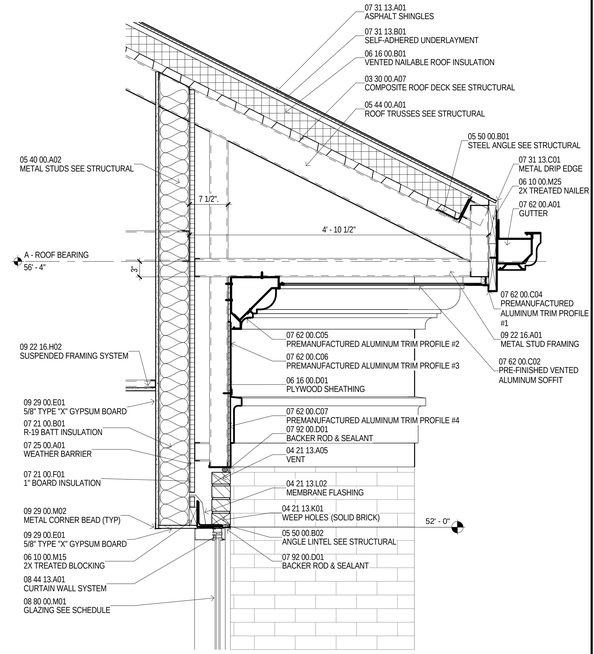

5 1" = 1'-0" BUILDING A, B, & C - CURTAIN WALL HEAD (TYPICAL) A106A

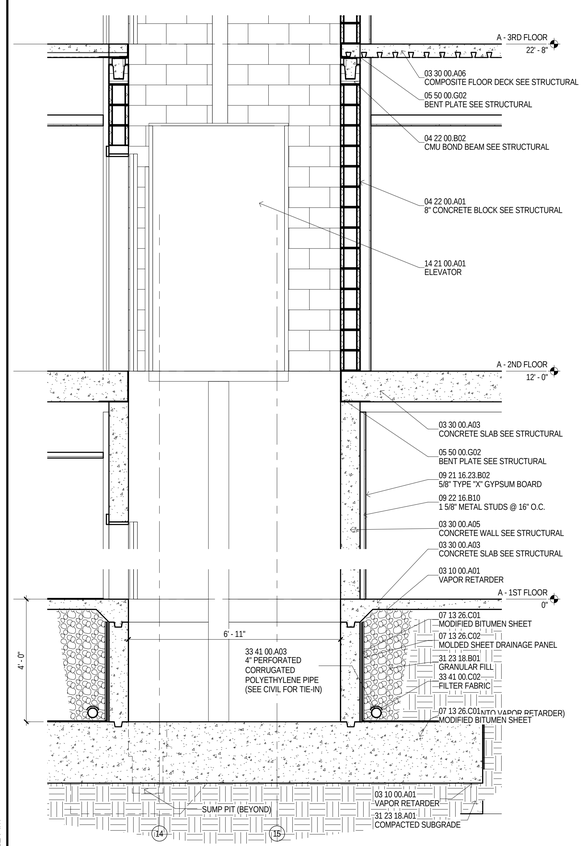

1 1/2" = 1'-0" BUILDING A - ELEVATOR SECTION A101A

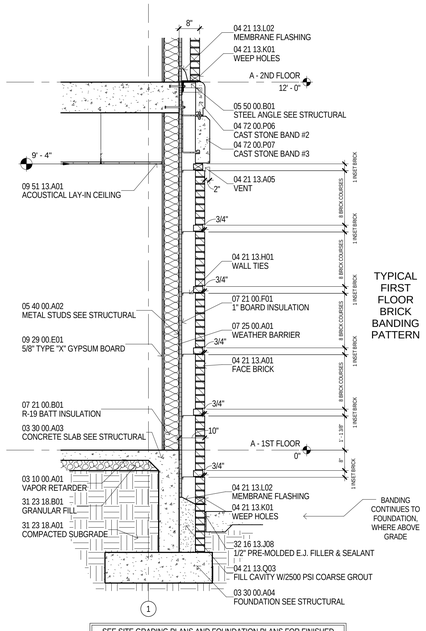

SEE SITE GRADING PLANS AND FOUNDATION PLANS FOR FINISHED GRADE ELEVATIONS AT FACE OF BUILDING AND RELATED FOUNDATION STEPPING. BRICK AIRSPACE AND WEEPS ARE TO FOLLOW GRADE CHANGES, STEPPING DOWN BRICK COURSING ACCORDINGLY, IN ORDER TO WEEP BETWEEN 2" AND 12" ABOVE ADJACENT GRADE.

3 1/2" = 1'-0" BUILDING A - WEST WALL SECTION A101A

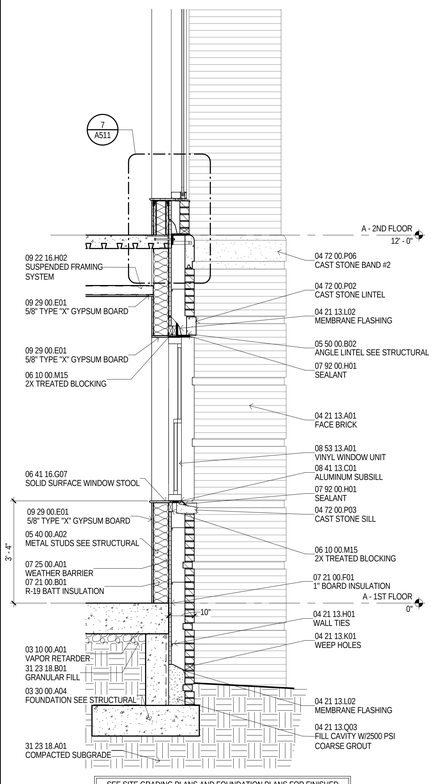

SEE SITE GRADING PLANS AND FOUNDATION PLANS FOR FINISHED GRADE ELEVATIONS AT FACE OF BUILDING AND RELATED FOUNDATION STEPPING. BRICK AIRSPACE AND WEEPS ARE TO FOLLOW GRADE CHANGES, STEPPING DOWN BRICK COURSING ACCORDINGLY, IN ORDER TO WEEP BETWEEN 2" AND 12" ABOVE ADJACENT GRADE.

4 1/2" = 1'-0" BUILDING A, B, & C - CURTAIN WALL SECTION (TYPICAL) A101A

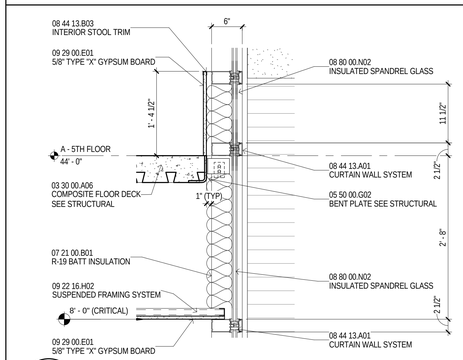

6 1" = 1'-0" BUILDING A, B, & C - CURTAIN WALL SPANDREL (TYPICAL) A511

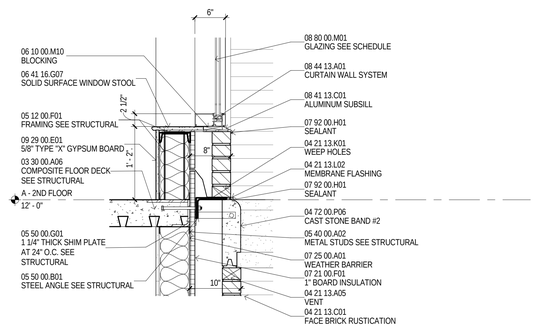

7 1" = 1'-0" BUILDING A, B, & C - CURTAIN WALL SILL (TYPICAL) A511

MATERIAL KEYING

03 10 00.A01	VAPOR RETARDER
03 30 00.A03	CONCRETE SLAB SEE STRUCTURAL
03 30 00.A04	FOUNDATION SEE STRUCTURAL
03 30 00.A05	CONCRETE WALL SEE STRUCTURAL
03 30 00.A06	COMPOSITE FLOOR DECK SEE STRUCTURAL
03 30 00.A07	COMPOSITE ROOF DECK SEE STRUCTURAL
04 21 13.A01	FACE BRICK
04 21 13.A05	VENT
04 21 13.B02	ROLOK
04 21 13.C01	FACE BRICK RUSTICATION
04 21 13.H01	WALL TIES
04 21 13.K01	WEEP HOLES
04 21 13.L02	MEMBRANE FLASHING
04 21 13.Q03	FILL CAVITY W/2500 PSI COARSE GROUT
04 22 00.A01	8" CONCRETE BLOCK SEE STRUCTURAL
04 22 00.B02	CMU BOND BEAM SEE STRUCTURAL
04 72 00.P02	CAST STONE LINTEL
04 72 00.P03	CAST STONE SILL
04 72 00.P05	CAST STONE BAND #1
04 72 00.P06	CAST STONE BAND #2
04 72 00.P07	CAST STONE BAND #3
05 12 00.F01	FRAMING SEE STRUCTURAL
05 40 00.A02	METAL STUDS SEE STRUCTURAL
05 44 00.A01	ROOF TRUSSES SEE STRUCTURAL
05 50 00.B01	STEEL ANGLE SEE STRUCTURAL
05 50 00.B02	ANGLE LINTEL SEE STRUCTURAL
05 50 00.G01	1 1/4" THICK SHIM PLATE AT 24" O.C. SEE STRUCTURAL
05 50 00.G02	BENT PLATE SEE STRUCTURAL
06 10 00.M10	BLOCKING
06 10 00.M14	2X BLOCKING
06 10 00.M15	2X TREATED BLOCKING
06 10 00.M25	2X TREATED NAILER
06 16 00.B01	VENTED NAILABLE ROOF INSULATION
06 16 00.D01	PLYWOOD SHEATHING
06 41 16.G07	SOLID SURFACE WINDOW STOOL
07 13 26.C01	MODIFIED BITUMEN SHEET
07 13 26.C02	MOLDED SHEET DRAINAGE PANEL
07 21 00.B01	R-19 BATT INSULATION
07 21 00.F01	1" BOARD INSULATION
07 25 00.A01	WEATHER BARRIER
07 31 13.A01	ASPHALT SHINGLES
07 31 13.B01	SELF-ADHERED UNDERLAYMENT
07 31 13.C01	METAL DRIP EDGE
07 52 16.A01	SBS-MODIFIED BITUMINOUS SHEET ROOFING
07 52 16.B01	FLASHING
07 52 16.B02	TERMINATION BAR
07 52 16.D01	TAPERED RIGID INSULATION
07 52 16.D03	FIBER CANT
07 52 16.E02	1/4" COVER BOARD
07 62 00.A01	GUTTER
07 62 00.C02	PRE-FINISHED VENTED ALUMINUM SOFFIT
07 62 00.C04	PREMANUFACTURED ALUMINUM TRIM PROFILE #1
07 62 00.C05	PREMANUFACTURED ALUMINUM TRIM PROFILE #2
07 62 00.C06	PREMANUFACTURED ALUMINUM TRIM PROFILE #3
07 62 00.C07	PREMANUFACTURED ALUMINUM TRIM PROFILE #4
07 92 00.D01	BACKER ROD & SEALANT
07 92 00.H01	SEALANT
08 41 13.A01	ALUMINUM FRAMING SEE SCHEDULE
08 41 13.C01	ALUMINUM SUBSILL
08 44 13.A01	CURTAIN WALL SYSTEM
08 44 13.B03	INTERIOR STOOL TRIM
08 53 13.A01	VINYL WINDOW UNIT
08 80 00.M01	GLAZING SEE SCHEDULE
08 80 00.N02	INSULATED SPANDREL GLASS
09 21 16.23.B02	5/8" TYPE "X" GYPSUM BOARD
09 22 16.A01	METAL STUD FRAMING
09 22 16.B10	1 5/8" METAL STUDS @ 16" O.C.
09 22 16.H02	SUSPENDED FRAMING SYSTEM
09 29 00.E01	5/8" TYPE "X" GYPSUM BOARD
09 29 00.M02	METAL CORNER BEAD (TYP)
09 51 13.A01	ACOUSTICAL LAY-IN CEILING
14 21 00.A01	ELEVATOR
31 23 18.A01	COMPACTED SUBGRADE
31 23 18.B01	GRANULAR FILL
32 16 13.J08	1/2" PRE-MOLDED E.J. FILLER & SEALANT
33 41 00.A03	4" PERFORATED CORRUGATED POLYETHYLENE PIPE
33 41 00.C02	FILTER FABRIC

GENERAL NOTES

A PERIMETER ENVELOPE SHALL INCLUDE A "AIR BARRIER" BY SEALING THE EXTERIOR WALL ASSEMBLY TIGHT TO STRUCTURAL DECK AROUND THE ENTIRE BUILDING PERIMETER. REFER TO SPECIFICATIONS FOR MATERIALS AND ACCESSORIES NEEDED TO ACHIEVE A CONTINUOUSLY SEALED BARRIER.

B SEE SHEET A517 FOR COMPLETE DETAILS OF FACTORY-FORMED METAL TRIM, GFRC AND CAST STONE PROFILES.

C CONFIRM ALL WINDOW AND DOOR OPENING SIZES WITH MANUFACTURER.

D CONFIRM BLOCKING AND ATTACHMENT OF FACTORY-FORMED METAL TRIM, GFRC AND CAST STONE PROFILES WITH RESPECTIVE MANUFACTURERS.

E ALL EXPOSED STEEL ANGLE LINTELS TO BE FIELD PAINTED.

F UNDERSIDE OF ALL METAL FLOOR DECK AND ADJACENT STEEL STRUCTURE IN EXTERIOR SPACES WITH INTERIOR SPACE ABOVE SHALL HAVE SPRAY FOAM INSULATION APPLIED PER SPECIFICATIONS.

G EXTEND FLASHING THROUGH VENEER, ACROSS AIR SPACE BEHIND VENEER, UP AND BEHIND FACE OF CONTINUOUS INSULATION AT LEAST 8 INCHES; WITH UPPER EDGE TUCKED UNDER BUILDING WRAP. LAPPING AT LEAST 4 INCHES.

REGISTERED ARCHITECT
Thomas Hanbury Saunders
3487
Tupelo, MS
STATE OF MISSISSIPPI
04 MARCH 2013

THE McCARTY COMPANY
DESIGN GROUP, P.A.
TELEPHONE: (662) 844-4400
FAX: (662) 844-0520
OFFICE ADDRESS: 533 WEST MAIN STREET TUPELO, MS 38804
MAILING ADDRESS: P.O. BOX 440 TUPELO, MS 38802

DESIGN ARCHITECT
Hanbury Evans Wright Vlattas + Company
120 Atlantic Street
Norfolk, VA 23510
757.321.9600
www.hewv.com

PROJECT TITLE
USM - CENTURY PARK SOUTH
IHL# 208-297
HATTIESBURG, MISSISSIPPI

THE UNIVERSITY OF SOUTHERN MISSISSIPPI

PROJECT NO: 2012020
DRAWN BY: MPS
CHECKED BY: JPH
DATE ISSUED: 04 MAR 2013

REVISIONS & ADDENDUMS

SHEET TITLE
WALL SECTIONS AND DETAILS

SHEET NUMBER
A511

3/11/2013 4:53:22 AM

Plot Date: BID DOCUMENTS - 04 MARCH 2013

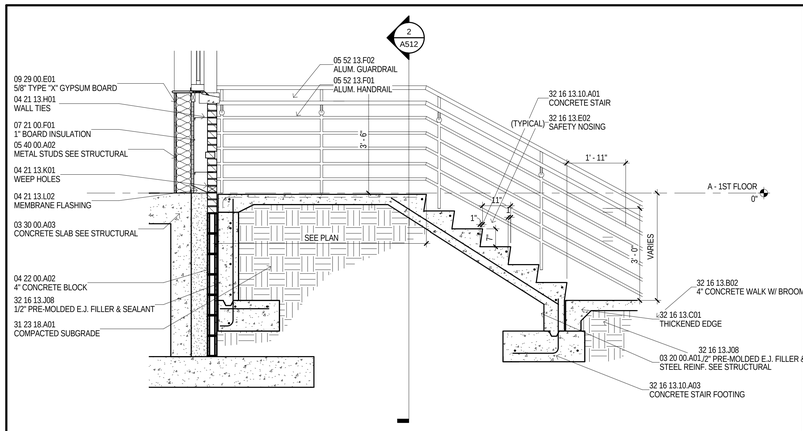

1 SITE STAIR - TYPICAL SECTION
1/2" = 1'-0" A101A

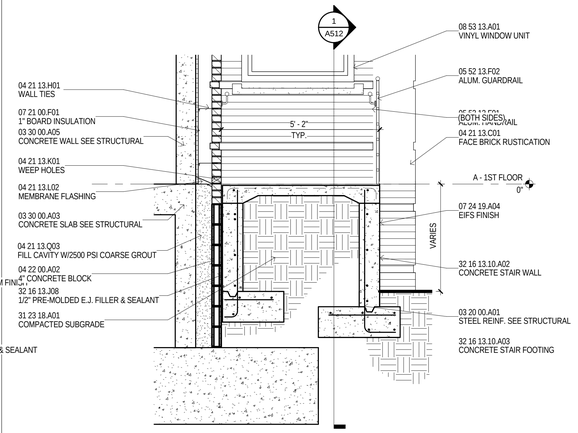

2 SITE STAIR - TYPICAL CROSS SECTION
1/2" = 1'-0" A101A

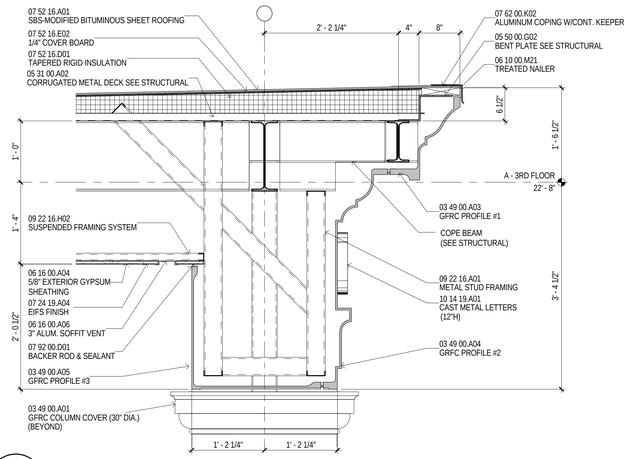

3 BUILDING A, B, & C - TYPICAL PORCH ROOF EDGE
1" = 1'-0" A510

MATERIAL KEYING

03 10 00.A01	VAPOR RETARDER
03 20 00.A01	STEEL REINF. SEE STRUCTURAL
03 30 00.A03	CONCRETE SLAB SEE STRUCTURAL
03 30 00.A04	FOUNDATION SEE STRUCTURAL
03 30 00.A05	CONCRETE WALL SEE STRUCTURAL
03 30 00.A06	COMPOSITE FLOOR DECK SEE STRUCTURAL
03 49 00.A01	GFRC COLUMN COVER (30" DIA.)
03 49 00.A03	GFRC PROFILE #1
03 49 00.A04	GFRC PROFILE #2
03 49 00.A05	GFRC PROFILE #3
04 21 13.C01	FACE BRICK RUSTICATION
04 21 13.H01	WALL TIES
04 21 13.K01	WEEP HOLES
04 21 13.L02	MEMBRANE FLASHING
04 21 13.Q03	FILL CAVITY W/2500 PSI COARSE GROUT
04 22 00.A02	4" CONCRETE BLOCK
05 31 00.A02	CORRUGATED METAL DECK SEE STRUCTURAL
05 40 00.A02	METAL STUDS SEE STRUCTURAL
05 50 00.G02	BENT PLATE SEE STRUCTURAL
05 51 13.A01	CHANNEL STRINGER
05 51 13.A04	METAL PAN STAIR LANDING
05 51 13.A06	CONCRETE FILL AT PAN
05 51 13.C01	METAL PAN STAIR
05 52 13.B01	1 1/2" DIA. STEEL PIPE HANDRAIL
05 52 13.B03	STEEL PIPE GUARDRAIL
05 52 13.F01	ALUM. HANDRAIL
05 52 13.F02	ALUM. GUARDRAIL
06 10 00.M21	TREATED NAILER
06 16 00.A04	5/8" EXTERIOR GYPSUM SHEATHING
06 16 00.A06	3" ALUM. SOFFIT VENT
07 21 00.F01	1" BOARD INSULATION
07 24 19.A04	EIFS FINISH
07 52 16.A01	SBS-MODIFIED BITUMINOUS SHEET ROOFING
07 52 16.D01	TAPERED RIGID INSULATION
07 52 16.E02	1/4" COVER BOARD
07 62 00.K02	ALUMINUM COPING W/CONT. KEEPER
07 92 00.D01	BACKER ROD & SEALANT
08 53 13.A01	VINYL WINDOW UNIT
09 22 16.A01	METAL STUD FRAMING
09 22 16.H02	SUSPENDED FRAMING SYSTEM
09 29 00.E01	5/8" TYPE "X" GYPSUM BOARD
10 14 19.A01	CAST METAL LETTERS
31 23 18.A01	COMPACTED SUBGRADE
31 23 18.B01	GRANULAR FILL
32 16 13.10.A01	CONCRETE STAIR
32 16 13.10.A02	CONCRETE STAIR WALL
32 16 13.10.A03	CONCRETE STAIR FOOTING
32 16 13.B02	4" CONCRETE WALK W/ BROOM FINISH
32 16 13.C01	THICKENED EDGE
32 16 13.E02	SAFETY NOSING
32 16 13.J08	1/2" PRE-MOLDED E.J. FILLER & SEALANT

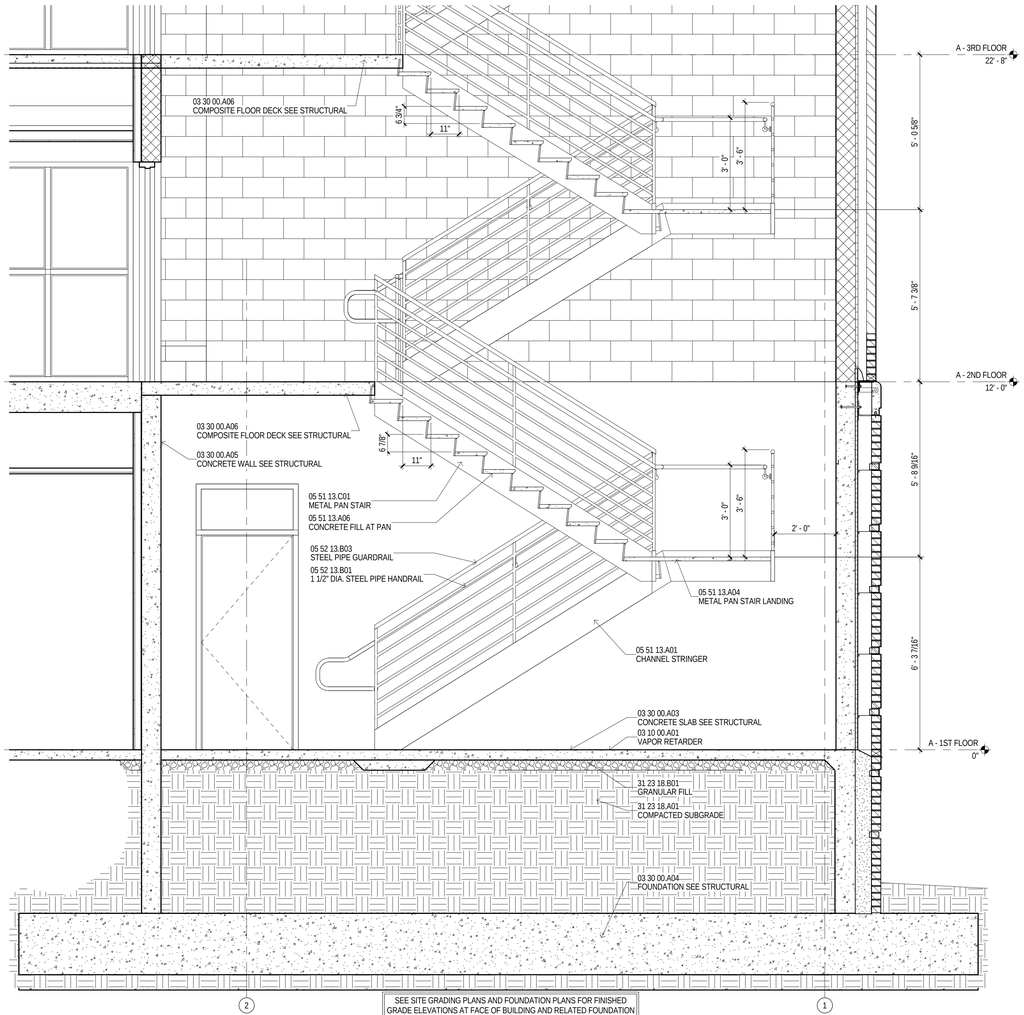

SEE SITE GRADING PLANS AND FOUNDATION PLANS FOR FINISHED GRADE ELEVATIONS AT FACE OF BUILDING AND RELATED FOUNDATION STEPPING. BRICK AIRSPACE AND WEEPS ARE TO FOLLOW GRADE CHANGES, STEPPING DOWN BRICK COURSING ACCORDINGLY, IN ORDER TO WEEP BETWEEN 2" AND 12" ABOVE ADJACENT GRADE.

4 BUILDING A - TYPICAL STAIR SECTION
1/2" = 1'-0" A101A

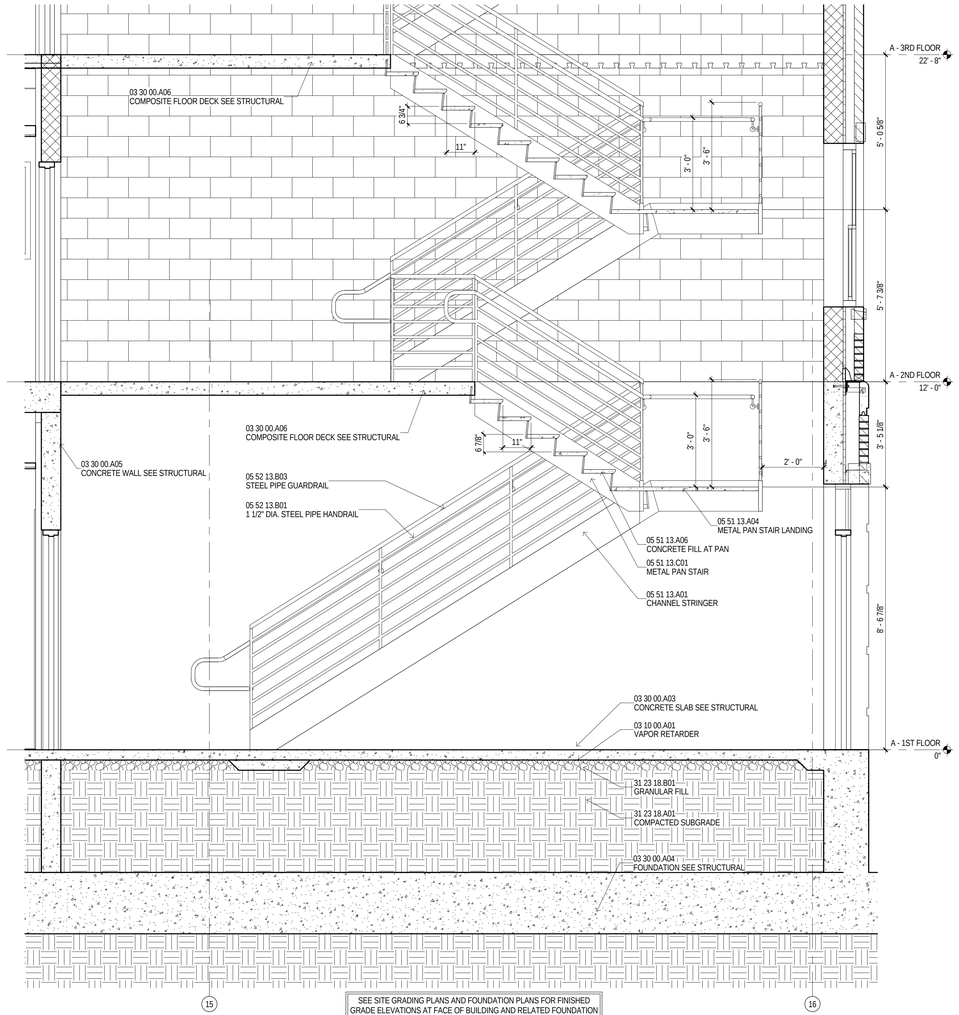

SEE SITE GRADING PLANS AND FOUNDATION PLANS FOR FINISHED GRADE ELEVATIONS AT FACE OF BUILDING AND RELATED FOUNDATION STEPPING. BRICK AIRSPACE AND WEEPS ARE TO FOLLOW GRADE CHANGES, STEPPING DOWN BRICK COURSING ACCORDINGLY, IN ORDER TO WEEP BETWEEN 2" AND 12" ABOVE ADJACENT GRADE.

5 BUILDING A - EAST STAIR SECTION
1/2" = 1'-0" A101A

GENERAL NOTES

A PERIMETER ENVELOPE SHALL INCLUDE A "AIR BARRIER" BY SEALING THE EXTERIOR WALL ASSEMBLY TIGHT TO STRUCTURAL DECK AROUND THE ENTIRE BUILDING PERIMETER. REFER TO SPECIFICATIONS FOR MATERIALS AND ACCESSORIES NEEDED TO ACHIEVE A CONTINUOUSLY SEALED BARRIER.

B SEE SHEET A517 FOR COMPLETE DETAILS OF FACTORY-FORMED METAL TRIM, GFRC AND CAST STONE PROFILES.

C CONFIRM ALL WINDOW AND DOOR OPENING SIZES WITH MANUFACTURER.

D CONFIRM BLOCKING AND ATTACHMENT OF FACTORY-FORMED METAL TRIM, GFRC AND CAST STONE PROFILES WITH RESPECTIVE MANUFACTURERS.

E ALL EXPOSED STEEL ANGLE LINTELS TO BE FIELD PAINTED.

F UNDERSIDE OF ALL METAL FLOOR DECK AND ADJACENT STEEL STRUCTURE IN EXTERIOR SPACES WITH INTERIOR SPACE ABOVE SHALL HAVE SPRAY FOAM INSULATION APPLIED PER SPECIFICATIONS.

G EXTEND FLASHING THROUGH VENEER, ACROSS AIR SPACE BEHIND VENEER, UP AND BEHIND FACE OF CONTINUOUS INSULATION AT LEAST 8 INCHES; WITH UPPER EDGE TUCKED UNDER BUILDING WRAP, LAPPING AT LEAST 4 INCHES.

REGISTERED ARCHITECT
Thomas Hanvounis
3462
Tupelo, MS
STATE OF MISSISSIPPI
04 March 2013

THE McCARTY COMPANY
DESIGN GROUP, P.A.
TELEPHONE: (662) 844-4400
FAX: (662) 844-0520
OFFICE ADDRESS: 533 WEST MAIN STREET TUPELO, MS 38804
MAILING ADDRESS: P.O. BOX 440 TUPELO, MS 38802

DESIGN ARCHITECT
Hanbury Evans Wright Vlattas + Company
120 Atlantic Street
Norfolk, VA 23510
757.321.9600
www.hewv.com

PROJECT TITLE
USM - CENTURY PARK SOUTH
IHL# 208-297
HATTIESBURG, MISSISSIPPI

THE UNIVERSITY OF SOUTHERN MISSISSIPPI

PROJECT NO: 2012020
DRAWN BY: MPS
CHECKED BY: JPH
DATE ISSUED: 04 MAR 2013

REVISIONS & ADDENDUMS

SHEET TITLE
WALL SECTIONS AND DETAILS

SHEET NUMBER
A512

3/11/2013 4:53:58 AM

Plot Date: BID DOCUMENTS - 04 MARCH 2013

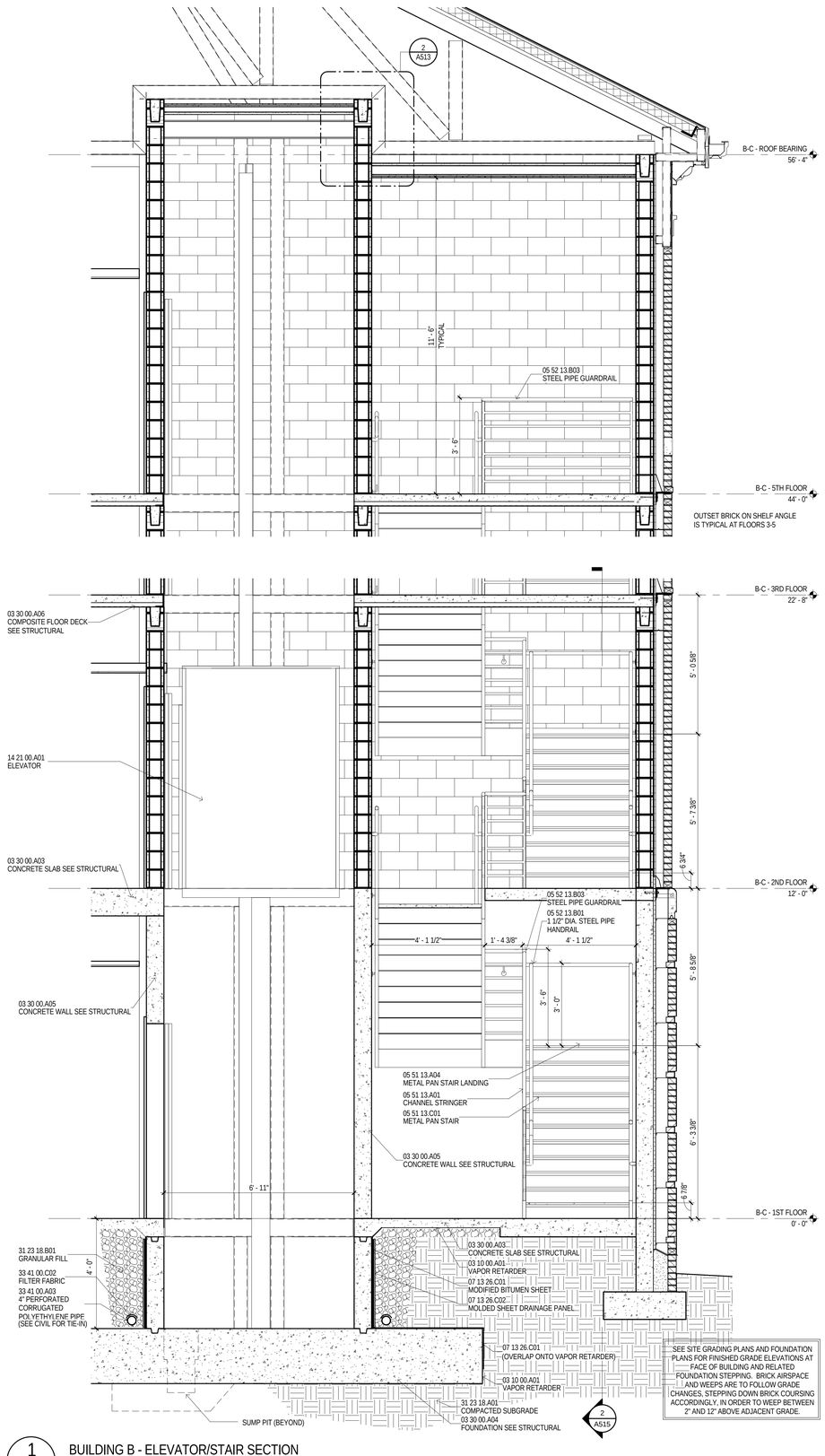

1 BUILDING B - ELEVATOR/STAIR SECTION
1/2" = 1'-0"
A101B

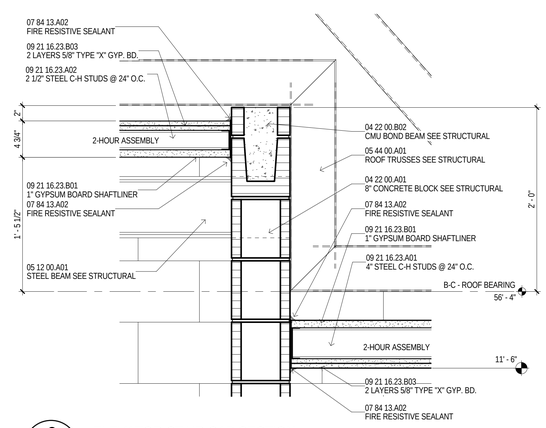

2 ELEVATOR-STAIR CAP SECTION
1 1/2" = 1'-0"
A513

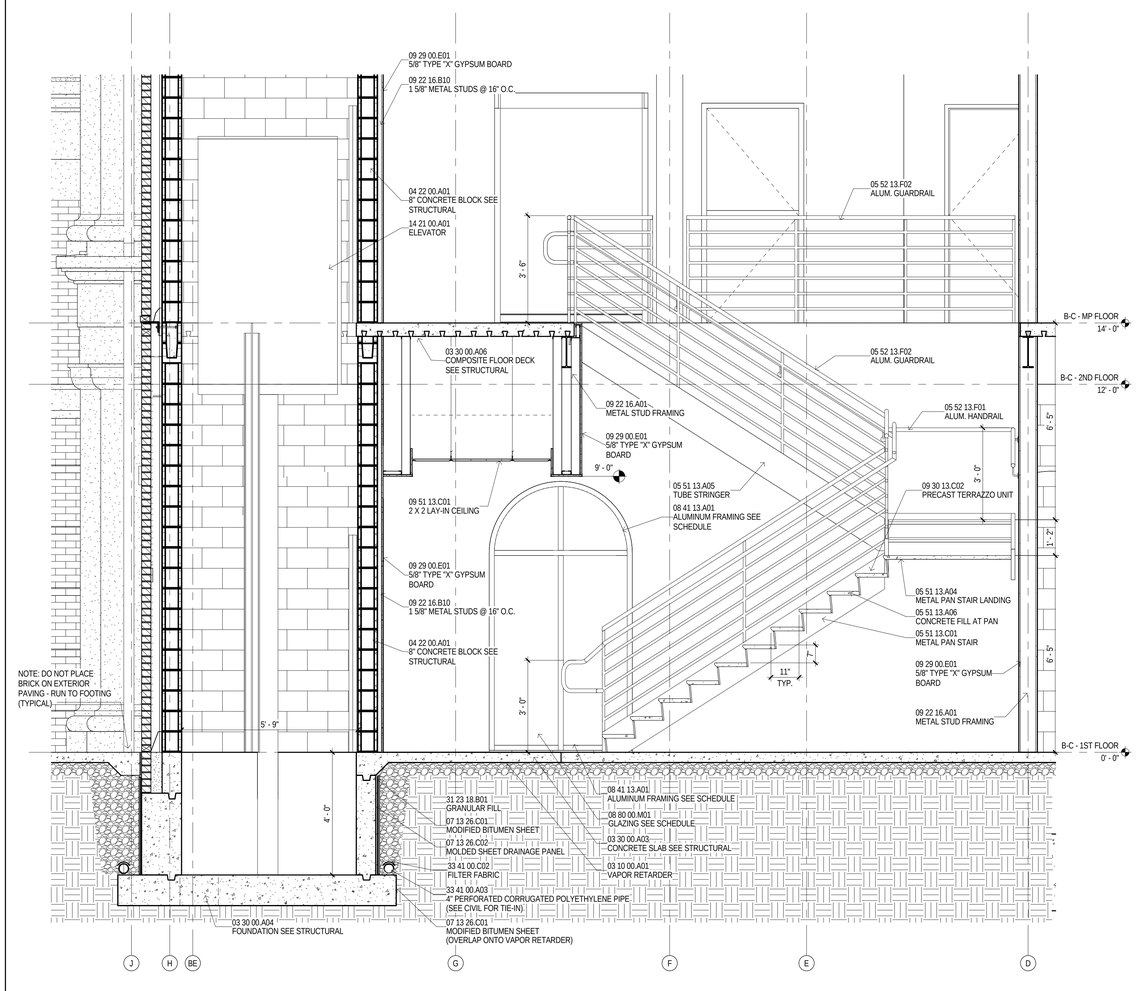

3 BUILDING B (LUCKYDAY) - ELEVATOR/STAIR SECTION
1/2" = 1'-0"
A502C

MATERIAL KEYING

03 10 00.A01	VAPOR RETARDER
03 30 00.A03	CONCRETE SLAB SEE STRUCTURAL
03 30 00.A04	FOUNDATION SEE STRUCTURAL
03 30 00.A05	CONCRETE WALL SEE STRUCTURAL
03 30 00.A06	COMPOSITE FLOOR DECK SEE STRUCTURAL
04 22 00.A01	8" CONCRETE BLOCK SEE STRUCTURAL
04 22 00.B02	CMU BOND BEAM SEE STRUCTURAL
05 12 00.A01	STEEL BEAM SEE STRUCTURAL
05 44 00.A01	ROOF TRUSSES SEE STRUCTURAL
05 51 13.A01	CHANNEL STRINGER
05 51 13.A04	METAL PAN STAIR LANDING
05 51 13.A05	TUBE STRINGER
05 51 13.A06	CONCRETE FILL AT PAN
05 51 13.C01	METAL PAN STAIR
05 52 13.B01	1 1/2" DIA. STEEL PIPE HANDRAIL
05 52 13.B03	STEEL PIPE GUARDRAIL
05 52 13.F01	ALUM. HANDRAIL
05 52 13.F02	ALUM. GUARDRAIL
07 13 26.C01	MODIFIED BITUMEN SHEET
07 13 26.C02	MOLDED SHEET DRAINAGE PANEL
07 84 13.A02	FIRE RESISTIVE SEALANT
08 41 13.A01	ALUMINUM FRAMING SEE SCHEDULE
08 80 00.M01	GLAZING SEE SCHEDULE
09 21 16.23.A01	4" STEEL C-H STUDS @ 24" O.C.
09 21 16.23.A02	2 1/2" STEEL C-H STUDS @ 24" O.C.
09 21 16.23.B01	1" GYPSUM BOARD SHAFTLINER
09 21 16.23.B02	5/8" TYPE "X" GYPSUM BOARD
09 21 16.23.B03	2 LAYERS 5/8" TYPE "X" GYP. BD.
09 22 16.A01	METAL STUD FRAMING
09 22 16.B10	1 5/8" METAL STUDS @ 16" O.C.
09 29 00.E01	5/8" TYPE "X" GYPSUM BOARD
09 30 13.C02	PRECAST TERRAZZO UNIT
09 51 13.C01	2 X 2 LAY-IN CEILING
14 21 00.A01	ELEVATOR
31 23 18.A01	COMPACTED SUBGRADE
31 23 18.B01	GRANULAR FILL
33 41 00.A03	4" PERFORATED CORRUGATED POLYETHYLENE PIPE
33 41 00.C02	FILTER FABRIC

GENERAL NOTES

A PERIMETER ENVELOPE SHALL INCLUDE A "AIR BARRIER" BY SEALING THE EXTERIOR WALL ASSEMBLY TIGHT TO STRUCTURAL DECK AROUND THE ENTIRE BUILDING PERIMETER. REFER TO SPECIFICATIONS FOR MATERIALS AND ACCESSORIES NEEDED TO ACHIEVE A CONTINUOUSLY SEALED BARRIER.

B SEE SHEET A517 FOR COMPLETE DETAILS OF FACTORY-FORMED METAL TRIM, GFRC AND CAST STONE PROFILES.

C CONFIRM ALL WINDOW AND DOOR OPENING SIZES WITH MANUFACTURER.

D CONFIRM BLOCKING AND ATTACHMENT OF FACTORY-FORMED METAL TRIM, GFRC AND CAST STONE PROFILES WITH RESPECTIVE MANUFACTURERS.

E ALL EXPOSED STEEL ANGLE LINTELS TO BE FIELD PAINTED.

F UNDERSIDE OF ALL METAL FLOOR DECK AND ADJACENT STEEL STRUCTURE IN EXTERIOR SPACES WITH INTERIOR SPACE ABOVE SHALL HAVE SPRAY FOAM INSULATION APPLIED PER SPECIFICATIONS.

G EXTEND FLASHING THROUGH VENEER, ACROSS AIR SPACE BEHIND VENEER, UP AND BEHIND FACE OF CONTINUOUS INSULATION AT LEAST 8 INCHES, WITH UPPER EDGE TUCKED UNDER BUILDING WRAP, LAPPING AT LEAST 4 INCHES.

REGISTERED ARCHITECT
Thomas McCaughan's
Tupelo, MS
STATE OF MISSISSIPPI
04 march 2013

THE McCARTY COMPANY
DESIGN GROUP, P.A.
OFFICE ADDRESS:
533 WEST MAIN STREET
TUPELO, MS 38804
TELEPHONE:
(662) 844-4400
FAX:
(662) 844-0520
MAILING ADDRESS:
P.O. BOX 440
TUPELO, MS 38802

DESIGN ARCHITECT
Hanbury Evans Wright Vlattas + Company
120 Atlantic Street
Norfolk, VA 23510
757.321.9600
www.hewv.com

PROJECT TITLE
USM - CENTURY PARK SOUTH
IHL# 208-297
HATTIESBURG, MISSISSIPPI

THE UNIVERSITY OF SOUTHERN MISSISSIPPI

PROJECT NO:
- 2012020

DRAWN BY:
- MPS

CHECKED BY:
- JPH

DATE ISSUED:
- 04 MAR 2013

REVISIONS & ADDENDUMS

SHEET TITLE
WALL SECTIONS AND DETAILS

SHEET NUMBER
A513

3/11/2013 5:37:47 AM

Plot Date: BID DOCUMENTS - 04 MAR 2013

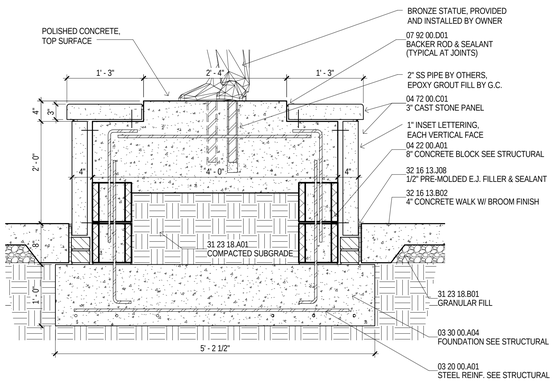

EACH SIDE OF STATUE BASE TO HAVE 1" INSET LETTERING IN CAST STONE (WORDING TO BE DETERMINED), APPROX. 50 CHARACTERS PER SIDE.

1 — STATUE BASE SECTION
1" = 1'-0" A510

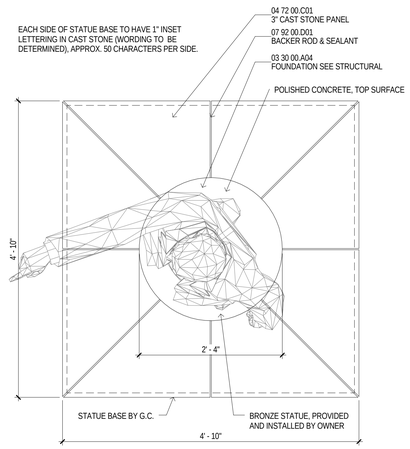

2 — STATUE BASE ENLARGED PLAN
1" = 1'-0" A101B

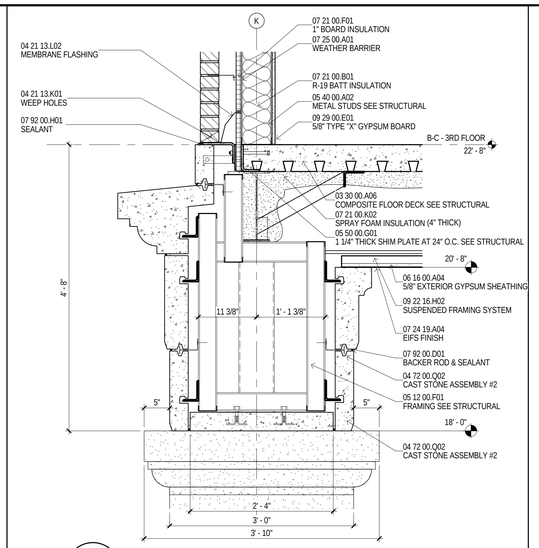

3 — SOUTH LUCKYDAY CAST STONE BEAM DETAIL
1" = 1'-0" A514

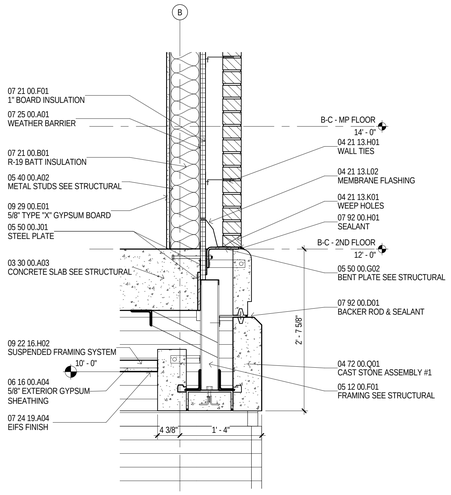

4 — SW_NORTH LUCKYDAY BEAM DETAIL
1" = 1'-0" A514

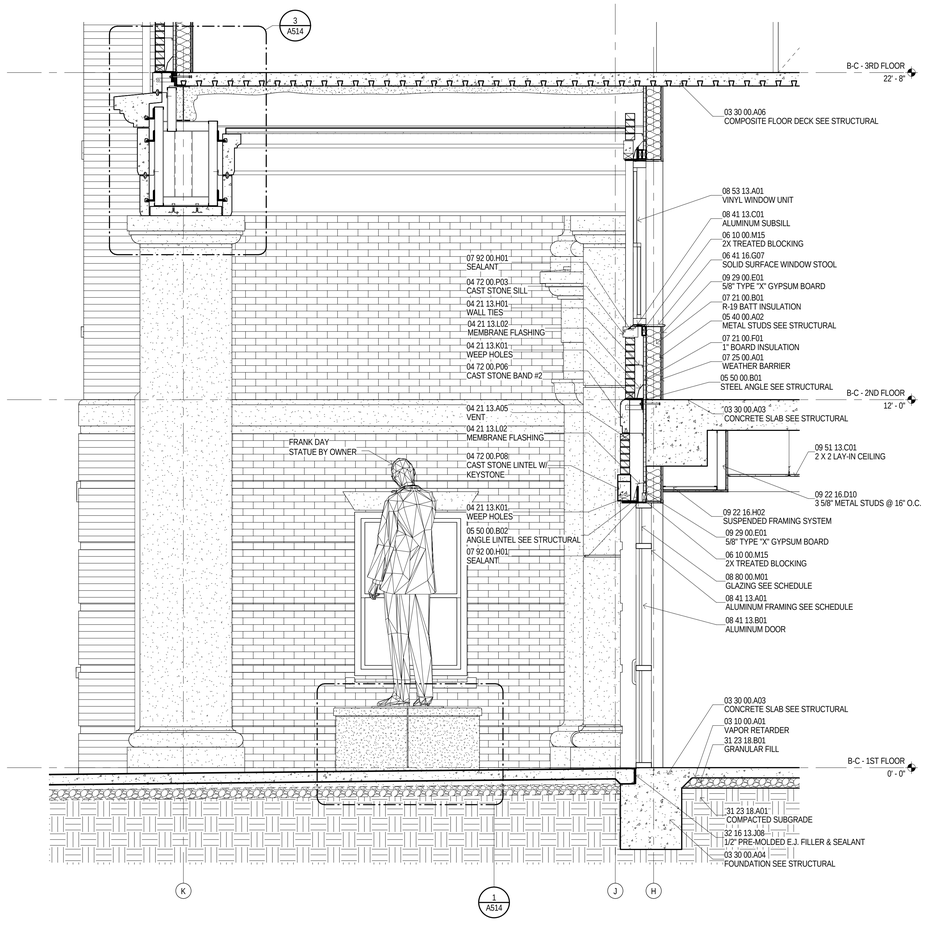

5 — BUILDING B - SOUTH ENTRY
1/2" = 1'-0" A101B

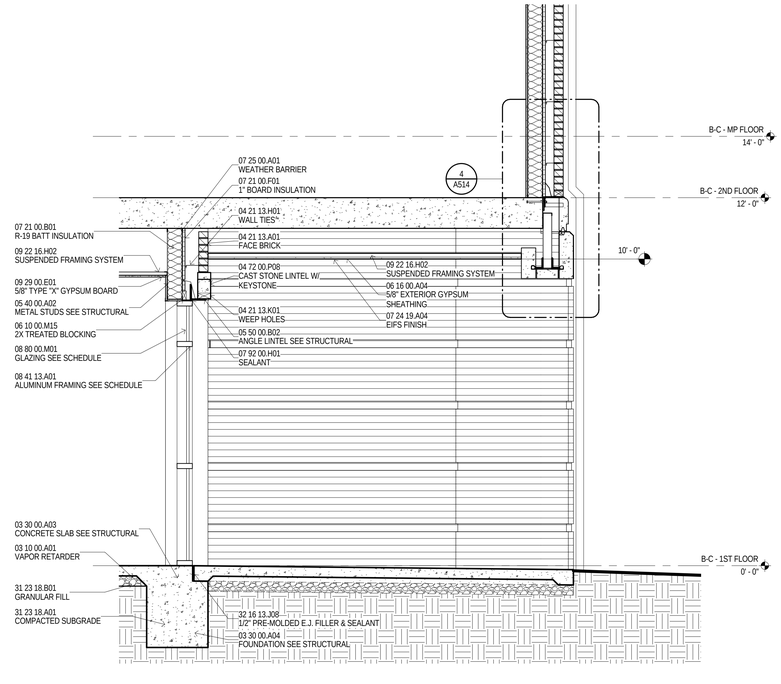

6 — BUILDING B - NORTH ENTRY
1/2" = 1'-0" A101B

MATERIAL KEYING

03 10 00.A01	VAPOR RETARDER
03 20 00.A01	STEEL REINF. SEE STRUCTURAL
03 30 00.A03	CONCRETE SLAB SEE STRUCTURAL
03 30 00.A04	FOUNDATION SEE STRUCTURAL
03 30 00.A06	COMPOSITE FLOOR DECK SEE STRUCTURAL
04 21 13.A01	FACE BRICK
04 21 13.A05	VENT
04 21 13.H01	WALL TIES
04 21 13.K01	WEEP HOLES
04 21 13.L02	MEMBRANE FLASHING
04 22 00.A01	8" CONCRETE BLOCK SEE STRUCTURAL
04 72 00.C01	3" CAST STONE PANEL
04 72 00.P03	CAST STONE SILL
04 72 00.P04	CAST STONE ORNAMENT
04 72 00.P06	CAST STONE BAND #2
04 72 00.P08	CAST STONE LINTEL W/ KEYSTONE
04 72 00.Q01	CAST STONE ASSEMBLY #1
04 72 00.Q02	CAST STONE ASSEMBLY #2
05 12 00.F01	FRAMING SEE STRUCTURAL
05 40 00.A02	METAL STUDS SEE STRUCTURAL
05 50 00.B01	STEEL ANGLE SEE STRUCTURAL
05 50 00.B02	ANGLE LINTEL SEE STRUCTURAL
05 50 00.G01	1 1/4" THICK SHIM PLATE AT 24" O.C. SEE STRUCTURAL
05 50 00.G02	BENT PLATE SEE STRUCTURAL
05 50 00.J01	STEEL PLATE
06 10 00.M15	2X TREATED BLOCKING
06 16 00.A04	5/8" EXTERIOR GYPSUM SHEATHING
06 41 16.G07	SOLID SURFACE WINDOW STOOL
07 21 00.B01	R-19 BATT INSULATION
07 21 00.F01	1" BOARD INSULATION
07 21 00.K02	SPRAY FOAM INSULATION
07 24 19.A04	EIFS FINISH
07 25 00.A01	WEATHER BARRIER
07 92 00.D01	BACKER ROD & SEALANT
07 92 00.H01	SEALANT
08 41 13.A01	ALUMINUM FRAMING SEE SCHEDULE
08 41 13.B01	ALUMINUM DOOR
08 41 13.C01	ALUMINUM SUBSILL
08 53 13.A01	VINYL WINDOW UNIT
08 80 00.M01	GLAZING SEE SCHEDULE
09 22 16.D10	3 5/8" METAL STUDS @ 16" O.C.
09 22 16.H02	SUSPENDED FRAMING SYSTEM
09 29 00.E01	5/8" TYPE "X" GYPSUM BOARD
09 51 13.C01	2 X 2 LAY-IN CEILING
31 23 18.A01	COMPACTED SUBGRADE
31 23 18.B01	GRANULAR FILL
32 16 13.B02	4" CONCRETE WALK W/ BROOM FINISH
32 16 13.J08	1/2" PRE-MOLDED E.J. FILLER & SEALANT

GENERAL NOTES

A PERIMETER ENVELOPE SHALL INCLUDE A "AIR BARRIER" BY SEALING THE EXTERIOR WALL ASSEMBLY TIGHT TO STRUCTURAL DECK AROUND THE ENTIRE BUILDING PERIMETER. REFER TO SPECIFICATIONS FOR MATERIALS AND ACCESSORIES NEEDED TO ACHIEVE A CONTINUOUSLY SEALED BARRIER.

B SEE SHEET A517 FOR COMPLETE DETAILS OF FACTORY-FORMED METAL TRIM, GFRC AND CAST STONE PROFILES.

C CONFIRM ALL WINDOW AND DOOR OPENING SIZES WITH MANUFACTURER.

D CONFIRM BLOCKING AND ATTACHMENT OF FACTORY-FORMED METAL TRIM, GFRC AND CAST STONE PROFILES WITH RESPECTIVE MANUFACTURERS.

E ALL EXPOSED STEEL ANGLE LINTELS TO BE FIELD PAINTED.

F UNDERSIDE OF ALL METAL FLOOR DECK AND ADJACENT STEEL STRUCTURE IN EXTERIOR SPACES WITH INTERIOR SPACE ABOVE SHALL HAVE SPRAY FOAM INSULATION APPLIED PER SPECIFICATIONS.

G EXTEND FLASHING THROUGH VENEER, ACROSS AIR SPACE BEHIND VENEER, UP AND BEHIND FACE OF CONTINUOUS INSULATION AT LEAST 8 INCHES; WITH UPPER EDGE TUCKED UNDER BUILDING WRAP, LAPPING AT LEAST 4 INCHES.

REGISTERED ARCHITECT — Jason Paul Hanbury — 3682 — Tupelo, MS — STATE OF MISSISSIPPI — 04 MARCH 2013

THE McCARTY COMPANY
DESIGN GROUP, P.A.
OFFICE ADDRESS: 533 WEST MAIN STREET TUPELO, MS 38804
MAILING ADDRESS: P.O. BOX 440 TUPELO, MS 38802
TELEPHONE: (662) 844-4400 FAX: (662) 844-0520

DESIGN ARCHITECT
Hanbury Evans Wright Vlattas + Company
120 Atlantic Street
Norfolk, VA 23510
757.321.9600
www.hewv.com

PROJECT TITLE
USM - CENTURY PARK SOUTH
IHL# 208-297
HATTIESBURG, MISSISSIPPI

THE UNIVERSITY OF SOUTHERN MISSISSIPPI

PROJECT NO: 2012020
DRAWN BY: MPS
CHECKED BY: JPH
DATE ISSUED: 04 MAR 2013

REVISIONS & ADDENDUMS

SHEET TITLE
WALL SECTIONS AND DETAILS

SHEET NUMBER
A514

3/11/2013 5:38:19 AM

Plot Date: BID DOCUMENTS - 04 MAR 2013

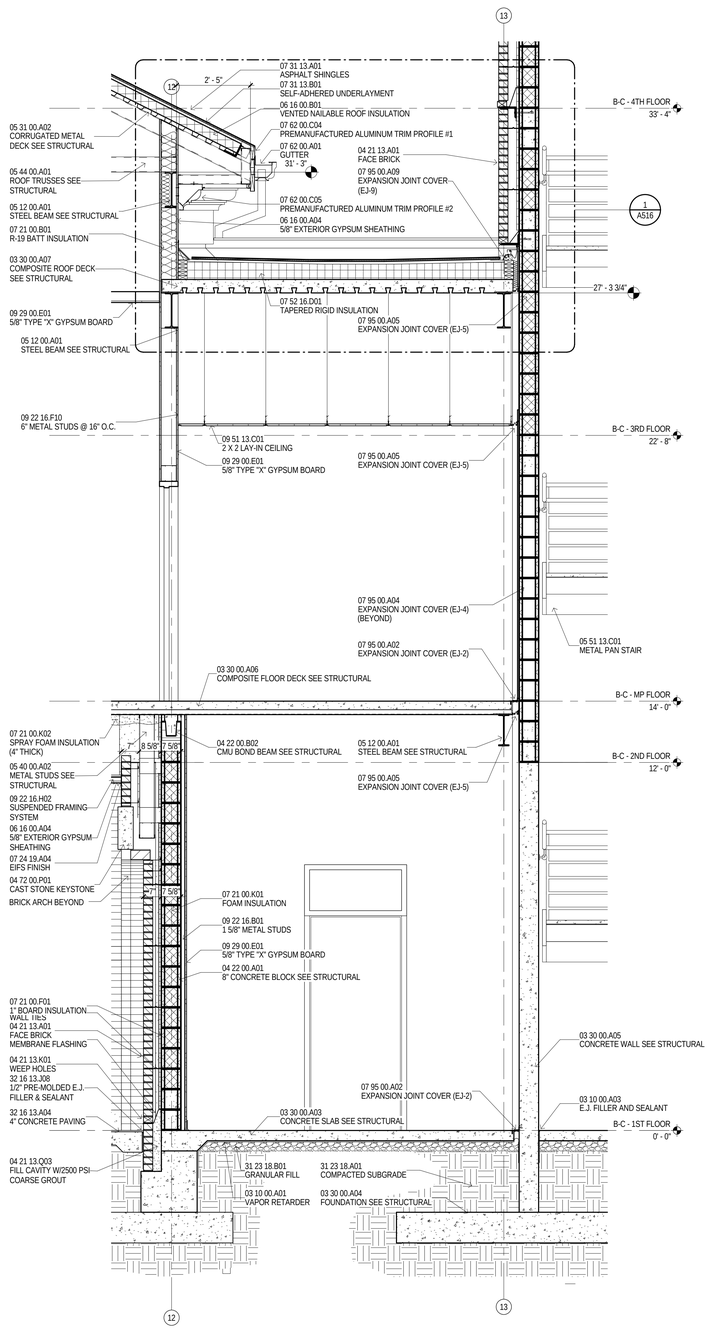

1 BUILDING B-C EXPANTSION JOINT SECTION
1/2" = 1'-0" A101B

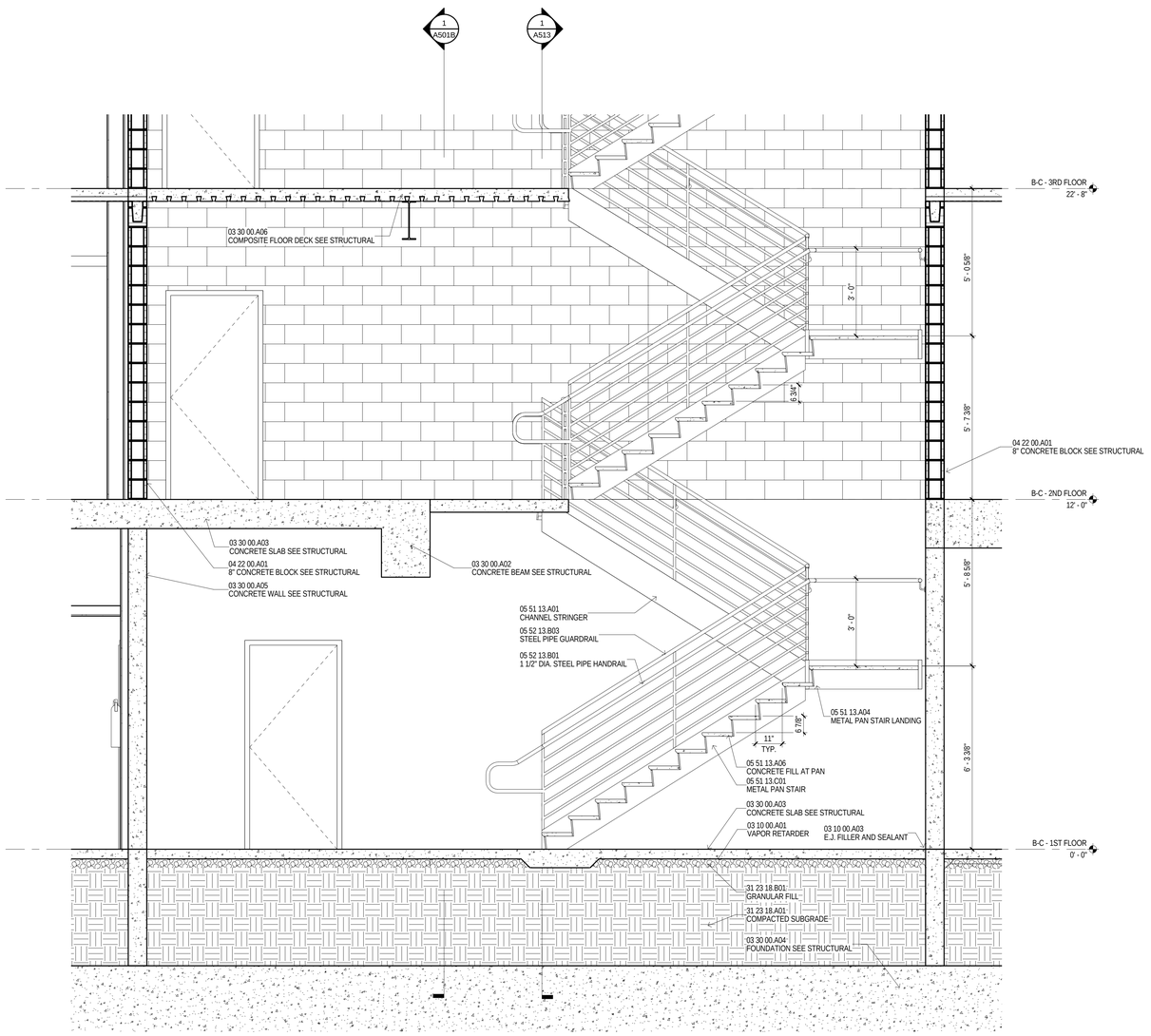

2 BUILDING B - CENTRAL STAIR SECTION
1/2" = 1'-0" A101B

MATERIAL KEYING

03 10 00.A01	VAPOR RETARDER
03 10 00.A03	E.J. FILLER AND SEALANT
03 30 00.A02	CONCRETE BEAM SEE STRUCTURAL
03 30 00.A03	CONCRETE SLAB SEE STRUCTURAL
03 30 00.A04	FOUNDATION SEE STRUCTURAL
03 30 00.A05	CONCRETE WALL SEE STRUCTURAL
03 30 00.A06	COMPOSITE FLOOR DECK SEE STRUCTURAL
03 30 00.A07	COMPOSITE ROOF DECK SEE STRUCTURAL
04 21 13.A01	FACE BRICK
04 21 13.H01	WALL TIES
04 21 13.K01	WEEP HOLES
04 21 13.L02	MEMBRANE FLASHING
04 21 13.Q03	FILL CAVITY W/2500 PSI COARSE GROUT
04 22 00.A01	8" CONCRETE BLOCK SEE STRUCTURAL
04 22 00.B02	CMU BOND BEAM SEE STRUCTURAL
04 72 00.P01	CAST STONE KEYSTONE
05 12 00.A01	STEEL BEAM SEE STRUCTURAL
05 31 00.A02	CORRUGATED METAL DECK SEE STRUCTURAL
05 40 00.A02	METAL STUDS SEE STRUCTURAL
05 44 00.A01	ROOF TRUSSES SEE STRUCTURAL
05 51 13.A01	CHANNEL STRINGER
05 51 13.A04	METAL PAN STAIR LANDING
05 51 13.A06	CONCRETE FILL AT PAN
05 51 13.C01	METAL PAN STAIR
05 52 13.B01	1 1/2" DIA. STEEL PIPE HANDRAIL
05 52 13.B03	STEEL PIPE GUARDRAIL
06 16 00.A04	5/8" EXTERIOR GYPSUM SHEATHING
06 16 00.B01	VENTED NAILABLE ROOF INSULATION
07 21 00.B01	R-19 BATT INSULATION
07 21 00.F01	1" BOARD INSULATION
07 21 00.K01	FOAM INSULATION
07 21 00.K02	SPRAY FOAM INSULATION
07 24 19.A04	EIFS FINISH
07 31 13.A01	ASPHALT SHINGLES
07 31 13.B01	SELF-ADHERED UNDERLAYMENT
07 52 16.D01	TAPERED RIGID INSULATION
07 62 00.A01	GUTTER
07 62 00.C04	PREMANUFACTURED ALUMINUM TRIM PROFILE #1
07 62 00.C05	PREMANUFACTURED ALUMINUM TRIM PROFILE #2
07 95 00.A02	EXPANSION JOINT COVER (EJ-2)
07 95 00.A04	EXPANSION JOINT COVER (EJ-4)
07 95 00.A05	EXPANSION JOINT COVER (EJ-5)
07 95 00.A09	EXPANSION JOINT COVER (EJ-9)
09 22 16.B01	1 5/8" METAL STUDS
09 22 16.F10	6" METAL STUDS @ 16" O.C.
09 22 16.H02	SUSPENDED FRAMING SYSTEM
09 29 00.E01	5/8" TYPE "X" GYPSUM BOARD
09 51 13.C01	2 X 2 LAY-IN CEILING
31 23 18.A01	COMPACTED SUBGRADE
31 23 18.B01	GRANULAR FILL
32 16 13.A04	4" CONCRETE PAVING
32 16 13.J08	1/2" PRE-MOLDED E.J. FILLER & SEALANT

GENERAL NOTES

A PERIMETER ENVELOPE SHALL INCLUDE A "AIR BARRIER" BY SEALING THE EXTERIOR WALL ASSEMBLY TIGHT TO STRUCTURAL DECK AROUND THE ENTIRE BUILDING PERIMETER. REFER TO SPECIFICATIONS FOR MATERIALS AND ACCESSORIES NEEDED TO ACHIEVE A CONTINUOUSLY SEALED BARRIER.

B SEE SHEET A517 FOR COMPLETE DETAILS OF FACTORY-FORMED METAL TRIM, GFRC AND CAST STONE PROFILES.

C CONFIRM ALL WINDOW AND DOOR OPENING SIZES WITH MANUFACTURER.

D CONFIRM BLOCKING AND ATTACHMENT OF FACTORY-FORMED METAL TRIM, GFRC AND CAST STONE PROFILES WITH RESPECTIVE MANUFACTURERS.

E ALL EXPOSED STEEL ANGLE LINTELS TO BE FIELD PAINTED.

F UNDERSIDE OF ALL METAL FLOOR DECK AND ADJACENT STEEL STRUCTURE IN EXTERIOR SPACES WITH INTERIOR SPACE ABOVE SHALL HAVE SPRAY FOAM INSULATION APPLIED PER SPECIFICATIONS.

G EXTEND FLASHING THROUGH VENEER, ACROSS AIR SPACE BEHIND VENEER, UP AND BEHIND FACE OF CONTINUOUS INSULATION AT LEAST 8 INCHES; WITH UPPER EDGE TUCKED UNDER BUILDING WRAP, LAPPING AT LEAST 4 INCHES.

REGISTERED ARCHITECT
Thomas Alexander Saunders
3687
Tupelo, MS
STATE OF MISSISSIPPI
04 MARCH 2013

THE McCARTY COMPANY
DESIGN GROUP, P.A.
OFFICE ADDRESS:
533 WEST MAIN STREET
TUPELO, MS 38804
MAILING ADDRESS:
P.O. BOX 440
TUPELO, MS 38802
TELEPHONE:
(662) 844-4400
FAX:
(662) 844-0520

DESIGN ARCHITECT
Hanbury Evans Wright Vlattas + Company
120 Atlantic Street
Norfolk, VA 23510
757.321.9600
www.hewv.com

PROJECT TITLE
USM - CENTURY PARK SOUTH
IHL# 208-297
HATTIESBURG, MISSISSIPPI

THE UNIVERSITY OF SOUTHERN MISSISSIPPI

PROJECT NO: 2012020
DRAWN BY: MPS
CHECKED BY: JPH
DATE ISSUED: 04 MAR 2013

REVISIONS & ADDENDUMS

SHEET TITLE
WALL SECTIONS AND DETAILS

SHEET NUMBER
A515

3/11/2013 5:38:52 AM

Plot Date: BID DOCUMENTS - 04 MAR 2013

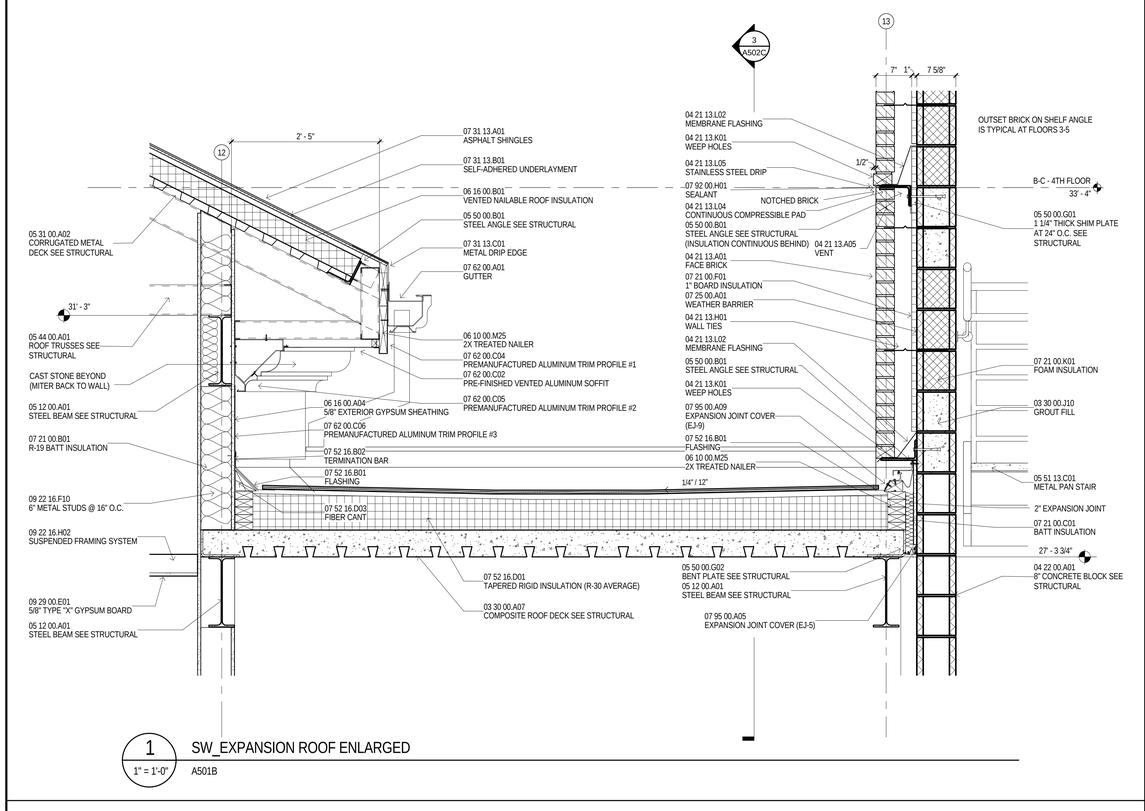

1 — SW_EXPANSION ROOF ENLARGED
1" = 1'-0"
A501B

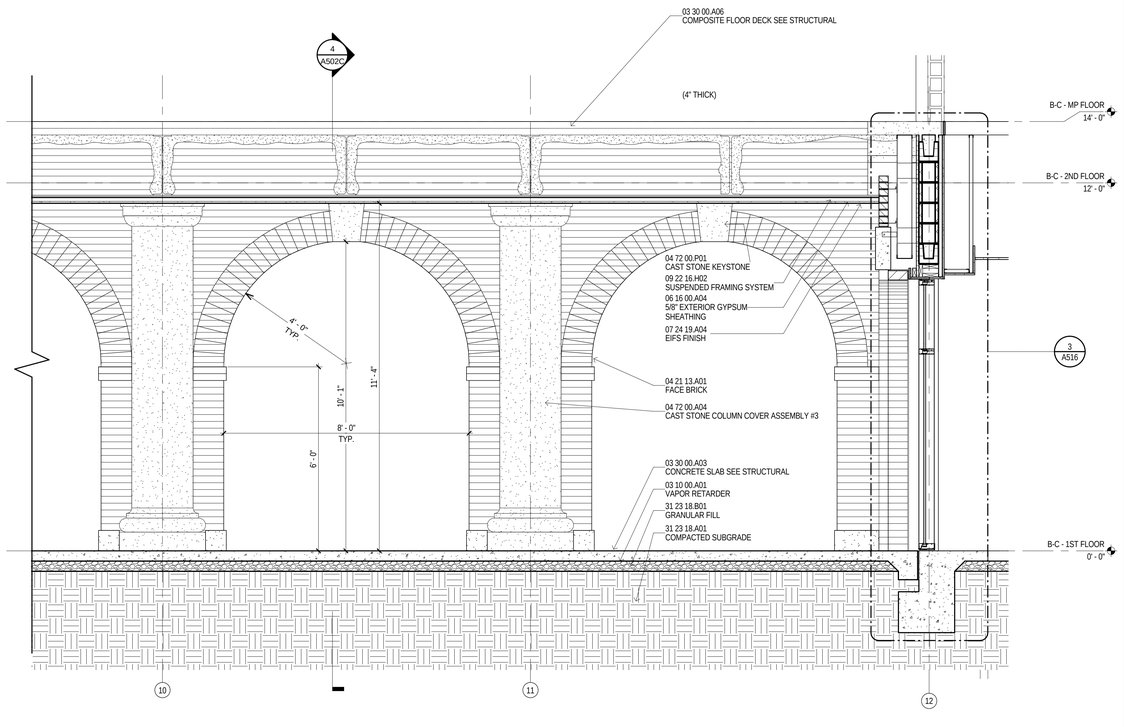

2 — BUILDING C - SECTION AT PORTAL
1/2" = 1'-0"
A101B

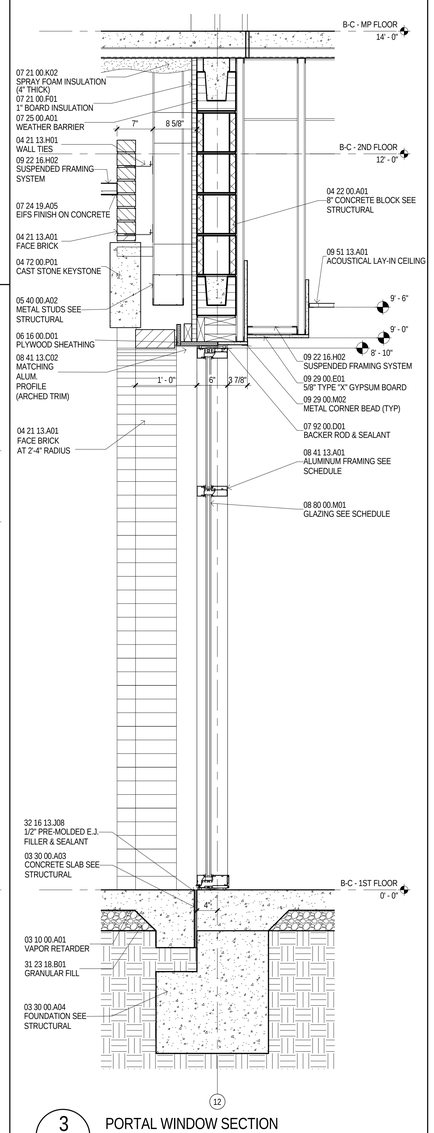

3 — PORTAL WINDOW SECTION
1" = 1'-0"
A502C

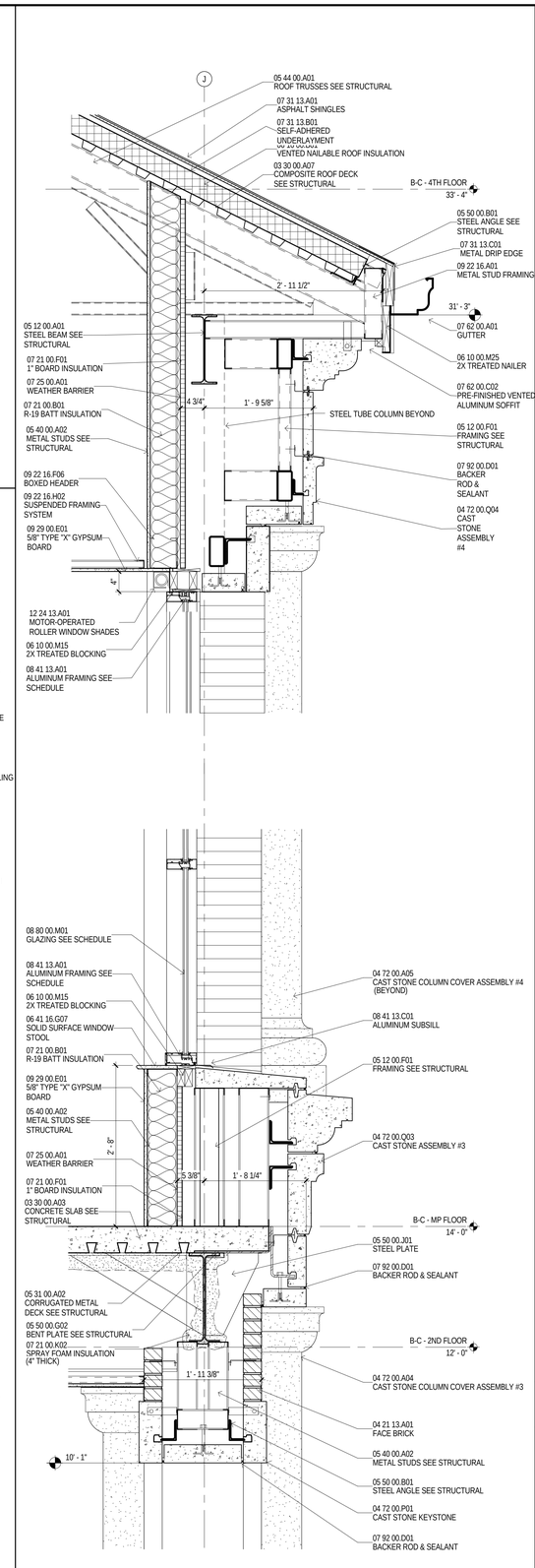

4 — MULTI-PURPOSE WALL SECTION
1" = 1'-0"
A502C

MATERIAL KEYING

03 10 00.A01	VAPOR RETARDER
03 30 00.A03	CONCRETE SLAB SEE STRUCTURAL
03 30 00.A04	FOUNDATION SEE STRUCTURAL
03 30 00.A05	COMPOSITE FLOOR DECK SEE STRUCTURAL
03 30 00.A07	COMPOSITE ROOF DECK SEE STRUCTURAL
03 30 00.J10	GROUT FILL
04 21 13.A01	FACE BRICK
04 21 13.A05	VENT
04 21 13.H01	WALL TIES
04 21 13.K01	WEEP HOLES
04 21 13.L02	MEMBRANE FLASHING
04 21 13.L04	CONTINUOUS COMPRESSIBLE PAD
04 21 13.L05	STAINLESS STEEL DRIP
04 22 00.A01	8" CONCRETE BLOCK SEE STRUCTURAL
04 72 00.A04	CAST STONE COLUMN COVER ASSEMBLY #3
04 72 00.A05	CAST STONE COLUMN COVER ASSEMBLY #4
04 72 00.P01	CAST STONE KEYSTONE
04 72 00.Q03	CAST STONE ASSEMBLY #3
04 72 00.Q04	CAST STONE ASSEMBLY #4
05 12 00.A01	STEEL BEAM SEE STRUCTURAL
05 12 00.B01	TUBE COLUMN SEE STRUCTURAL
05 12 00.F01	FRAMING SEE STRUCTURAL
05 31 00.A02	CORRUGATED METAL DECK SEE STRUCTURAL
05 40 00.A02	METAL STUDS SEE STRUCTURAL
05 44 00.A01	ROOF TRUSSES SEE STRUCTURAL
05 50 00.B01	STEEL ANGLE SEE STRUCTURAL
05 50 00.G01	1 1/4" THICK SHIM PLATE AT 24" O.C. SEE STRUCTURAL
05 50 00.G02	BENT PLATE SEE STRUCTURAL
05 50 00.J01	STEEL PLATE
05 51 13.C01	METAL PAN STAIR
06 10 00.M15	2X TREATED BLOCKING
06 10 00.M25	2X TREATED NAILER
06 16 00.A04	5/8" EXTERIOR GYPSUM SHEATHING
06 16 00.B01	VENTED NAILABLE ROOF INSULATION
06 16 00.D01	PLYWOOD SHEATHING
06 41 16.G07	SOLID SURFACE WINDOW STOOL
07 21 00.B01	R-19 BATT INSULATION
07 21 00.C01	BATT INSULATION
07 21 00.F01	1" BOARD INSULATION
07 21 00.K01	FOAM INSULATION
07 21 00.K02	SPRAY FOAM INSULATION
07 24 19.A04	EIFS FINISH
07 24 19.A05	EIFS FINISH ON CONCRETE
07 25 00.A01	WEATHER BARRIER
07 31 13.A01	ASPHALT SHINGLES
07 31 13.B01	SELF-ADHERED UNDERLAYMENT
07 31 13.C01	METAL DRIP EDGE
07 52 16.B01	FLASHING
07 52 16.B02	TERMINATION BAR
07 52 16.D01	TAPERED RIGID INSULATION
07 52 16.D03	FIBER CANT
07 62 00.A01	GUTTER
07 62 00.C02	PRE-FINISHED VENTED ALUMINUM SOFFIT
07 62 00.C04	PREMANUFACTURED ALUMINUM TRIM PROFILE #1
07 62 00.C05	PREMANUFACTURED ALUMINUM TRIM PROFILE #2
07 62 00.C06	PREMANUFACTURED ALUMINUM TRIM PROFILE #3
07 92 00.D01	BACKER ROD & SEALANT
07 92 00.H01	SEALANT
07 95 00.A05	EXPANSION JOINT COVER (EJ-5)
07 95 00.A09	EXPANSION JOINT COVER (EJ-9)
08 41 13.A01	ALUMINUM FRAMING SEE SCHEDULE
08 41 13.C01	ALUMINUM SUBSILL
08 41 13.C02	MATCHING ALUM. PROFILE
08 80 00.M01	GLAZING SEE SCHEDULE
09 22 16.A01	METAL STUD FRAMING
09 22 16.F06	BOXED HEADER
09 22 16.F10	6" METAL STUDS @ 16" O.C.
09 22 16.H02	SUSPENDED FRAMING SYSTEM
09 29 00.E01	5/8" TYPE "X" GYPSUM BOARD
09 29 00.M02	METAL CORNER BEAD (TYP)
09 51 13.A01	ACOUSTICAL LAY-IN CEILING
12 24 13.A01	MOTOR-OPERATED ROLLER WINDOW SHADES
31 23 18.A01	COMPACTED SUBGRADE
31 23 18.B01	GRANULAR FILL
32 16 13.J08	1/2" PRE-MOLDED E.J. FILLER & SEALANT

GENERAL NOTES

A PERIMETER ENVELOPE SHALL INCLUDE A "AIR BARRIER" BY SEALING THE EXTERIOR WALL ASSEMBLY TIGHT TO STRUCTURAL DECK AROUND THE ENTIRE BUILDING PERIMETER. REFER TO SPECIFICATIONS FOR MATERIALS AND ACCESSORIES NEEDED TO ACHIEVE A CONTINUOUSLY SEALED BARRIER.

B SEE SHEET A517 FOR COMPLETE DETAILS OF FACTORY-FORMED METAL TRIM, GFRC AND CAST STONE PROFILES.

C CONFIRM ALL WINDOW AND DOOR OPENING SIZES WITH MANUFACTURER.

D CONFIRM BLOCKING AND ATTACHMENT OF FACTORY-FORMED METAL TRIM, GFRC AND CAST STONE PROFILES WITH RESPECTIVE MANUFACTURERS.

E ALL EXPOSED STEEL ANGLE LINTELS TO BE FIELD PAINTED.

F UNDERSIDE OF ALL METAL FLOOR DECK AND ADJACENT STEEL STRUCTURE IN EXTERIOR SPACES WITH INTERIOR SPACE ABOVE SHALL HAVE SPRAY FOAM INSULATION APPLIED PER SPECIFICATIONS.

G EXTEND FLASHING THROUGH VENEER, ACROSS AIR SPACE BEHIND VENEER, UP AND BEHIND FACE OF CONTINUOUS INSULATION AT LEAST 8 INCHES; WITH UPPER EDGE TUCKED UNDER BUILDING WRAP, LAPPING AT LEAST 4 INCHES.

REGISTERED ARCHITECT
Thomas Bruce Saunders
3687
Tupelo, MS
STATE OF MISSISSIPPI
04 MARCH 2013

THE McCARTY COMPANY
DESIGN GROUP, P.A.
TELEPHONE: (662) 844-4400
FAX: (662) 844-0520
OFFICE ADDRESS: 533 WEST MAIN STREET TUPELO, MS 38804
MAILING ADDRESS: P.O. BOX 440 TUPELO, MS 38802

DESIGN ARCHITECT:
Hanbury Evans Wright Vlattas + Company
120 Atlantic Street
Norfolk, VA 23510
757.321.9600
www.hewv.com

PROJECT TITLE
USM - CENTURY PARK SOUTH
IHL# 208-297
HATTIESBURG, MISSISSIPPI

THE UNIVERSITY OF SOUTHERN MISSISSIPPI

PROJECT NO: 2012020
DRAWN BY: MPS
CHECKED BY: JPH
DATE ISSUED: 04 MAR 2013

REVISIONS & ADDENDUMS

SHEET TITLE
WALL SECTIONS AND DETAILS

SHEET NUMBER
A516

3/11/2013 5:39:21 AM

Plot Date: BID DOCUMENTS - 04 MAR 2013

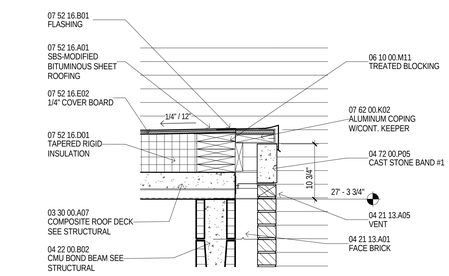

3 — ROOF EDGE DETAIL
1" = 1'-0"
A517

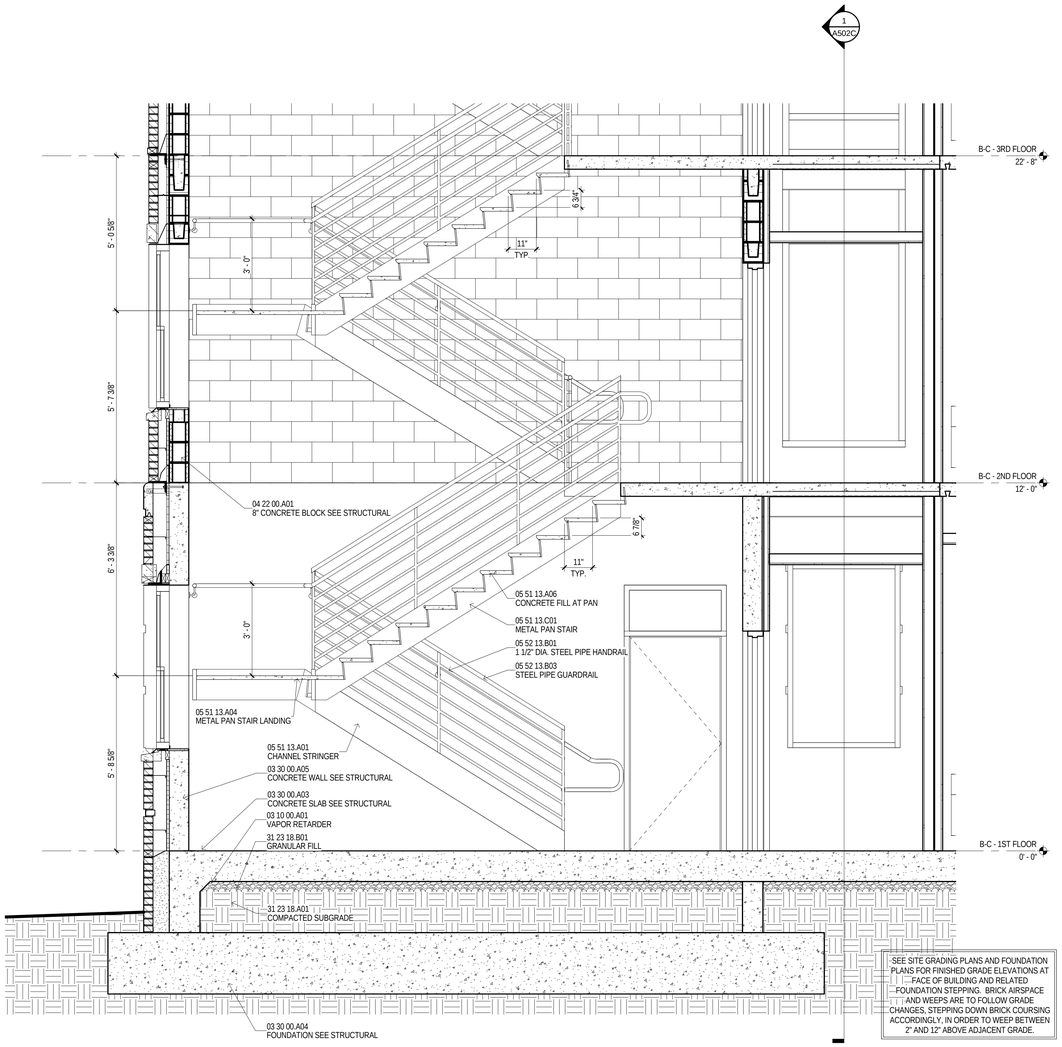

1 — BUILDING C - NORTH STAIR SECTION
1/2" = 1'-0"
A101C

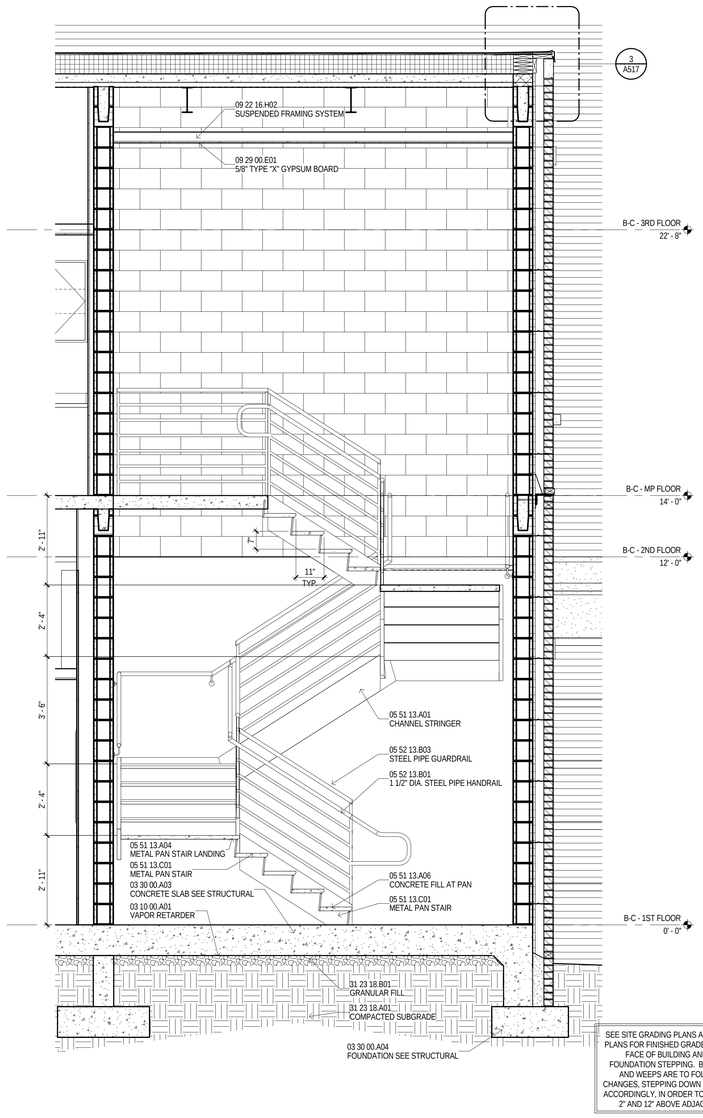

2 — BUILDING C - EAST STAIR SECTION
1/2" = 1'-0"
A101C

MATERIAL KEYING

03 10 00.A01	VAPOR RETARDER
03 30 00.A03	CONCRETE SLAB SEE STRUCTURAL
03 30 00.A04	FOUNDATION SEE STRUCTURAL
03 30 00.A05	CONCRETE WALL SEE STRUCTURAL
03 30 00.A07	COMPOSITE ROOF DECK SEE STRUCTURAL
04 21 13.A01	FACE BRICK
04 21 13.A05	VENT
04 22 00.A01	8" CONCRETE BLOCK SEE STRUCTURAL
04 22 00.B02	CMU BOND BEAM SEE STRUCTURAL
04 72 00.P05	CAST STONE BAND #1
05 51 13.A01	CHANNEL STRINGER
05 51 13.A04	METAL PAN STAIR LANDING
05 51 13.A06	CONCRETE FILL AT PAN
05 51 13.C01	METAL PAN STAIR
05 52 13.B01	1 1/2" DIA. STEEL PIPE HANDRAIL
05 52 13.B03	STEEL PIPE GUARDRAIL
06 10 00.M11	TREATED BLOCKING
07 52 16.A01	SBS-MODIFIED BITUMINOUS SHEET ROOFING
07 52 16.B01	FLASHING
07 52 16.D01	TAPERED RIGID INSULATION
07 52 16.E02	1/4" COVER BOARD
07 62 00.K02	ALUMINUM COPING W/CONT. KEEPER
09 22 16.H02	SUSPENDED FRAMING SYSTEM
09 29 00.E01	5/8" TYPE "X" GYPSUM BOARD
31 23 18.A01	COMPACTED SUBGRADE
31 23 18.B01	GRANULAR FILL

GENERAL NOTES

A PERIMETER ENVELOPE SHALL INCLUDE A "AIR BARRIER" BY SEALING THE EXTERIOR WALL ASSEMBLY TIGHT TO STRUCTURAL DECK AROUND THE ENTIRE BUILDING PERIMETER. REFER TO SPECIFICATIONS FOR MATERIALS AND ACCESSORIES NEEDED TO ACHIEVE A CONTINUOUSLY SEALED BARRIER.

B SEE SHEET A517 FOR COMPLETE DETAILS OF FACTORY-FORMED METAL TRIM, GFRC AND CAST STONE PROFILES.

C CONFIRM ALL WINDOW AND DOOR OPENING SIZES WITH MANUFACTURER.

D CONFIRM BLOCKING AND ATTACHMENT OF FACTORY-FORMED METAL TRIM, GFRC AND CAST STONE PROFILES WITH RESPECTIVE MANUFACTURERS.

E ALL EXPOSED STEEL ANGLE LINTELS TO BE FIELD PAINTED.

F UNDERSIDE OF ALL METAL FLOOR DECK AND ADJACENT STEEL STRUCTURE IN EXTERIOR SPACES WITH INTERIOR SPACE ABOVE SHALL HAVE SPRAY FOAM INSULATION APPLIED PER SPECIFICATIONS.

G EXTEND FLASHING THROUGH VENEER, ACROSS AIR SPACE BEHIND VENEER, UP AND BEHIND FACE OF CONTINUOUS INSULATION AT LEAST 8 INCHES; WITH UPPER EDGE TUCKED UNDER BUILDING WRAP, LAPPING AT LEAST 4 INCHES.

REGISTERED ARCHITECT
Thomas Mc Saunders
3663
Tupelo, MS
STATE OF MISSISSIPPI
04 MARCH 2013

THE McCARTY COMPANY
DESIGN GROUP, P.A.
OFFICE ADDRESS:
533 WEST MAIN STREET
TUPELO, MS 38804
MAILING ADDRESS:
P.O. BOX 440
TUPELO, MS 38802
TELEPHONE:
(662) 844-4400
FAX:
(662) 844-0520

DESIGN ARCHITECT
Hanbury Evans Wright Vlattas + Company
120 Atlantic Street
Norfolk, VA 23510
757.321.9600
www.hewv.com

PROJECT TITLE
USM - CENTURY PARK SOUTH
IHL# 208-297
HATTIESBURG, MISSISSIPPI

THE UNIVERSITY OF SOUTHERN MISSISSIPPI

PROJECT NO: 2012020
DRAWN BY: MPS
CHECKED BY: JPH
DATE ISSUED: 04 MAR 2013

REVISIONS & ADDENDUMS

SHEET TITLE
WALL SECTIONS AND DETAILS

SHEET NUMBER
A517

3/11/2013 5:39:54 AM

Plot Date: BID DOCUMENTS - 04 MAR 2013

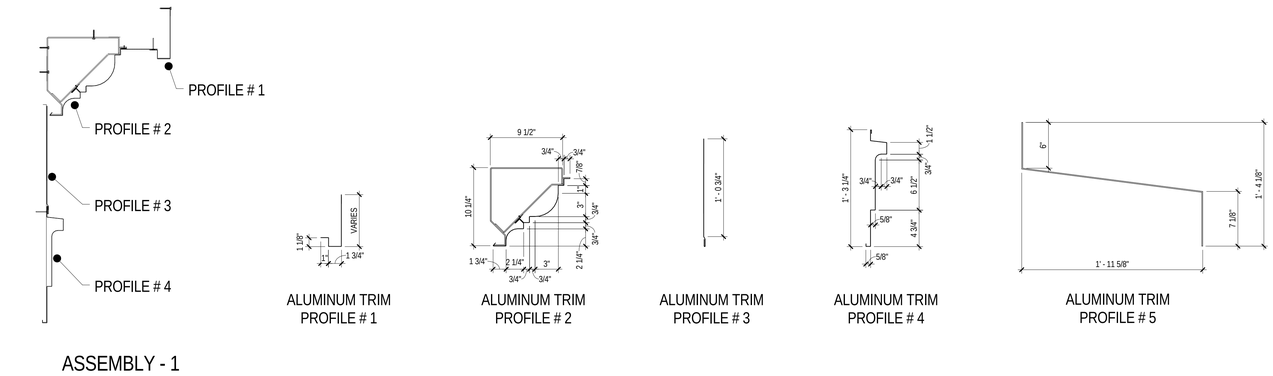

ASSEMBLY - 1

1 — 1 1/2" = 1'-0"

PREMANUFACTURED ALUMINUM TRIM PROFILES

REFER TO 076200 IN THE SPECIFICATIONS FOR PRODUCT DETAILS

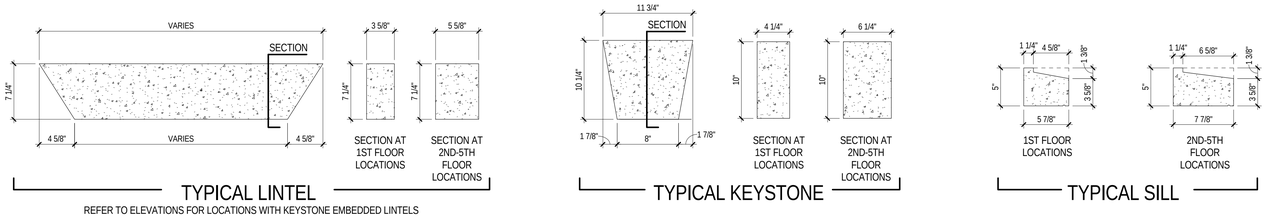

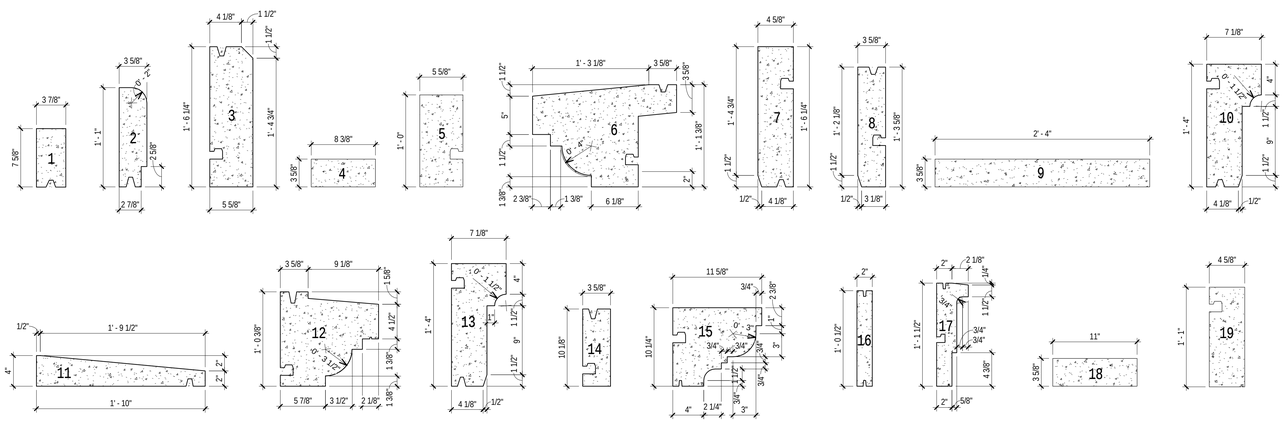

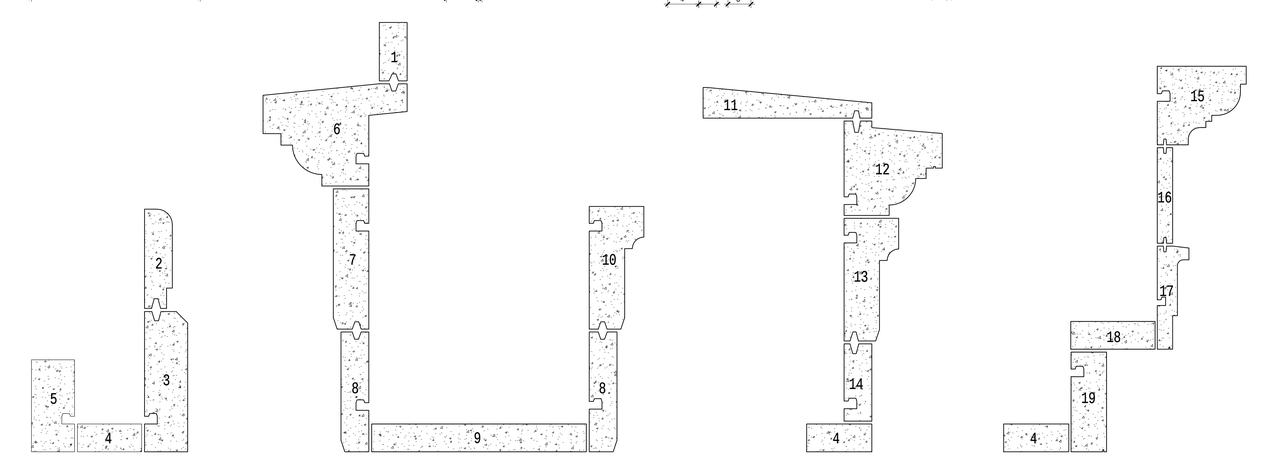

ASSEMBLY - 1 ASSEMBLY - 2 ASSEMBLY - 3 ASSEMBLY - 4

3 — 1 1/2" = 1'-0"

CAST STONE PROFILES

REFER TO 047200 IN THE SPECIFICATIONS FOR PRODUCT DETAILS

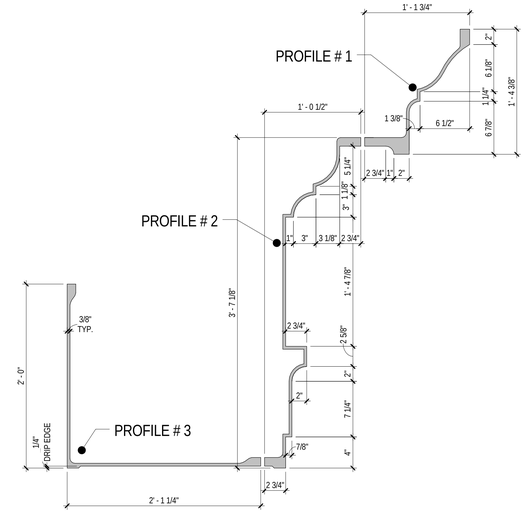

2 — 1 1/2" = 1'-0"

GFRC PROFILES

REFER TO 034900 IN THE SPECIFICATIONS FOR PRODUCT DETAILS

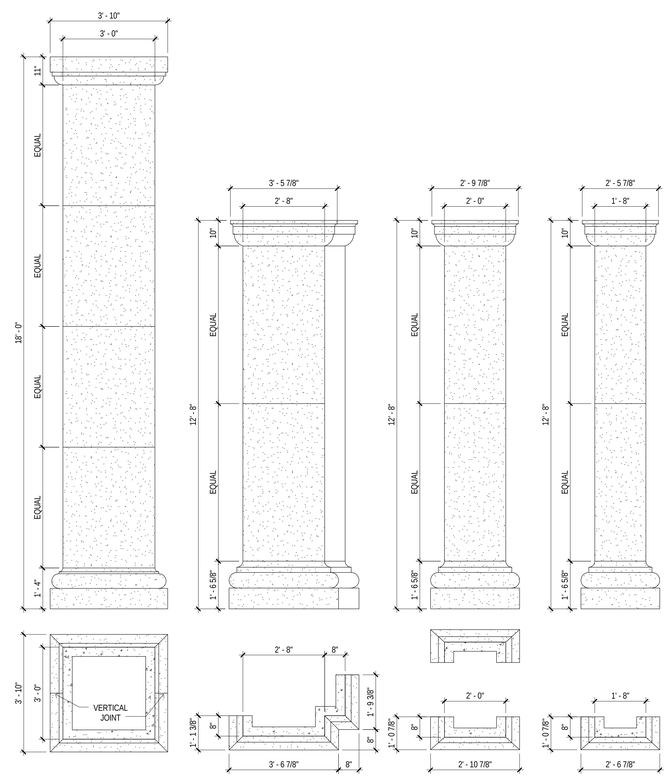

ASSEMBLY - 1 ASSEMBLY - 2 ASSEMBLY - 3 ASSEMBLY - 4

4 — 1/2" = 1'-0"

CAST STONE COLUMN & PILASTER PROFILES

REFER TO 047200 IN THE SPECIFICATIONS FOR PRODUCT DETAILS

THE McCARTY COMPANY
DESIGN GROUP, P.A.
TELEPHONE: (662) 844-4400
FAX: (662) 844-0500
OFFICE ADDRESS: 533 WEST MAIN STREET TUPELO, MS 38804
MAILING ADDRESS: P.O. BOX 440 TUPELO, MS 38802

DESIGN ARCHITECT
Hanbury Evans Wright Vlattas + Company
120 Atlantic Street
Norfolk, VA 23510
757.321.9600
www.hewv.com

PROJECT TITLE
USM - CENTURY PARK SOUTH
IHL# 208-297
HATTIESBURG, MISSISSIPPI

THE UNIVERSITY OF SOUTHERN MISSISSIPPI

PROJECT NO: 2012020
DRAWN BY: MPS
CHECKED BY: JPH
DATE ISSUED: 04 MAR 2013

REVISIONS & ADDENDUMS

SHEET TITLE
ARCHITECTURAL PROFILES

SHEET NUMBER
A518

3/11/2013 5:40:11 AM

Plot Date: BID DOCUMENTS - 04 MAR 2013

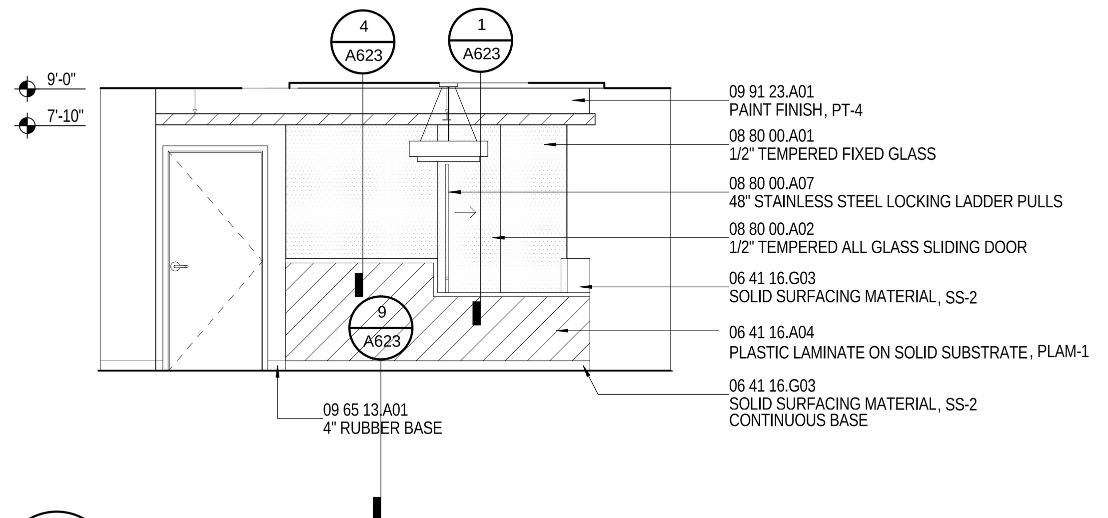

1 BUILDING A - A131 DESK - EAST
1/4" = 1'-0" A310

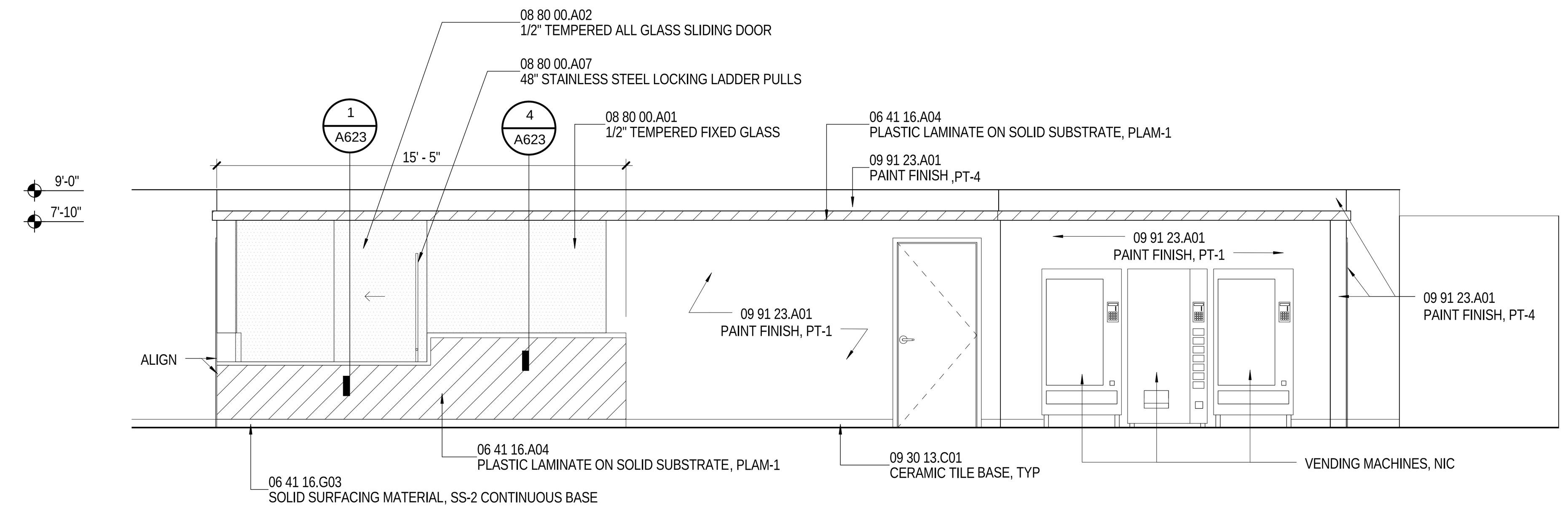

2 BUILDING A - A131 DESK - NORTH
1/4" = 1'-0" A310

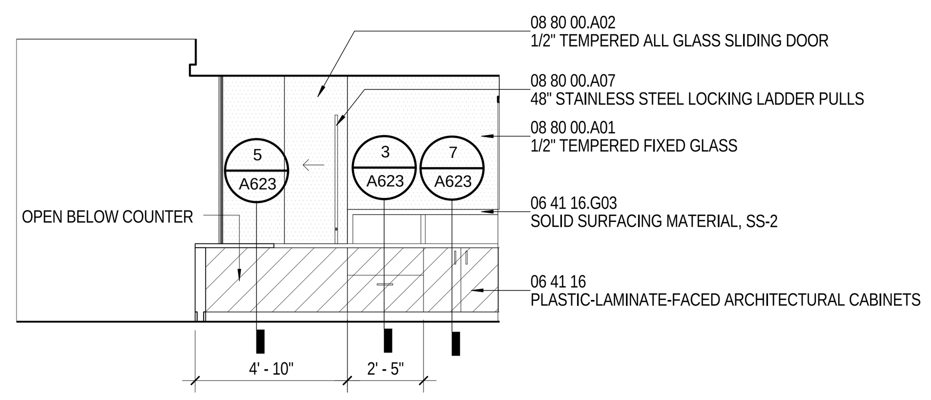

3 BUILDING A - A131 DESK - WEST
1/4" = 1'-0" A310

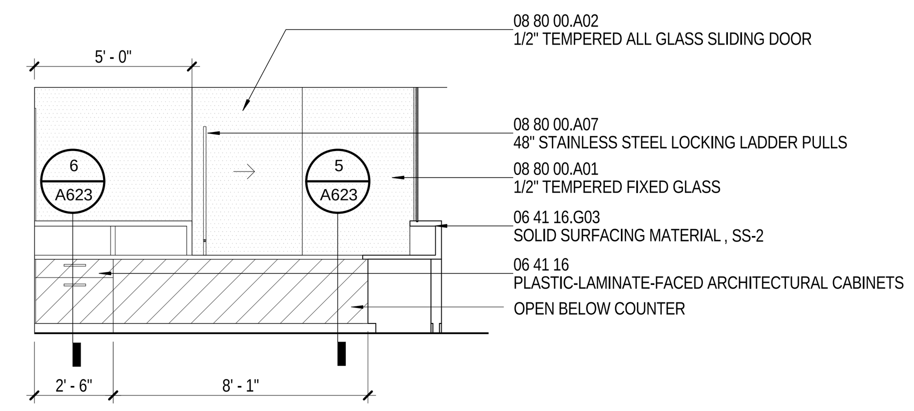

4 BUILDING A - A131 DESK - SOUTH
1/4" = 1'-0" A310

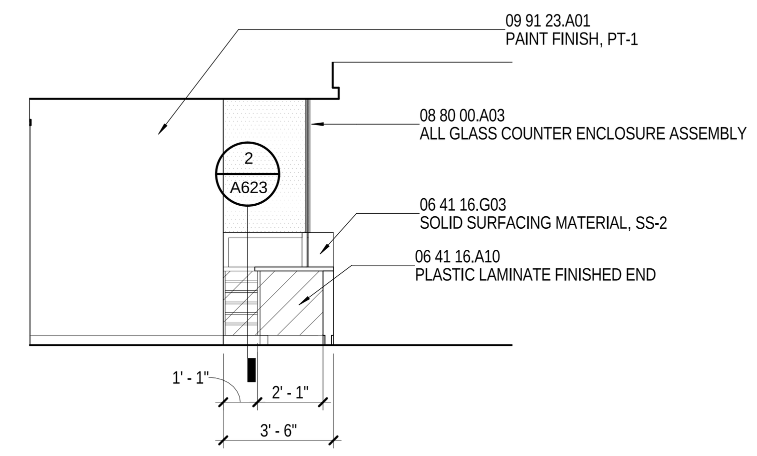

5 BUILDING A - A131 DESK - EAST - 2
1/4" = 1'-0" A310

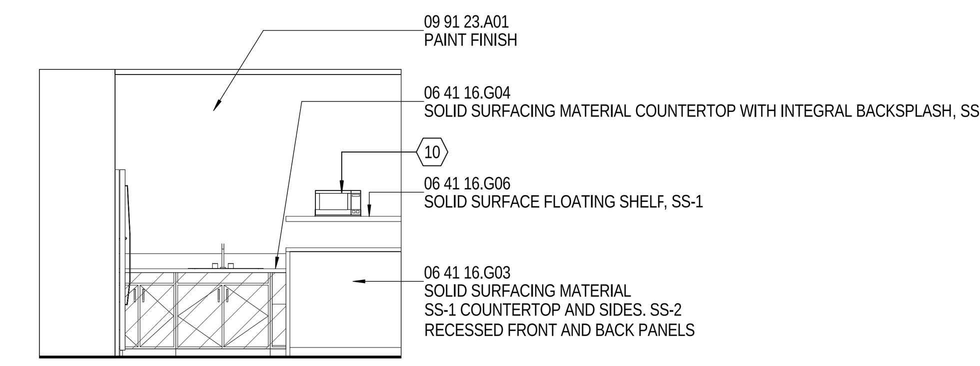

6 BUILDING A - A108 KITCHEN/LOUNGE - EAST
1/4" = 1'-0" A310

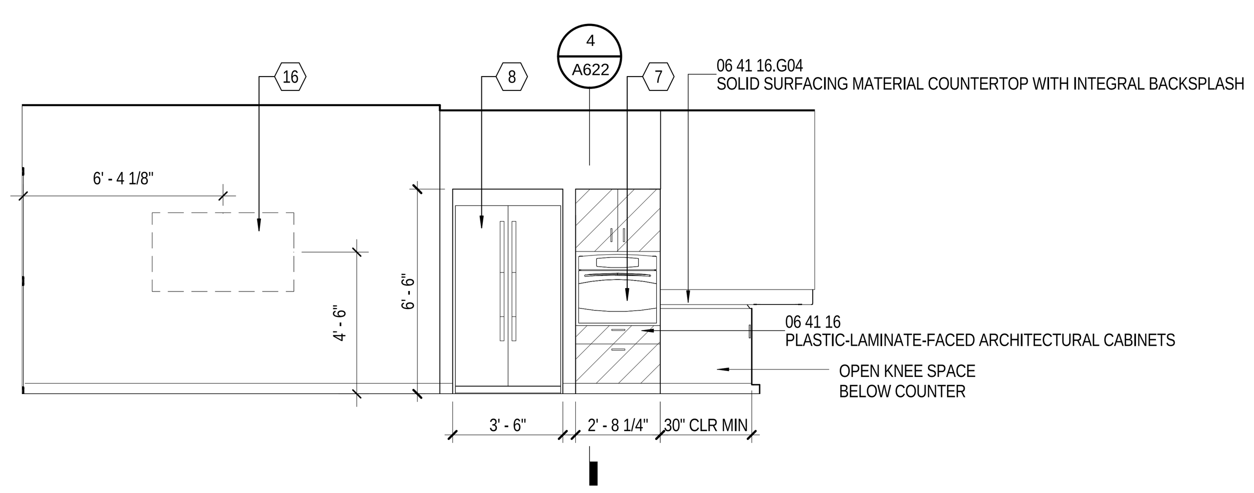

7 BUILDING A - A108 KITCHEN/LOUNGE - NORTH
1/4" = 1'-0" A310

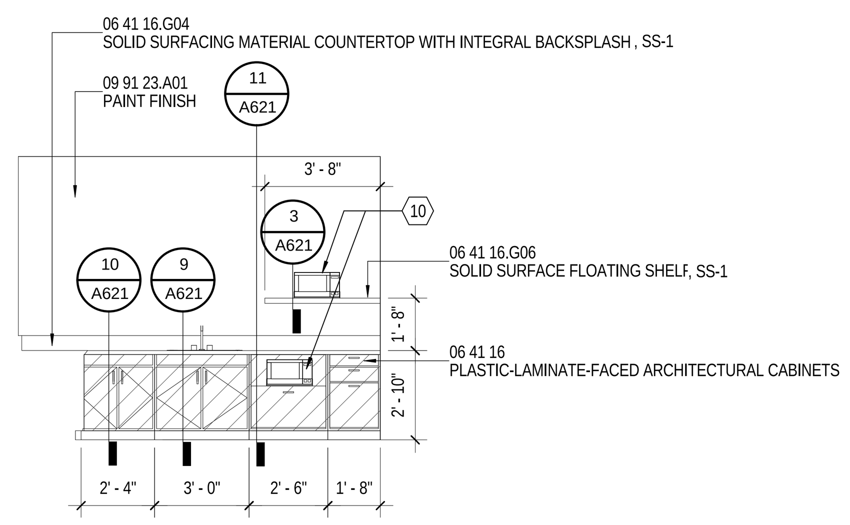

8 BUILDING A - A108 KITCHEN/LOUNGE - EAST - 2
1/4" = 1'-0" A310

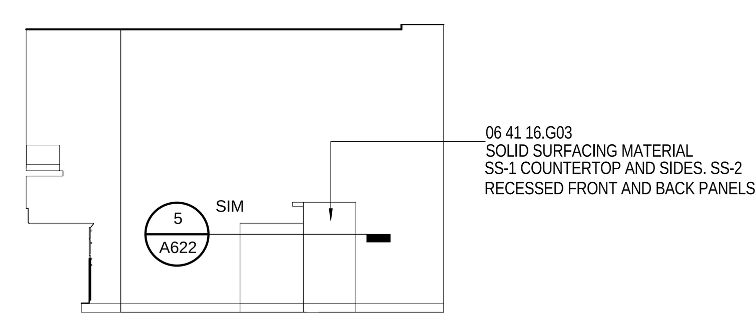

9 BUILDING A - A108 KITCHEN/LOUNGE - SOUTH
1/4" = 1'-0" A310

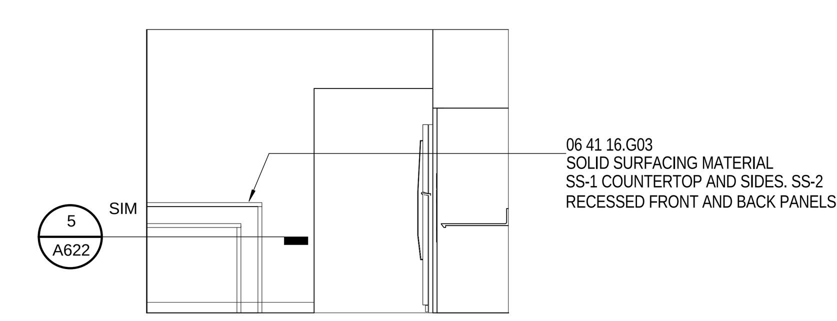

10 BUILDING A - A108 KITCHEN/LOUNGE - WEST
1/4" = 1'-0" A310

MATERIAL KEYING

06 41 16	PLASTIC-LAMINATE-FACED ARCHITECTURAL CABINETS
06 41 16.A04	PLASTIC LAMINATE ON SOLID SUBSTRATE
06 41 16.A10	PLASTIC LAMINATE FINISHED END
06 41 16.G03	SOLID SURFACING MATERIAL
06 41 16.G04	SOLID SURFACING MATERIAL COUNTERTOP WITH INTEGRAL BACKSPLASH
06 41 16.G06	SOLID SURFACE FLOATING SHELF
08 80 00.A01	1/2" TEMPERED FIXED GLASS
08 80 00.A02	1/2" TEMPERED ALL GLASS SLIDING DOOR
08 80 00.A03	ALL GLASS COUNTER ENCLOSURE ASSEMBLY
08 80 00.A07	48" STAINLESS STEEL LOCKING LADDER PULLS
09 30 13.C01	CERAMIC TILE
09 65 13.A01	4" RUBBER BASE
09 91 23.A01	PAINT FINISH

NEW WORK NOTES ENLARGED PLANS AND INTERIOR ELEVATIONS

NEW WORK NOTES

1 STACKED WASHER/DRYER UNIT (W/D) NOT IN CONTRACT
2 FREESTANDING WASHER (W) NOT IN CONTRACT
3 FREESTANDING DRYER (D) NOT IN CONTRACT
4 STACKED DRYERS (S/D) NOT IN CONTRACT
5 FREESTANDING RANGE, OWNER FURNISHED AND INSTALLED
6 DISHWASHER, OWNER FURNISHED AND INSTALLED
7 WALL OVEN - CONTRACTOR FURNISHED AND INSTALLED
8 REFRIGERATOR - OWNER FURNISHED AND INSTALLED
9 DOUBLE SINK - SEE PLUMBING DRAWINGS
10 MICROWAVE OVEN - OWNER FURNISHED AND INSTALLED
11 KITCHEN EXHAUST HOOD WITH FIRE EXTINGUISHING SYSTEM (APARTMENTS) - CONTRACTOR FURNISHED AND INSTALLED
12 DROP–IN RANGE, OWNER FURNISHED AND INSTALLED
13 PROVIDE METAL BLOCKING IN WALL FOR FUTURE GRAB BAR INSTALLATION – TYPICAL ALL TYPE B DWELLING UNITS
14 TRANSFER TYPE SHOWER ENCLOSURE – TYPICAL ALL HC-T UNITS
15 ROLL-IN TYPE SHOWER ENCLOSURE – TYPICAL ALL HC-R UNITS
16 WALL MOUNTED TV - NOT IN CONTRACT. CONTRACTOR TO PROVIDE 12 GA METAL WALL BLOCKING- COORDINATE WITH OWNER. SEE ELECTRICAL FOR POWER AND DATA OUTLETS
17 GARBAGE DISPOSAL - SEE PLUMBING DRAWINGS
18 TRANSFER TYPE TUB - SEE PLUMBING DRAWINGS

GENERAL NOTES ENLARGED PLANS AND INTERIOR ELEVATIONS

GENERAL NOTES

A UNLESS SPECIFICALLY NOTED OTHERWISE - INTERIOR DIMENSIONS ARE TO FACE OF STUD, FACE OF CMU OR FACE OF CONCRETE WHERE INDICATED. WHERE FACE OF FINISH OR CLEAR DIMENSIONS ARE INDICATED FOR COORDINATION PURPOSES OR TO DESIGNATE REQUIRED CODE CLEARANCES, THE DIMENSION IS TYPICALLY DESIGNATED AS "FOF" (FACE OF FINISH) OR "CLR" (CLEAR).

B CONTRACTOR RESPONSIBLE FOR FIELD MEASUREMENTS ON OVERALL DIMENSIONS.

C ROUGH-IN AND CLEARANCE DIMENSIONS, BLOCKING AND ANCHORAGE FOR SHOWER UNITS, (AS WELL AS LAUNDRY EQUIPMENT, APPLIANCES, AND SIMILAR BUILT-IN OR DIMENSIONALLY CRITICAL ITEMS) IS TO BE PROVIDED PER THE MANUFACTURER'S WRITTEN INSTALLATION INSTRUCTIONS.

D DIMENSIONS INDICATED AT SHOWER FIXTURES ARE TO FACE OF FINSH AND ARE APPROXIMATE +/-. PRIOR TO BEGINNING PARTITION LAYOUT WORK OBTAIN ACTUAL SAMPLES OF EACH PREFABRICATED SHOWER ENCLOSURE AND CONSTRUCT MOCK-UPS OF EACH TYPICAL CONDITION TO ESTABLISH EXACT ROUGH-IN DIMENSIONS AND FRAMING, BLOCKING AND FINISH DETAILS.

E SHOWER UNITS SHALL BE GROUTED SOLID UNDERNEATH - FILL VOID BETWEEN FLOOR SLAB AND FLOOR OF SHOWER.

F DWELLING UNITS DESIGNATED AS "HC" ON THE PLANS ARE UNITS WITH MOBILITY FEATURES IN ACCORDANCE WITH APPLICABLE ACCESSIBILITY CODES. ROOMS NOTED "HC-R" ARE PROVIDED WITH ROLL-IN TYPE SHOWER ENCLOSURESS. ROOMS NOTED AS "HC-T" ARE PROVIDED WITH TRANSFER TYPE SHOWER ENCLOSURES. UNITS DESIGNATED WITH "C" ARE UNITS TO BE PROVIDED WITH COMMUNICATIONS FEATURES.

G ALL DWELLING UNITS NOT DESIGNATED AS "HC" ARE TO BE CONSTRUCTED AS "TYPE B" UNITS PER CHAPTER 11 OF ICC AND APPLICABLE PROVISIONS OF ICC/ANSI A117.1 AND THE FAIR HOUSING ACT DESIGN MANUAL.

H EXCEPT AS NOTED OTHERWISE, LAUNDRY EQUIPMENT AND RESIDENTIAL APPLIANCES ARE NOT IN CONTRACT (NIC) - LAUNDRY EQUIPMENT WILL BE FURNISHED AND INSTALLED BY THE OWNER'S SEPARATE LAUNDRY CONTRACTOR (WITH THE EXCEPTION OF STAFF APARTMENT LAUNDRY EQUIPMENT). RESIDENTIAL KITCHEN EQUIPMENT (WITH THE EXCEPTION OF WALL OVENS AND RANGE HOODS) WILL BE OWNER FURNISHED AND INSTALLED. PROVIDE ROUGH-IN FOR LAUNDRY EQUIPMENT AND RESIDENTIAL KITCHEN APPLIANCES. REFER TO ELECTRICAL DRAWINGS FOR POWER AND DATA - REFER TO PLUMBING DRAWINGS FOR GAS, WATER AND DRAINAGE - REFER TO MECHANICAL DRAWING FOR EXHAUSTING AS APPLICABLE. COORDINATE ROUGH-IN REQUIREMENTS WITH THE OWNER AND OBTAIN MANUFACTURER'S

I LOCATE WHEELCHAIR ACCESSIBLE WATER CLOSETS 17" FROM CENTERLINE OF WATER CLOSET TO FACE OF FINISH AT ADJACENT WALL, TYPICAL. FLUSH HANDLES TO BE LOCATED ON THE WIDE (OPEN) SIDE OF THE FIXTURE, TYPICAL.

J PROVIDE FLOOR DRAINS (FD) AT ROLL-IN (R) AND TRANSFER (T) SHOWERS. REFER TO PLUMBING DRAWINGS, SLOPE FLOORS TO DRAIN.

K WHERE NOTED AT HANDICAP ACCESSIBLE DWELLING UNITS, PROVIDE REMOVABLE BASE CABINETS AT KITCHEN AND BATHROOM SINKS COMPLYING WITH THE REQUIREMENTS OF ADA STANDARDS FOR ACCESSIBLE DESIGN (SECTION 606.2 EXCEPTION NO. 3).

L CONTRACTOR TO PROVIDE 12 GAGE METAL BLOCKING IN STUD WALLS FOR ANCHORAGE OF WALL MOUNTED ITEMS INCLUDING BUT NOT LIMITED TO TOILET ACCESSORIES, WALL CABINETS, WALL MOUNTED TV'S, SHELVING, TOILET PARTITIONS, OWNER FURNISHED EQUIPMENT INDICATED AND SIMILAR ITEMS. FOR "TYPE B" DWELLING UNITS, PROVIDE METAL BLOCKING IN WALLS FOR FUTURE INSTALLATIONS AS INDICATED. FOR WALL MOUNTED TV'S IN LOUNGES, PROVIDE METAL BLOCKING 24" ABOVE AND BELOW ELECTRICAL JUNCTION BOXES.

M REFER TO A026 FOR DESCRIPTION OF ALL PARTITION TYPES.

N REFER TO A100 (1/8" FLOOR PLANS) SERIES DRAWINGS AND A300 SERIES DRAWINGS (ENLARGED PLANS) FOR PARTITION TYPE LOCATIONS.

O REFER TO LS SERIES DRAWING (LIFE SAFETY PLANS) FOR LOCATIONS OF FIRE RATED WALLS AND PARTITIONS.

P REFER TO A000 SERIES DRAWINGS FOR WINDOW TYPES AND DOOR TYPES, SCHEDULES AND DETAILS.

Q REFER TO A000 SERIES DRAWINGS FOR INTERIOR FINISH SCHEDULES.

R REFER TO A100 SERIES DRAWINGS (ENLARGED PLANS) FOR ADDITIONAL PLAN NOTES.

S REFER TO SPECIFICATIONS SECTION 10 28 00 FOR TOILET ACCESSORY SCHEDULE

REGISTERED ARCHITECT MICHAEL EVANS 4283 STATE OF MISSISSIPPI 04 MAR 2013

THE McCARTY COMPANY
DESIGN GROUP, P.A.
TELEPHONE: (662) 844-4400
FAX: (662) 844-0500
OFFICE ADDRESS: 533 WEST MAIN STREET TUPELO, MS 38804
MAILING ADDRESS: P.O. BOX 440 TUPELO, MS 38802

DESIGN ARCHITECT
Hanbury Evans Wright Vlattas + Company
120 Atlantic Street
Norfolk, VA 23510
757.321.9600
www.hevw.com

PROJECT TITLE
USM - CENTURY PARK SOUTH
IHL# 208-297
HATTIESBURG, MISSISSIPPI

THE UNIVERSITY OF SOUTHERN MISSISSIPPI

PROJECT NO: 2012020
DRAWN BY: SLR
CHECKED BY: JTG
DATE ISSUED: 04 MAR 2013

REVISIONS & ADDENDUMS

SHEET TITLE
BUILDING A - INTERIOR ELEVATIONS - COMMON AREAS

SHEET NUMBER
A601

Plot Date: BID DOCUMENTS - 04 MARCH 2013
3/8/2013 1:34:44 PM

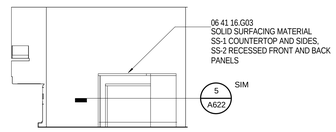

1 — BUILDING A - A203 KITCHEN/LOUNGE - WEST
1/4" = 1'-0" A310
NOTE: O.H. RM 254a & RM 254b

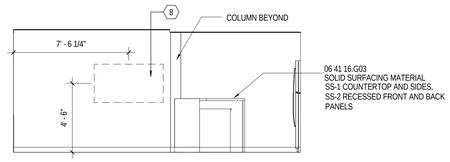

2 — BUILDING A - A203 KITCHEN/LOUNGE - NORTH
1/4" = 1'-0" A310
NOTE: O.H. RM 254a & RM 254b

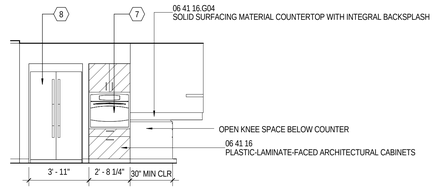

3 — BUILDING A - A203 KITCHEN/LOUNGE - EAST
1/4" = 1'-0" A310
NOTE: O.H. RM 254a & RM 254b

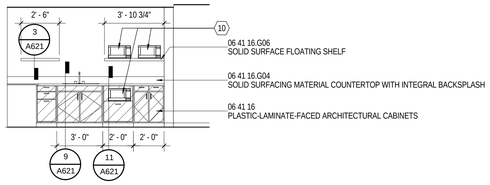

4 — BUILDING A - A203 KITCHEN/LOUNGE - SOUTH
1/4" = 1'-0" A310
NOTE: O.H. RM 254a & RM 254b

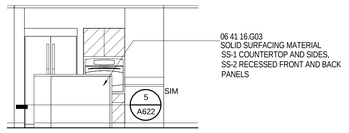

5 — BUILDING A- A203 KITCHEN/LOUNGE - EAST - 2
1/4" = 1'-0" A310
NOTE: O.H. RM 254a & RM 254b

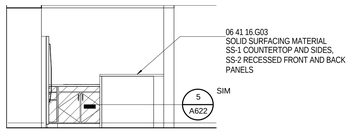

6 — BUILDING A - A203 KITCHEN/LOUNGE - SOUTH - 2
1/4" = 1'-0" A310
NOTE: O.H. RM 254a & RM 254b

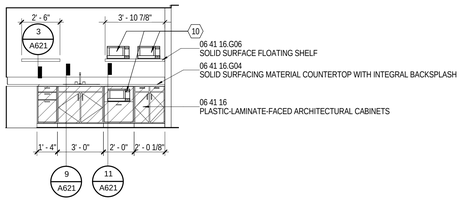

7 — BUILDING A - A322 KITCHEN/LOUNGE - NORTH
1/4" = 1'-0" A310
NOTE: O.H. RM 352a & RM 352b, RM 452a & 452b, RM 552a & 552b

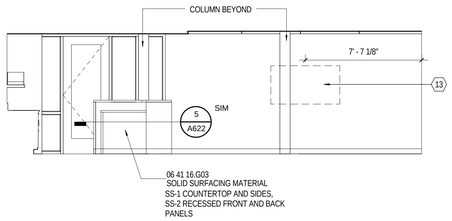

8 — BUILDING A - A322 KITCHEN/LOUNGE - EAST
1/4" = 1'-0" A310
NOTE: O.H. RM 352a & RM 352b, RM 452a & 452b, RM 552a & 552b

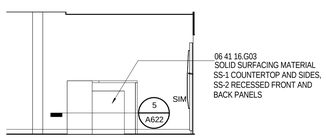

9 — BUILDING A - A322 KITCHEN/LOUNGE - SOUTH
1/4" = 1'-0" A310
NOTE: O.H. RM 352a & RM 352b, RM 452a & 452b, RM 552a & 552b

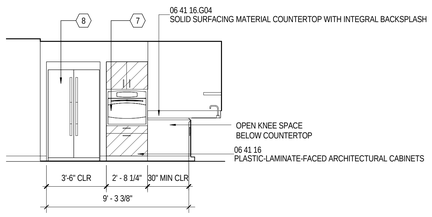

10 — BUILDING A - A322 KITCHEN/LOUNGE - WEST
1/4" = 1'-0" A310
NOTE: O.H. RM 352a & RM 352b, RM 452a & 452b, RM 552a & 552b

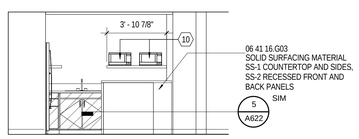

11 — BUILDING A - A322 KITCHEN/LOUNGE - NORTH 2
1/4" = 1'-0" A310
NOTE: O.H. RM 352a & RM 352b, RM 452a & 452b, RM 552a & 552b

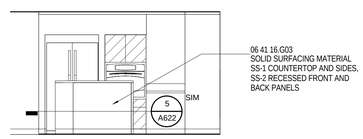

12 — BUILDING A - A322 KITCHEN/LOUNGE - WEST 2
1/4" = 1'-0" A310
NOTE: O.H. RM 352a & RM 352b, RM 452a & 452b, RM 552a & 552b

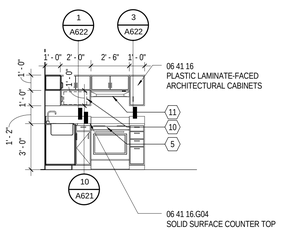

13 — BUILDING A - 1BR STAFF APARTMENT - KITCHEN
1/4" = 1'-0" A101A

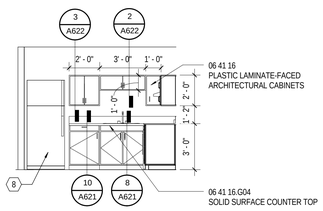

14 — BUILDING A - 1BR STAFF APARTMENT - KITCHEN
1/4" = 1'-0" A101A

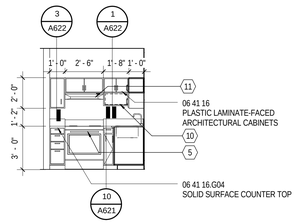

15 — BUILDING A - 2BR STAFF APARTMENT - KITCHEN
1/4" = 1'-0" A101A

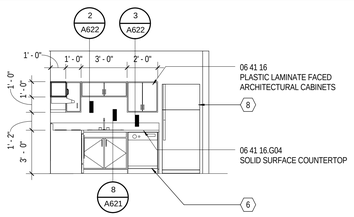

16 — BUILDING A - 2BR STAFF APARTMENT - KITCHEN
1/4" = 1'-0" A101A

MATERIAL KEYING

06 41 16	PLASTIC-LAMINATE-FACED ARCHITECTURAL CABINETS
06 41 16.G03	SOLID SURFACING MATERIAL
06 41 16.G04	SOLID SURFACING MATERIAL COUNTERTOP WITH INTEGRAL BACKSPLASH
06 41 16.G06	SOLID SURFACE FLOATING SHELF

NEW WORK NOTES ENLARGED PLANS AND INTERIOR ELEVATIONS

NEW WORK NOTES

1 STACKED WASHER/DRYER UNIT (W/D) NOT IN CONTRACT
2 FREESTANDING WASHER (W) NOT IN CONTRACT
3 FREESTANDING DRYER (D) NOT IN CONTRACT
4 STACKED DRYERS (S/D) NOT IN CONTRACT
5 FREESTANDING RANGE, OWNER FURNISHED AND INSTALLED
6 DISHWASHER, OWNER FURNISHED AND INSTALLED
7 WALL OVEN - CONTRACTOR FURNISHED AND INSTALLED
8 REFRIGERATOR - OWNER FURNISHED AND INSTALLED
9 DOUBLE SINK - SEE PLUMBING DRAWINGS
10 MICROWAVE OVEN - OWNER FURNISHED AND INSTALLED
11 KITCHEN EXHAUST HOOD WITH FIRE EXTINGUISHING SYSTEM (APARTMENTS) - CONTRACTOR FURNISHED AND INSTALLED
12 DROP–IN RANGE, OWNER FURNISHED AND INSTALLED
13 PROVIDE METAL BLOCKING IN WALL FOR FUTURE GRAB BAR INSTALLATION – TYPICAL ALL TYPE B DWELLING UNITS
14 TRANSFER TYPE SHOWER ENCLOSURE – TYPICAL ALL HC-T UNITS
15 ROLL-IN TYPE SHOWER ENCLOSURE – TYPICAL ALL HC-R UNITS
16 WALL MOUNTED TV - NOT IN CONTRACT. CONTRACTOR TO PROVIDE 12 GA METAL WALL BLOCKING- COORDINATE WITH OWNER. SEE ELECTRICAL FOR POWER AND DATA OUTLETS
17 GARBAGE DISPOSAL - SEE PLUMBING DRAWINGS
18 TRANSFER TYPE TUB - SEE PLUMBING DRAWINGS

GENERAL NOTES ENLARGED PLANS AND INTERIOR ELEVATIONS

GENERAL NOTES

A UNLESS SPECIFICALLY NOTED OTHERWISE - INTERIOR DIMENSIONS ARE TO FACE OF STUD, FACE OF CMU OR FACE OF CONCRETE WHERE INDICATED. WHERE FACE OF FINISH OR CLEAR DIMENSIONS ARE INDICATED FOR COORDINATION PURPOSES OR TO DESIGNATE REQUIRED CODE CLEARANCES, THE DIMENSION IS TYPICALLY DESIGNATED AS "FOF" (FACE OF FINISH) OR "CLR" (CLEAR).

B CONTRACTOR RESPONSIBLE FOR FIELD MEASUREMENTS ON OVERALL DIMENSIONS.

C ROUGH-IN AND CLEARANCE DIMENSIONS, BLOCKING AND ANCHORAGE FOR SHOWER UNITS, (AS WELL AS LAUNDRY EQUIPMENT, APPLIANCES, AND SIMILAR BUILT-IN OR DIMENSIONALLY CRITICAL ITEMS) IS TO BE PROVIDED PER THE MANUFACTURER'S WRITTEN INSTALLATION INSTRUCTIONS.

D DIMENSIONS INDICATED AT SHOWER FIXTURES ARE TO FACE OF FINISH AND ARE APPROXIMATE +/-. PRIOR TO BEGINNING PARTITION LAYOUT WORK OBTAIN ACTUAL SAMPLES OF EACH PREFABRICATED SHOWER ENCLOSURE AND CONSTRUCT MOCK-UPS OF EACH TYPICAL CONDITION TO ESTABLISH EXACT ROUGH-IN DIMENSIONS AND FRAMING, BLOCKING AND FINISH DETAILS.

E SHOWER UNITS SHALL BE GROUTED SOLID UNDERNEATH - FILL VOID BETWEEN FLOOR SLAB AND FLOOR OF SHOWER.

F DWELLING UNITS DESIGNATED AS "HC" ON THE PLANS ARE UNITS WITH MOBILITY FEATURES IN ACCORDANCE WITH APPLICABLE ACCESSIBILITY CODES. ROOMS NOTED "HC-R" ARE PROVIDED WITH ROLL-IN TYPE SHOWER ENCLOSURESS. ROOMS NOTED AS "HC-T" ARE PROVIDED WITH TRANSFER TYPE SHOWER ENCLOSURES. UNITS DESIGNATED WITH "C" ARE UNITS TO BE PROVIDED WITH COMMUNICATIONS FEATURES.

G ALL DWELLING UNITS NOT DESIGNATED AS "HC" ARE TO BE CONSTRUCTED AS "TYPE B" UNITS PER CHAPTER 11 OF ICC AND APPLICABLE PROVISIONS OF ICC/ANSI A117.1 AND THE FAIR HOUSING ACT DESIGN MANUAL.

H EXCEPT AS NOTED OTHERWISE, LAUNDRY EQUIPMENT AND RESIDENTIAL APPLIANCES ARE NOT IN CONTRACT (NIC) - LAUNDRY EQUIPMENT WILL BE FURNISHED AND INSTALLED BY THE OWNER'S SEPARATE LAUNDRY CONTRACTOR (WITH THE EXCEPTION OF STAFF APARTMENT LAUNDRY EQUIPMENT). RESIDENTIAL KITCHEN EQUIPMENT (WITH THE EXCEPTION OF WALL OVENS AND RANGE HOODS) WILL BE OWNER FURNISHED AND INSTALLED. PROVIDE ROUGH-IN FOR LAUNDRY EQUIPMENT AND RESIDENTIAL KITCHEN APPLIANCES. REFER TO ELECTRICAL DRAWINGS FOR POWER AND DATA - REFER TO PLUMBING DRAWINGS FOR GAS, WATER AND DRAINAGE - REFER TO MECHANICAL DRAWING FOR EXHAUSTING AS APPLICABLE. COORDINATE ROUGH-IN REQUIREMENTS WITH THE OWNER AND OBTAIN MANUFACTURER'S

I LOCATE WHEELCHAIR ACCESSIBLE WATER CLOSETS 17" FROM CENTERLINE OF WATER CLOSET TO FACE OF FINISH AT ADJACENT WALL, TYPICAL. FLUSH HANDLES TO BE LOCATED ON THE WIDE (OPEN) SIDE OF THE FIXTURE, TYPICAL.

J PROVIDE FLOOR DRAINS (FD) AT ROLL-IN (R) AND TRANSFER (T) SHOWERS. REFER TO PLUMBING DRAWINGS. SLOPE FLOORS TO DRAIN.

K WHERE NOTED AT HANDICAP ACCESSIBLE DWELLING UNITS, PROVIDE REMOVABLE BASE CABINETS AT KITCHEN AND BATHROOM SINKS COMPLYING WITH THE REQUIREMENTS OF ADA STANDARDS FOR ACCESSIBLE DESIGN (SECTION 606.2 EXCEPTION NO. 3).

L CONTRACTOR TO PROVIDE 12 GAGE METAL BLOCKING IN STUD WALLS FOR ANCHORAGE OF WALL MOUNTED ITEMS INCLUDING BUT NOT LIMITED TO TOILET ACCESSORIES, WALL CABINETS, WALL MOUNTED TV'S, SHELVING, TOILET PARTITIONS, OWNER FURNISHED EQUIPMENT INDICATED AND SIMILAR ITEMS. FOR "TYPE B" DWELLING UNITS, PROVIDE METAL BLOCKING IN WALLS FOR FUTURE INSTALLATIONS AS INDICATED. FOR WALL MOUNTED TV'S IN LOUNGES, PROVIDE METAL BLOCKING 24" ABOVE AND BELOW ELECTRICAL JUNCTION BOXES.

M REFER TO A026 FOR DESCRIPTION OF ALL PARTITION TYPES.

N REFER TO A100 (1/8" FLOOR PLANS) SERIES DRAWINGS AND A300 SERIES DRAWINGS (ENLARGED PLANS) FOR PARTITION TYPE LOCATIONS.

O REFER TO LS SERIES DRAWING (LIFE SAFETY PLANS) FOR LOCATIONS OF FIRE RATED WALLS AND PARTITIONS.

P REFER TO A000 SERIES DRAWINGS FOR WINDOW TYPES AND DOOR TYPES, SCHEDULES AND DETAILS.

Q REFER TO A000 SERIES DRAWINGS FOR INTERIOR FINISH SCHEDULES.

R REFER TO A100 SERIES DRAWINGS (ENLARGED PLANS) FOR ADDITIONAL PLAN NOTES.

S REFER TO SPECIFICATIONS SECTION 10 28 00 FOR TOILET ACCESSORY SCHEDULE

THE McCARTY COMPANY
DESIGN GROUP, P.A.
OFFICE ADDRESS: 533 WEST MAIN STREET TUPELO, MS 38804
TELEPHONE: (662) 844-4403
FAX: (662) 844-0503
MAILING ADDRESS: P.O. BOX 440 TUPELO, MS 38802

DESIGN ARCHITECT
Hanbury Evans Wright Vlattas + Company
120 Atlantic Street
Norfolk, VA 23510
757.321.9600
www.hewv.com

PROJECT TITLE
USM - CENTURY PARK SOUTH
IHL# 208-297
HATTIESBURG, MISSISSIPPI

THE UNIVERSITY OF SOUTHERN MISSISSIPPI

PROJECT NO: 2012020
DRAWN BY: RMC & SLR
CHECKED BY: JTG
DATE ISSUED: 04 MAR 2013

REVISIONS & ADDENDUMS

SHEET TITLE
BUILDING A - INTERIOR ELEVATIONS - COMMON AREAS AND STAFF APTS

SHEET NUMBER
A602

3/4/2013 12:28:24 PM

Plot Date: BID DOCUMENTS - 04 MARCH 2013

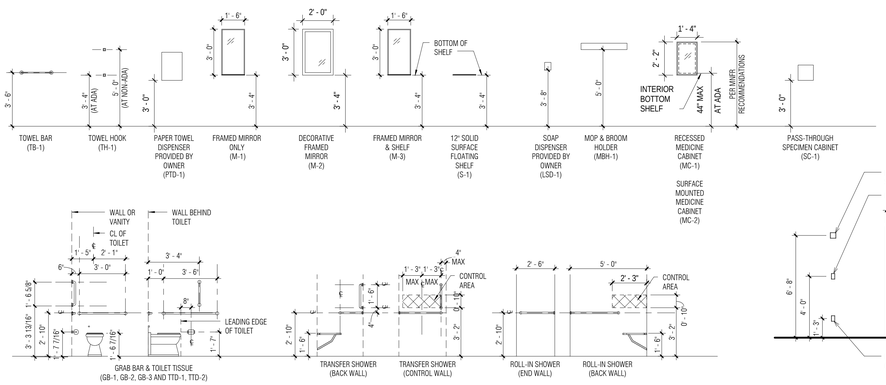

TOILET AND BATH ACCESSORY LEGEND

1/4" = 1'-0"

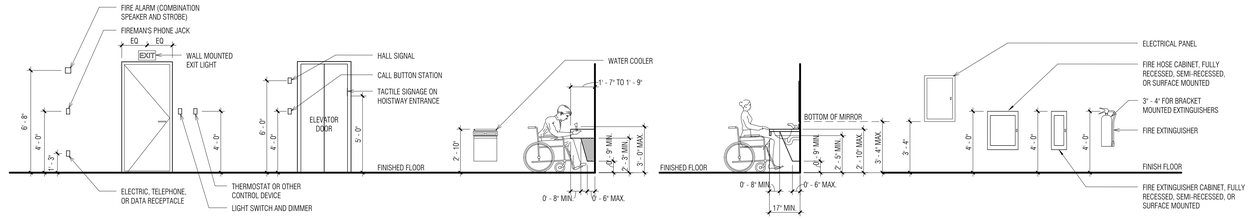

STANDARD MOUNTING HEIGHTS

1/4" = 1'-0"

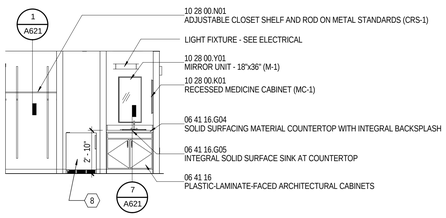

1 1/4" = 1'-0" INTERIOR ELEVATION - STUDENT ROOM
A311

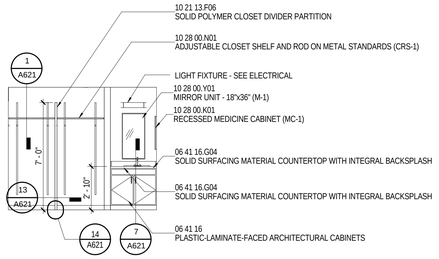

2 1/4" = 1'-0" INTERIOR ELEVATION - STUDENT ROOM
A101A

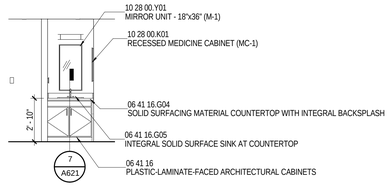

3 1/4" = 1'-0" INTERIOR ELEVATION - STUDENT ROOM
A311

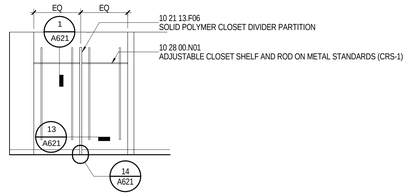

4 1/4" = 1'-0" INTERIOR ELEVATION - STUDENT ROOM
A311

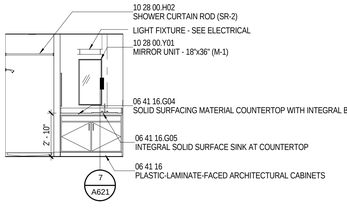

5 1/4" = 1'-0" INTERIOR ELEVATION - 1 BR STAFF APARTMENT
A101A

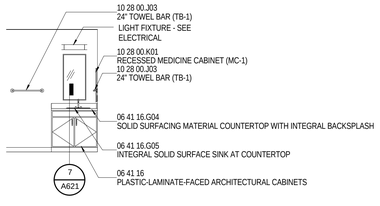

6 1/4" = 1'-0" INTERIOR ELEVATION - 2BR STAFF APARTMENT
A101A

MATERIAL KEYING

06 41 16	PLASTIC-LAMINATE-FACED ARCHITECTURAL CABINETS
06 41 16.G04	SOLID SURFACING MATERIAL COUNTERTOP WITH INTEGRAL BACKSPLASH
06 41 16.G05	INTEGRAL SOLID SURFACE SINK AT COUNTERTOP
10 21 13.F06	SOLID POLYMER CLOSET DIVIDER PARTITION
10 28 00.H02	SHOWER CURTAIN ROD (SR-2)
10 28 00.J03	24" TOWEL BAR (TB-1)
10 28 00.K01	RECESSED MEDICINE CABINET (MC-1)
10 28 00.N01	ADJUSTABLE CLOSET SHELF AND ROD ON METAL STANDARDS (CRS-1)
10 28 00.Y01	MIRROR UNIT - 18"x36" (M-1)

NEW WORK NOTES ENLARGED PLANS AND INTERIOR ELEVATIONS

NEW WORK NOTES

1 STACKED WASHER/DRYER UNIT (W/D) NOT IN CONTRACT
2 FREESTANDING WASHER (W) NOT IN CONTRACT
3 FREESTANDING DRYER (D) NOT IN CONTRACT
4 STACKED DRYERS (S/D) NOT IN CONTRACT
5 FREESTANDING RANGE, OWNER FURNISHED AND INSTALLED
6 DISHWASHER, OWNER FURNISHED AND INSTALLED
7 WALL OVEN - CONTRACTOR FURNISHED AND INSTALLED
8 REFRIGERATOR - OWNER FURNISHED AND INSTALLED
9 DOUBLE SINK - SEE PLUMBING DRAWINGS
10 MICROWAVE OVEN - OWNER FURNISHED AND INSTALLED
11 KITCHEN EXHAUST HOOD WITH FIRE EXTINGUISHING SYSTEM (APARTMENTS) - CONTRACTOR FURNISHED AND INSTALLED
12 DROP–IN RANGE, OWNER FURNISHED AND INSTALLED
13 PROVIDE METAL BLOCKING IN WALL FOR FUTURE GRAB BAR INSTALLATION – TYPICAL ALL TYPE B DWELLING UNITS
14 TRANSFER TYPE SHOWER ENCLOSURE – TYPICAL ALL HC-T UNITS
15 ROLL-IN TYPE SHOWER ENCLOSURE – TYPICAL ALL HC-R UNITS
16 WALL MOUNTED TV - NOT IN CONTRACT. CONTRACTOR TO PROVIDE 12 GA METAL WALL BLOCKING- COORDINATE WITH OWNER. SEE ELECTRICAL FOR POWER AND DATA OUTLETS
17 GARBAGE DISPOSAL - SEE PLUMBING DRAWINGS
18 TRANSFER TYPE TUB - SEE PLUMBING DRAWINGS

GENERAL NOTES ENLARGED PLANS AND INTERIOR ELEVATIONS

GENERAL NOTES

A UNLESS SPECIFICALLY NOTED OTHERWISE - INTERIOR DIMENSIONS ARE TO FACE OF STUD, FACE OF CMU OR FACE OF CONCRETE WHERE INDICATED. WHERE FACE OF FINISH OR CLEAR DIMENSIONS ARE INDICATED FOR COORDINATION PURPOSES OR TO DESIGNATE REQUIRED CODE CLEARANCES, THE DIMENSION IS TYPICALLY DESIGNATED AS "FOF" (FACE OF FINISH) OR "CLR" (CLEAR).

B CONTRACTOR RESPONSIBLE FOR FIELD MEASUREMENTS ON OVERALL DIMENSIONS.

C ROUGH-IN AND CLEARANCE DIMENSIONS, BLOCKING AND ANCHORAGE FOR SHOWER UNITS, (AS WELL AS LAUNDRY EQUIPMENT, APPLIANCES, AND SIMILAR BUILT-IN OR DIMENSIONALLY CRITICAL ITEMS) IS TO BE PROVIDED PER THE MANUFACTURER'S WRITTEN INSTALLATION INSTRUCTIONS.

D DIMENSIONS INDICATED AT SHOWER FIXTURES ARE TO FACE OF FINSH AND ARE APPROXIMATE +/-. PRIOR TO BEGINNING PARTITION LAYOUT WORK OBTAIN ACTUAL SAMPLES OF EACH PREFABRICATED SHOWER ENCLOSURE AND CONSTRUCT MOCK-UPS OF EACH TYPICAL CONDITION TO ESTABLISH EXACT ROUGH-IN DIMENSIONS AND FRAMING, BLOCKING AND FINISH DETAILS.

E SHOWER UNITS SHALL BE GROUTED SOLID UNDERNEATH - FILL VOID BETWEEN FLOOR SLAB AND FLOOR OF SHOWER.

F DWELLING UNITS DESIGNATED AS "HC" ON THE PLANS ARE UNITS WITH MOBILITY FEATURES IN ACCORDANCE WITH APPLICABLE ACCESSIBILITY CODES. ROOMS NOTED "HC-R" ARE PROVIDED WITH ROLL-IN TYPE SHOWER ENCLOSURESS. ROOMS NOTED AS "HC-T" ARE PROVIDED WITH TRANSFER TYPE SHOWER ENCLOSURES. UNITS DESIGNATED WITH "C" ARE UNITS TO BE PROVIDED WITH COMMUNICATIONS FEATURES.

G ALL DWELLING UNITS NOT DESIGNATED AS "HC" ARE TO BE CONSTRUCTED AS "TYPE B" UNITS PER CHAPTER 11 OF ICC AND APPLICABLE PROVISIONS OF ICC/ANSI A117.1 AND THE FAIR HOUSING ACT DESIGN MANUAL.

H EXCEPT AS NOTED OTHERWISE, LAUNDRY EQUIPMENT AND RESIDENTIAL APPLIANCES ARE NOT IN CONTRACT (NIC) - LAUNDRY EQUIPMENT WILL BE FURNISHED AND INSTALLED BY THE OWNER'S SEPARATE LAUNDRY CONTRACTOR (WITH THE EXCEPTION OF STAFF APARTMENT LAUNDRY EQUIPMENT). RESIDENTIAL KITCHEN EQUIPMENT (WITH THE EXCEPTION OF WALL OVENS AND RANGE HOODS) WILL BE OWNER FURNISHED AND INSTALLED. PROVIDE ROUGH-IN FOR LAUNDRY EQUIPMENT AND RESIDENTIAL KITCHEN APPLIANCES. REFER TO ELECTRICAL DRAWINGS FOR POWER AND DATA - REFER TO PLUMBING DRAWINGS FOR GAS, WATER AND DRAINAGE - REFER TO MECHANICAL DRAWING FOR EXHAUSTING AS APPLICABLE. COORDINATE ROUGH-IN REQUIREMENTS WITH THE OWNER AND OBTAIN MANUFACTURER'S

I LOCATE WHEELCHAIR ACCESSIBLE WATER CLOSETS 17" FROM CENTERLINE OF WATER CLOSET TO FACE OF FINISH AT ADJACENT WALL, TYPICAL. FLUSH HANDLES TO BE LOCATED ON THE WIDE (OPEN) SIDE OF THE FIXTURE, TYPICAL.

J PROVIDE FLOOR DRAINS (FD) AT ROLL-IN (R) AND TRANSFER (T) SHOWERS. REFER TO PLUMBING DRAWINGS. SLOPE FLOORS TO DRAIN.

K WHERE NOTED AT HANDICAP ACCESSIBLE DWELLING UNITS, PROVIDE REMOVABLE BASE CABINETS AT KITCHEN AND BATHROOM SINKS COMPLYING WITH THE REQUIREMENTS OF ADA STANDARDS FOR ACCESSIBLE DESIGN (SECTION 606.2 EXCEPTION NO. 3).

L CONTRACTOR TO PROVIDE 12 GAGE METAL BLOCKING IN STUD WALLS FOR ANCHORAGE OF WALL MOUNTED ITEMS INCLUDING BUT NOT LIMITED TO TOILET ACCESSORIES, WALL CABINETS, WALL MOUNTED TV'S, SHELVING, TOILET PARTITIONS, OWNER FURNISHED EQUIPMENT INDICATED AND SIMILAR ITEMS. FOR "TYPE B" DWELLING UNITS, PROVIDE METAL BLOCKING IN WALLS FOR FUTURE INSTALLATIONS AS INDICATED. FOR WALL MOUNTED TV'S IN LOUNGES, PROVIDE METAL BLOCKING 24" ABOVE AND BELOW ELECTRICAL JUNCTION BOXES.

M REFER TO A026 FOR DESCRIPTION OF ALL PARTITION TYPES.

N REFER TO A100 (1/8" FLOOR PLANS) SERIES DRAWINGS AND A300 SERIES DRAWINGS (ENLARGED PLANS) FOR PARTITION TYPE LOCATIONS.

O REFER TO LS SERIES DRAWING (LIFE SAFETY PLANS) FOR LOCATIONS OF FIRE RATED WALLS AND PARTITIONS.

P REFER TO A000 SERIES DRAWINGS FOR WINDOW TYPES AND DOOR TYPES, SCHEDULES AND DETAILS.

Q REFER TO A000 SERIES DRAWINGS FOR INTERIOR FINISH SCHEDULES.

R REFER TO A100 SERIES DRAWINGS (ENLARGED PLANS) FOR ADDITIONAL PLAN NOTES.

S REFER TO SPECIFICATIONS SECTION 10 28 00 FOR TOILET ACCESSORY SCHEDULE

MICHAEL EVANS 4283 STATE OF MISSISSIPPI
04 MAR 2013

THE McCARTY COMPANY
DESIGN GROUP, P.A.
TELEPHONE: (662) 844-4403
FAX: (662) 844-0503
OFFICE ADDRESS: 533 WEST MAIN STREET TUPELO, MS 38804
MAILING ADDRESS: P.O. BOX 440 TUPELO, MS 38802

DESIGN ARCHITECT
Hanbury Evans Wright Vlattas + Company
120 Atlantic Street
Norfolk, VA 23510
757.321.9600
www.hewv.com

PROJECT TITLE
USM - CENTURY PARK SOUTH
IHL# 208-297
HATTIESBURG, MISSISSIPPI

THE UNIVERSITY OF SOUTHERN MISSISSIPPI

PROJECT NO: 2012020
DRAWN BY: Author
CHECKED BY: JTG
DATE ISSUED: 04 MAR 2013

REVISIONS & ADDENDUMS

SHEET TITLE
BUILDING A - INTERIOR ELEVATIONS & TOILET ACCESSORIES LEGEND

SHEET NUMBER
A603

3/4/2013 12:28:38 PM

Plot Date: BID DOCUMENTS - 04 MARCH 2013

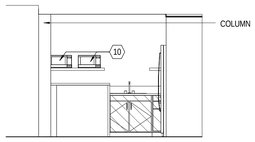

1 — 1/4" = 1'-0" — BUILDING B - B126 KITCHEN/LOUNGE - SOUTH
A313

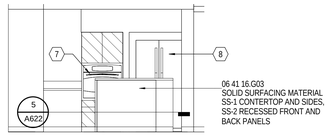

2 — 1/4" = 1'-0" — BUILDING B - B126 KITCHEN LOUNGE - WEST
A313

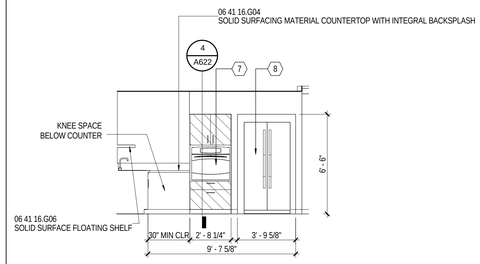

3 — 1/4" = 1'-0" — BUILDING B - B126 KITCHEN/LOUNGE - WEST
A313

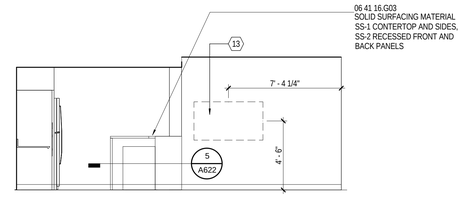

4 — 1/4" = 1'-0" — BUILDING B - B126 KITCHEN/LOUNGE - NORTH
A313

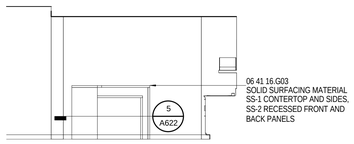

5 — 1/4" = 1'-0" — BUILDING B - B126 KITCHEN/LOUNGE - EAST - 2
A313

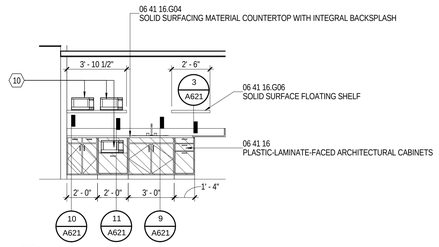

6 — 1/4" = 1'-0" — BUILDING B - B126 KITCHEN/LOUNGE - SOUTH
A313

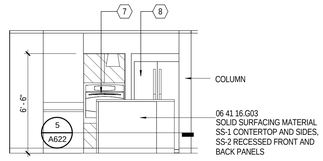

7 — 1/4" = 1'-0" — BUILDING B - B235 KITCHEN/LOUNG - SOUTH
A313

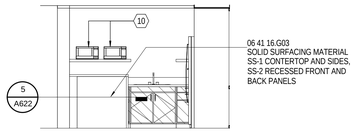

8 — 1/4" = 1'-0" — BUILDING B - B235 KITCHEN/LOUNGE - EAST
A313

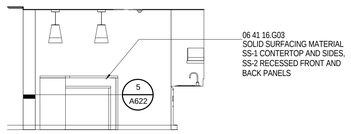

9 — 1/4" = 1'-0" — BUILDING B - B235 KITCHEN/LOUNGE - NORTH
A313

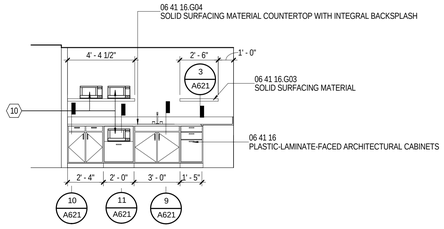

10 — 1/4" = 1'-0" — BUILDING B - B235 KITCHEN/LOUNGE - EAST - 2
A313

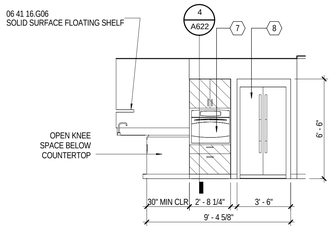

11 — 1/4" = 1'-0" — BUILDING B - B235 KITCHEN/LOUNGE -SOUTH - 2
A313

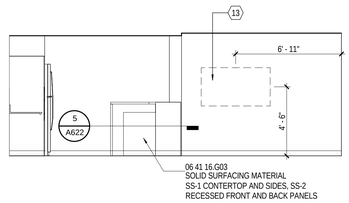

12 — 1/4" = 1'-0" — BUILDING B - B235 KITCHEN/LOUNGE - WEST
A313

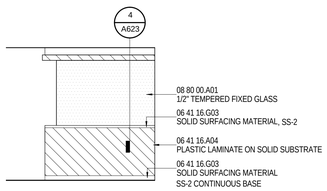

13 — 1/4" = 1'-0" — BUILDIING B - B103 FRONT DESK 1
A101B

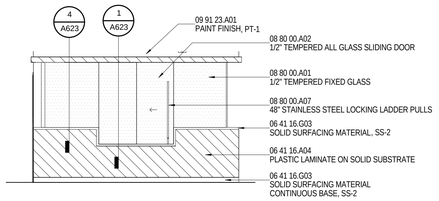

14 — 1/4" = 1'-0" — BUILDING B - B103 FRONT DESK 2
A101B

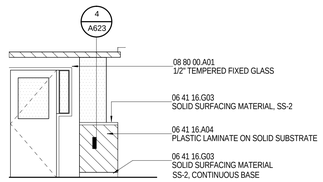

15 — 1/4" = 1'-0" — BUILDING B - B103 FRONT DESK 3
A101B

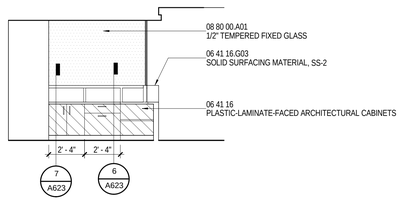

16 — 1/4" = 1'-0" — BUILDING B - B103 FRONT DESK - NORTH
A313

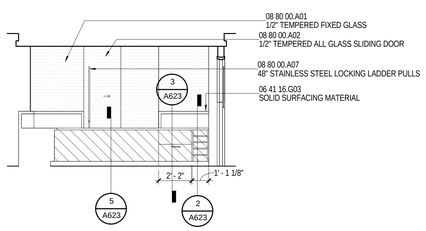

17 — 1/4" = 1'-0" — BUILDING B - B103 FRONT DESK - EAST
A313

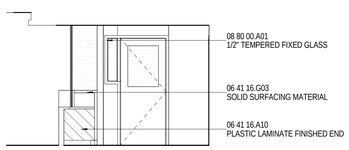

18 — 1/4" = 1'-0" — BUILDING B - B103 FRONT DESK - SOUTH
A313

MATERIAL KEYING

06 41 16	PLASTIC-LAMINATE-FACED ARCHITECTURAL CABINETS
06 41 16.A04	PLASTIC LAMINATE ON SOLID SUBSTRATE
06 41 16.A10	PLASTIC LAMINATE FINISHED END
06 41 16.G03	SOLID SURFACING MATERIAL
06 41 16.G04	SOLID SURFACING MATERIAL COUNTERTOP WITH INTEGRAL BACKSPLASH
06 41 16.G06	SOLID SURFACE FLOATING SHELF
08 80 00.A01	1/2" TEMPERED FIXED GLASS
08 80 00.A02	1/2" TEMPERED ALL GLASS SLIDING DOOR
08 80 00.A07	48" STAINLESS STEEL LOCKING LADDER PULLS
09 91 23.A01	PAINT FINISH

NEW WORK PLAN NOTES ENLARGED PLANS AND INTERIOR ELEVATIONS

NEW WORK NOTES

1 STACKED WASHER/DRYER UNIT (W/D) NOT IN CONTRACT
2 FREESTANDING WASHER (W) NOT IN CONTRACT
3 FREESTANDING DRYER (D) NOT IN CONTRACT
4 STACKED DRYERS (S/D) NOT IN CONTRACT
5 FREESTANDING RANGE, OWNER FURNISHED AND INSTALLED
6 DISHWASHER, OWNER FURNISHED AND INSTALLED
7 WALL OVEN - CONTRACTOR FURNISHED AND INSTALLED
8 REFRIGERATOR - OWNER FURNISHED AND INSTALLED
9 DOUBLE SINK - SEE PLUMBING DRAWINGS
10 MICROWAVE OVEN - OWNER FURNISHED AND INSTALLED
11 KITCHEN EXHAUST HOOD WITH FIRE EXTINGUISHING SYSTEM (APARTMENTS) - CONTRACTOR FURNISHED AND INSTALLED
12 DROP-IN RANGE, OWNER FURNISHED AND INSTALLED
13 PROVIDE METAL BLOCKING IN WALL FOR FUTURE GRAB BAR INSTALLATION – TYPICAL ALL TYPE B DWELLING UNITS
14 TRANSFER TYPE SHOWER ENCLOSURE – TYPICAL ALL HC-T UNITS
15 ROLL-IN TYPE SHOWER ENCLOSURE – TYPICAL ALL HC-R UNITS
16 WALL MOUNTED TV - NOT IN CONTRACT. CONTRACTOR TO PROVIDE 12 GA METAL WALL BLOCKING- COORDINATE WITH OWNER. SEE ELECTRICAL FOR POWER AND DATA OUTLETS
17 GARBAGE DISPOSAL - SEE PLUMBING DRAWINGS
18 TRANSFER TYPE TUB - SEE PLUMBING DRAWINGS

GENERAL NOTES ENLARGED PLANS AND INTERIOR ELEVATIONS

GENERAL NOTES

A UNLESS SPECIFICALLY NOTED OTHERWISE - INTERIOR DIMENSIONS ARE TO FACE OF STUD, FACE OF CMU OR FACE OF CONCRETE WHERE INDICATED. WHERE FACE OF FINISH OR CLEAR DIMENSIONS ARE INDICATED FOR COORDINATION PURPOSES OR TO DESIGNATE REQUIRED CODE CLEARANCES, THE DIMENSION IS TYPICALLY DESIGNATED AS "FOF" (FACE OF FINISH) OR "CLR" (CLEAR).

B CONTRACTOR RESPONSIBLE FOR FIELD MEASUREMENTS ON OVERALL DIMENSIONS.

C ROUGH-IN AND CLEARANCE DIMENSIONS, BLOCKING AND ANCHORAGE FOR SHOWER UNITS, (AS WELL AS LAUNDRY EQUIPMENT, APPLIANCES, AND SIMILAR BUILT-IN OR DIMENSIONALLY CRITICAL ITEMS) IS TO BE PROVIDED PER THE MANUFACTURER'S WRITTEN INSTALLATION INSTRUCTIONS.

D DIMENSIONS INDICATED AT SHOWER FIXTURES ARE TO FACE OF FINISH AND APPROXIMATE +/-. PRIOR TO BEGINNING PARTITION LAYOUT WORK OBTAIN ACTUAL SAMPLES OF EACH PREFABRICATED SHOWER ENCLOSURE AND CONSTRUCT MOCK-UPS OF EACH TYPICAL CONDITION TO ESTABLISH EXACT ROUGH-IN DIMENSIONS AND FRAMING, BLOCKING AND FINISH DETAILS.

E SHOWER UNITS SHALL BE GROUTED SOLID UNDERNEATH - FILL VOID BETWEEN FLOOR SLAB AND FLOOR OF SHOWER.

F DWELLING UNITS DESIGNATED AS "HC" ON THE PLANS ARE UNITS WITH MOBILITY FEATURES IN ACCORDANCE WITH APPLICABLE ACCESSIBILITY CODES. ROOMS NOTED "HC-R" ARE PROVIDED WITH ROLL-IN TYPE SHOWER ENCLOSURESS. ROOMS NOTED AS "HC-T" ARE PROVIDED WITH TRANSFER TYPE SHOWER ENCLOSURES. UNITS DESIGNATED WITH "C" ARE UNITS TO BE PROVIDED WITH COMMUNICATIONS FEATURES.

G ALL DWELLING UNITS NOT DESIGNATED AS "HC" ARE TO BE CONSTRUCTED AS "TYPE B" UNITS PER CHAPTER 11 OF ICC AND APPLICABLE PROVISIONS OF ICC/ANSI A117.1 AND THE FAIR HOUSING ACT DESIGN MANUAL.

H EXCEPT AS NOTED OTHERWISE, LAUNDRY EQUIPMENT AND RESIDENTIAL APPLIANCES ARE NOT IN CONTRACT (NIC) - LAUNDRY EQUIPMENT WILL BE FURNISHED AND INSTALLED BY THE OWNER'S SEPARATE LAUNDRY CONTRACTOR (WITH THE EXCEPTION OF STAFF APARTMENT LAUNDRY EQUIPMENT). RESIDENTIAL KITCHEN EQUIPMENT (WITH THE EXCEPTION OF WALL OVENS AND RANGE HOODS) WILL BE OWNER FURNISHED AND INSTALLED. PROVIDE ROUGH-IN FOR LAUNDRY EQUIPMENT AND RESIDENTIAL KITCHEN APPLIANCES. REFER TO ELECTRICAL DRAWINGS FOR POWER AND DATA - REFER TO PLUMBING DRAWINGS FOR GAS, WATER AND DRAINAGE - REFER TO MECHANICAL DRAWING FOR EXHAUSTING AS APPLICABLE. COORDINATE ROUGH-IN REQUIREMENTS WITH THE OWNER AND OBTAIN MANUFACTURER'S

I LOCATE WHEELCHAIR ACCESSIBLE WATER CLOSETS 17" FROM CENTERLINE OF WATER CLOSET TO FACE OF FINISH AT ADJACENT WALL, TYPICAL. FLUSH HANDLES TO BE LOCATED ON THE WIDE (OPEN) SIDE OF THE FIXTURE, TYPICAL.

J PROVIDE FLOOR DRAINS (FD) AT ROLL-IN (R) AND TRANSFER (T) SHOWERS. REFER TO PLUMBING DRAWINGS. SLOPE FLOORS TO DRAIN.

K WHERE NOTED AT HANDICAP ACCESSIBLE DWELLING UNITS, PROVIDE REMOVABLE BASE CABINETS AT KITCHEN AND BATHROOM SINKS COMPLYING WITH THE REQUIREMENTS OF ADA STANDARDS FOR ACCESSIBLE DESIGN (SECTION 606.2 EXCEPTION NO. 3).

L CONTRACTOR TO PROVIDE 12 GAGE METAL BLOCKING IN STUD WALLS FOR ANCHORAGE OF WALL MOUNTED ITEMS INCLUDING BUT NOT LIMITED TO TOILET ACCESSORIES, WALL CABINETS, WALL MOUNTED TVS, SHELVING, TOILET PARTITIONS, OWNER FURNISHED EQUIPMENT INDICATED AND SIMILAR ITEMS. FOR "TYPE B" DWELLING UNITS, PROVIDE METAL BLOCKING IN WALLS FOR FUTURE INSTALLATIONS AS INDICATED. FOR WALL MOUNTED TV'S IN LOUNGES, PROVIDE METAL BLOCKING 24" ABOVE AND BELOW ELECTRICAL JUNCTION BOXES.

M REFER TO A026 FOR DESCRIPTION OF ALL PARTITION TYPES.

N REFER TO A100 (1/8" FLOOR PLANS) SERIES DRAWINGS AND A300 SERIES DRAWINGS (ENLARGED PLANS) FOR PARTITION TYPE LOCATIONS.

O REFER TO LS SERIES DRAWING (LIFE SAFETY PLANS) FOR LOCATIONS OF FIRE RATED WALLS AND PARTITIONS.

P REFER TO A200 SERIES DRAWINGS FOR WINDOW TYPES AND DOOR TYPES, SCHEDULES AND DETAILS.

Q REFER TO A000 SERIES DRAWINGS FOR INTERIOR FINISH SCHEDULES.

R REFER TO A100 SERIES DRAWINGS (ENLARGED PLANS) FOR ADDITIONAL PLAN NOTES.

S REFER TO SPECIFICATIONS SECTION 10 28 00 FOR TOILET ACCESSORY SCHEDULE

THE McCARTY COMPANY
DESIGN GROUP, P.A.
TELEPHONE: (662) 844-4400
FAX: (662) 844-0500
OFFICE ADDRESS: 333 WEST MAIN STREET TUPELO, MS 38804
MAILING ADDRESS: P.O. BOX 440 TUPELO, MS 38802

DESIGN ARCHITECT
Hanbury Evans Wright Vlattas + Company
120 Atlantic Street
Norfolk, VA 23510
757.321.9600
www.hewv.com

PROJECT TITLE
USM - CENTURY PARK SOUTH
IHL# 208-297
HATTIESBURG, MS

THE UNIVERSITY OF SOUTHERN MISSISSIPPI

PROJECT NO: 2012020
DRAWN BY: SLR
CHECKED BY: JTG
DATE ISSUED: 04 MAR 2013

REVISIONS & ADDENDUMS

SHEET TITLE
BLDG B & C - INTERIOR ELEVATIONS - COMMON AREAS

SHEET NUMBER
A604

Plot Date: BID DOCUMENTS - 04 MARCH 2013

3/4/2013 12:32:23 PM

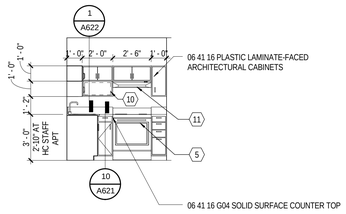

1 — 1/4" = 1'-0" — INTERIOR ELEVATION - KITCHEN - 1BR & 2BR STAFF APT - BLDG B & C

A314

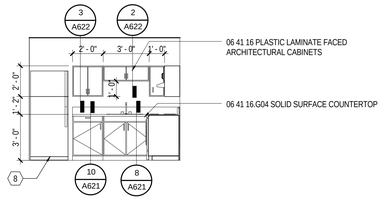

2 — 1/4" = 1'-0" — INTERIOR ELEVATION - KITCHEN - 1BR STAFF APT - BLDG B & C

A314

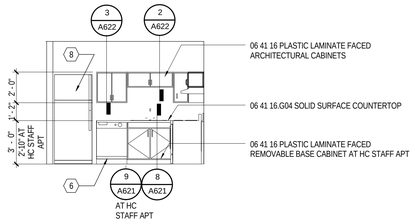

3 — 1/4" = 1'-0" — INTERIOR ELEVATION - KITCHEN - 2BR STAFF APT - BLDG B

A314

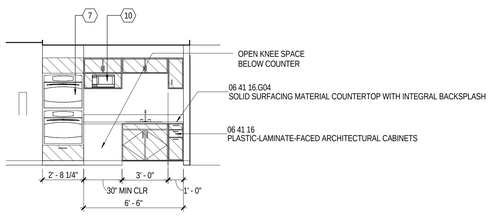

5 — 1/4" = 1'-0" — BUILDING C - C113 KITCHEN/LOUNGE - WEST

A313

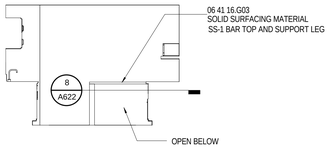

6 — 1/4" = 1'-0" — BUILDING C - C113 KITCHEN/LOUNGE - NORTH

A313

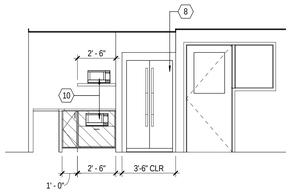

7 — 1/4" = 1'-0" — BUILDING C - C113 KITCHEN/LOUNGE - EAST

A313

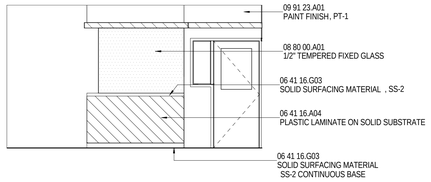

4 — 1/4" = 1'-0" — BUILDING C - C104 FRONT DESK 1

A313

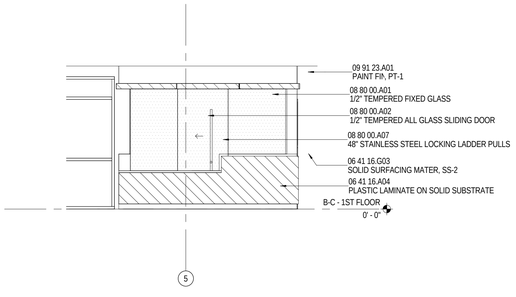

8 — 1/4" = 1'-0" — BUILDING C - C104 FRONT DESK 2

A101C

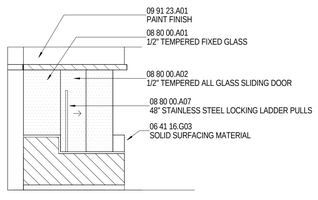

9 — 1/4" = 1'-0" — BUILDING C - C104 FRONT DESK 3

A101C

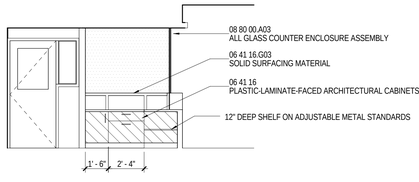

10 — 1/4" = 1'-0" — BUILDING C - C104 FRONT DESK - WEST

A313

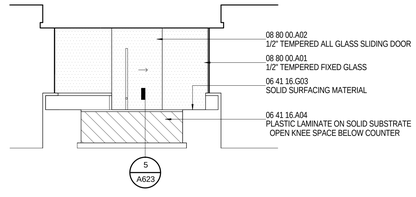

11 — 1/4" = 1'-0" — BUILDING C - C104 FRONT DESK - NORTH

A313

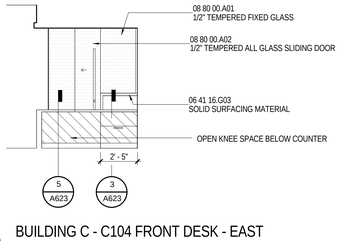

12 — 1/4" = 1'-0" — BUILDING C - C104 FRONT DESK - EAST

A313

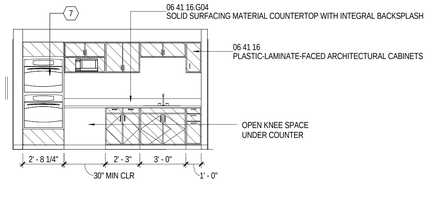

13 — 1/4" = 1'-0" — BUILDING C - C213A KITCHEN - WEST

A102C

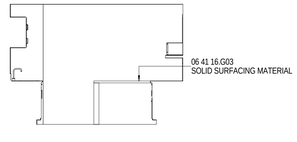

14 — 1/4" = 1'-0" — BUILDING C - C213A KITCHEN - NORTH

A102C

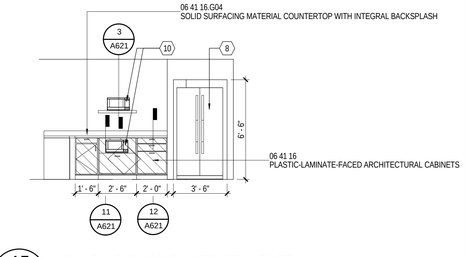

15 — 1/4" = 1'-0" — BUILDING C - C213A KITCHEN - EAST

A102C

MATERIAL KEYING

06 41 16	PLASTIC-LAMINATE-FACED ARCHITECTURAL CABINETS
06 41 16.A04	PLASTIC LAMINATE ON SOLID SUBSTRATE
06 41 16.G03	SOLID SURFACING MATERIAL
06 41 16.G04	SOLID SURFACING MATERIAL COUNTERTOP WITH INTEGRAL BACKSPLASH
08 36 13.A01	OVERHEAD SECTIONAL DOORS
08 80 00.A01	1/2" TEMPERED FIXED GLASS
08 80 00.A02	1/2" TEMPERED ALL GLASS SLIDING DOOR
08 80 00.A03	ALL GLASS COUNTER ENCLOSURE ASSEMBLY
08 80 00.A07	48" STAINLESS STEEL LOCKING LADDER PULLS
09 91 23.A01	PAINT FINISH

NEW WORK PLAN NOTES ENLARGED PLANS AND INTERIOR ELEVATIONS

NEW WORK NOTES

1 STACKED WASHER/DRYER UNIT (W/D) NOT IN CONTRACT
2 FREESTANDING WASHER (W) NOT IN CONTRACT
3 FREESTANDING DRYER (D) NOT IN CONTRACT
4 STACKED DRYERS (S/D) NOT IN CONTRACT
5 FREESTANDING RANGE, OWNER FURNISHED AND INSTALLED
6 DISHWASHER, OWNER FURNISHED AND INSTALLED
7 WALL OVEN - CONTRACTOR FURNISHED AND INSTALLED
8 REFRIGERATOR - OWNER FURNISHED AND INSTALLED
9 DOUBLE SINK - SEE PLUMBING DRAWINGS
10 MICROWAVE OVEN - OWNER FURNISHED AND INSTALLED
11 KITCHEN EXHAUST HOOD WITH FIRE EXTINGUISHING SYSTEM (APARTMENTS) - CONTRACTOR FURNISHED AND INSTALLED
12 DROP-IN RANGE, OWNER FURNISHED AND INSTALLED
13 PROVIDE METAL BLOCKING IN WALL FOR FUTURE GRAB BAR INSTALLATION – TYPICAL ALL TYPE B DWELLING UNITS
14 TRANSFER TYPE SHOWER ENCLOSURE – TYPICAL ALL HC-T UNITS
15 ROLL-IN TYPE SHOWER ENCLOSURE – TYPICAL ALL HC-R UNITS
16 WALL MOUNTED TV - NOT IN CONTRACT. CONTRACTOR TO PROVIDE 12 GA METAL WALL BLOCKING- COORDINATE WITH OWNER. SEE ELECTRICAL FOR POWER AND DATA OUTLETS
17 GARBAGE DISPOSAL - SEE PLUMBING DRAWINGS
18 TRANSFER TYPE TUB - SEE PLUMBING DRAWINGS

GENERAL NOTES ENLARGED PLANS AND INTERIOR ELEVATIONS

GENERAL NOTES

A UNLESS SPECIFICALLY NOTED OTHERWISE - INTERIOR DIMENSIONS ARE TO FACE OF STUD, FACE OF CMU OR FACE OF CONCRETE WHERE INDICATED. WHERE FACE OF FINISH OR CLEAR DIMENSIONS ARE INDICATED FOR COORDINATION PURPOSES OR TO DESIGNATE REQUIRED CODE CLEARANCES, THE DIMENSION IS TYPICALLY DESIGNATED AS "FOF" (FACE OF FINISH) OR "CLR" (CLEAR).
B CONTRACTOR RESPONSIBLE FOR FIELD MEASUREMENTS ON OVERALL DIMENSIONS.
C ROUGH-IN AND CLEARANCE DIMENSIONS, BLOCKING AND ANCHORAGE FOR SHOWER UNITS, (AS WELL AS LAUNDRY EQUIPMENT, APPLIANCES, AND SIMILAR BUILT-IN OR DIMENSIONALLY CRITICAL ITEMS) IS TO BE PROVIDED PER THE MANUFACTURER'S WRITTEN INSTALLATION INSTRUCTIONS.
D DIMENSIONS INDICATED AT SHOWER FIXTURES ARE TO FACE OF FINISH AND APPROXIMATE +/- . PRIOR TO BEGINNING PARTITION LAYOUT WORK OBTAIN ACTUAL SAMPLES OF EACH PREFABRICATED SHOWER ENCLOSURE AND CONSTRUCT MOCK-UPS OF EACH TYPICAL CONDITION TO ESTABLISH EXACT ROUGH-IN DIMENSIONS AND FRAMING, BLOCKING AND FINISH DETAILS.
E SHOWER UNITS SHALL BE GROUTED SOLID UNDERNEATH - FILL VOID BETWEEN FLOOR SLAB AND FLOOR OF SHOWER.
F DWELLING UNITS DESIGNATED AS "HC" ON THE PLANS ARE UNITS WITH MOBILITY FEATURES IN ACCORDANCE WITH APPLICABLE ACCESSIBILITY CODES. ROOMS NOTED "HC-R" ARE PROVIDED WITH ROLL-IN TYPE SHOWER ENCLOSURESS. ROOMS NOTED AS "HC-T" ARE PROVIDED WITH TRANSFER TYPE SHOWER ENCLOSURES. UNITS DESIGNATED WITH "C" ARE UNITS TO BE PROVIDED WITH COMMUNICATIONS FEATURES.
G ALL DWELLING UNITS NOT DESIGNATED AS "HC" ARE TO BE CONSTRUCTED AS "TYPE B" UNITS PER CHAPTER 11 OF ICC AND APPLICABLE PROVISIONS OF ICC/ANSI A117.1 AND THE FAIR HOUSING ACT DESIGN MANUAL.
H EXCEPT AS NOTED OTHERWISE, LAUNDRY EQUIPMENT AND RESIDENTIAL APPLIANCES ARE NOT IN CONTRACT (NIC) - LAUNDRY EQUIPMENT WILL BE FURNISHED AND INSTALLED BY THE OWNER'S SEPARATE LAUNDRY CONTRACTOR (WITH THE EXCEPTION OF STAFF APARTMENT LAUNDRY EQUIPMENT). RESIDENTIAL KITCHEN EQUIPMENT (WITH THE EXCEPTION OF WALL OVENS AND RANGE HOODS) WILL BE OWNER FURNISHED AND INSTALLED. PROVIDE ROUGH-IN FOR LAUNDRY EQUIPMENT AND RESIDENTIAL KITCHEN APPLIANCES. REFER TO ELECTRICAL DRAWINGS FOR POWER AND DATA - REFER TO PLUMBING DRAWINGS FOR GAS, WATER AND DRAINAGE - REFER TO MECHANICAL DRAWING FOR EXHAUSTING AS APPLICABLE. COORDINATE ROUGH-IN REQUIREMENTS WITH THE OWNER AND OBTAIN MANUFACTURER'S
I LOCATE WHEELCHAIR ACCESSIBLE WATER CLOSETS 17" FROM CENTERLINE OF WATER CLOSET TO FACE OF FINISH AT ADJACENT WALL, TYPICAL. FLUSH HANDLES TO BE LOCATED ON THE WIDE (OPEN) SIDE OF THE FIXTURE, TYPICAL.
J PROVIDE FLOOR DRAINS (FD) AT ROLL-IN (R) AND TRANSFER (T) SHOWERS. REFER TO PLUMBING DRAWINGS, SLOPE FLOORS TO DRAIN.
K WHERE NOTED AT HANDICAP ACCESSIBLE DWELLING UNITS, PROVIDE REMOVABLE BASE CABINETS AT KITCHEN AND BATHROOM SINKS COMPLYING WITH THE REQUIREMENTS OF ADA STANDARDS FOR ACCESSIBLE DESIGN (SECTION 606.2 EXCEPTION NO. 3).
L CONTRACTOR TO PROVIDE 12 GAGE METAL BLOCKING IN STUD WALLS FOR ANCHORAGE OF WALL MOUNTED ITEMS INCLUDING BUT NOT LIMITED TO TOILET ACCESSORIES, WALL CABINETS, WALL MOUNTED TV'S, SHELVING, TOILET PARTITIONS, OWNER FURNISHED EQUIPMENT INDICATED AND SIMILAR ITEMS. FOR "TYPE B" DWELLING UNITS, PROVIDE METAL BLOCKING IN WALLS FOR FUTURE INSTALLATIONS AS INDICATED. FOR WALL MOUNTED TV'S IN LOUNGES, PROVIDE METAL BLOCKING 24" ABOVE AND BELOW ELECTRICAL JUNCTION BOXES.
M REFER TO A026 FOR DESCRIPTION OF ALL PARTITION TYPES.
N REFER TO A100 (1/8" FLOOR PLANS) SERIES DRAWINGS AND A300 SERIES DRAWINGS (ENLARGED PLANS) FOR PARTITION TYPE LOCATIONS.
O REFER TO LS SERIES DRAWING (LIFE SAFETY PLANS) FOR LOCATIONS OF FIRE RATED WALLS AND PARTITIONS.
P REFER TO A000 SERIES DRAWINGS FOR WINDOW TYPES AND DOOR TYPES, SCHEDULES AND DETAILS.
Q REFER TO A000 SERIES DRAWINGS FOR INTERIOR FINISH SCHEDULES.
R REFER TO A100 SERIES DRAWINGS (ENLARGED PLANS) FOR ADDITIONAL PLAN NOTES.
S REFER TO SPECIFICATIONS SECTION 10 28 00 FOR TOILET ACCESSORY SCHEDULE

REGISTERED ARCHITECT MICHAEL EVANS 4283 STATE OF MISSISSIPPI
09 MAR 2013

THE McCARTY COMPANY DESIGN GROUP, P.A.
TELEPHONE: (662) 844-4400
FAX: (662) 844-0500
OFFICE ADDRESS: 533 WEST MAIN STREET TUPELO, MS 38804
MAILING ADDRESS: P.O. BOX 440 TUPELO, MS 38802

DESIGN ARCHITECT
Hanbury Evans Wright Vlattas + Company
120 Atlantic Street
Norfolk, VA 23510
757.321.9600
www.hewv.com

PROJECT TITLE
USM - CENTURY PARK SOUTH
IHL# 208-297
HATTIESBURG, MS

THE UNIVERSITY OF SOUTHERN MISSISSIPPI

PROJECT NO: 2012020
DRAWN BY: SLR & RC
CHECKED BY: JTG
DATE ISSUED: 04 MAR 2013

REVISIONS & ADDENDUMS

SHEET TITLE
BLDG B & C - INTERIOR ELEVATIONS - COMMON AREAS AND STAFF APTS

SHEET NUMBER
A605

3/8/2013 1:48:16 PM

Plot Date: BID DOCUMENTS - 04 MARCH 2013

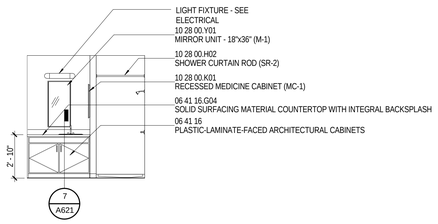

1 — 1/4" = 1'-0" — INTERIOR ELEVATION - 1BR STAFF APARTMENT — A314

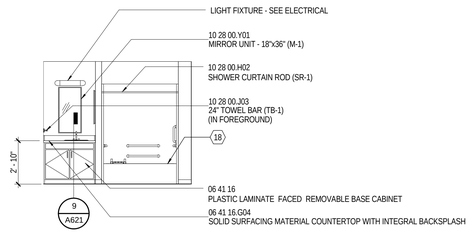

2 — 1/4" = 1'-0" — INTERIOR ELEVATION - 2BR STAFF APARTMENT - HC-T — A314

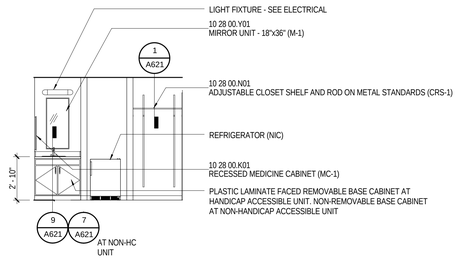

3 — 1/4" = 1'-0" — INTERIOR ELEVATION - STUDENT ROOM — A102B

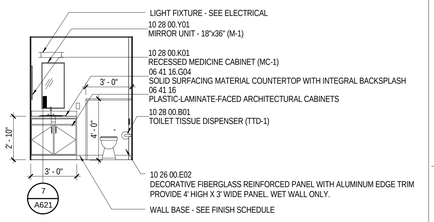

4 — 1/4" = 1'-0" — INTERIOR ELEVATION - STUDENT ROOM — A102B

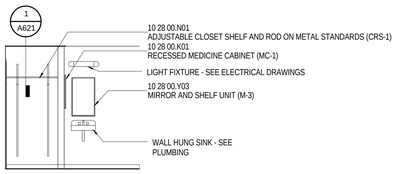

5 — 1/4" = 1'-0" — INTERIOR ELEVATION - STUDENT ROOM — A101C

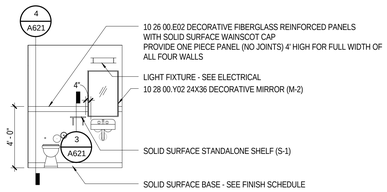

6 — 1/4" = 1'-0" — INTERIOR ELEVATION - SHARED STUDENT BATHS - BLDG C — A101C

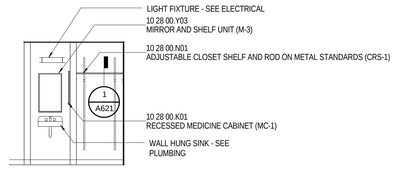

7 — 1/4" = 1'-0" — INTERIOR ELEVATION - STUDENT ROOM — A315

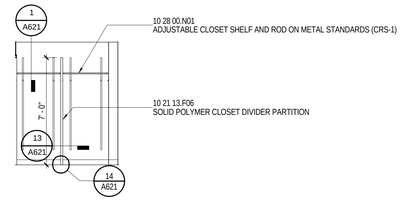

8 — 1/4" = 1'-0" — INTERIOR ELEVATION - STUDENT ROOM — A315

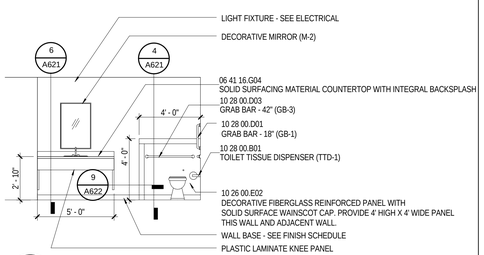

9 — 1/4" = 1'-0" — INTERIOR ELEVATION - LOBBY TOILET — A315

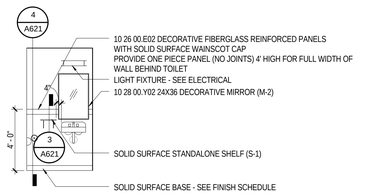

10 — 1/4" = 1'-0" — INTERIOR ELEVATION - SHARED STUDENT BATHS - BLDG C — A101C

MATERIAL KEYING

06 41 16	PLASTIC-LAMINATE-FACED ARCHITECTURAL CABINETS
06 41 16.G04	SOLID SURFACING MATERIAL COUNTERTOP WITH INTEGRAL BACKSPLASH
10 21 13.F06	SOLID POLYMER CLOSET DIVIDER PARTITION
10 28 00.B01	TOILET TISSUE DISPENSER (TTD-1)
10 28 00.D03	GRAB BAR - 42" (GB-3)
10 28 00.H02	SHOWER CURTAIN ROD (SR-2)
10 28 00.J03	24" TOWEL BAR (TB-1)
10 28 00.K01	RECESSED MEDICINE CABINET (MC-1)
10 28 00.N01	ADJUSTABLE CLOSET SHELF AND ROD ON METAL STANDARDS (CRS-1)
10 28 00.Y01	MIRROR UNIT - 18"x36" (M-1)
10 28 00.Y03	MIRROR AND SHELF UNIT (M-3)

NEW WORK PLAN NOTES ENLARGED PLANS AND INTERIOR ELEVATIONS

NEW WORK NOTES

1 STACKED WASHER/DRYER UNIT (W/D) NOT IN CONTRACT
2 FREESTANDING WASHER (W) NOT IN CONTRACT
3 FREESTANDING DRYER (D) NOT IN CONTRACT
4 STACKED DRYERS (S/D) NOT IN CONTRACT
5 FREESTANDING RANGE, OWNER FURNISHED AND INSTALLED
6 DISHWASHER, OWNER FURNISHED AND INSTALLED
7 WALL OVEN - CONTRACTOR FURNISHED AND INSTALLED
8 REFRIGERATOR - OWNER FURNISHED AND INSTALLED
9 DOUBLE SINK - SEE PLUMBING DRAWINGS
10 MICROWAVE OVEN - OWNER FURNISHED AND INSTALLED
11 KITCHEN EXHAUST HOOD WITH FIRE EXTINGUISHING SYSTEM (APARTMENTS) - CONTRACTOR FURNISHED AND INSTALLED
12 DROP-IN RANGE, OWNER FURNISHED AND INSTALLED
13 PROVIDE METAL BLOCKING IN WALL FOR FUTURE GRAB BAR INSTALLATION – TYPICAL ALL TYPE B DWELLING UNITS
14 TRANSFER TYPE SHOWER ENCLOSURE – TYPICAL ALL HC-T UNITS
15 ROLL-IN TYPE SHOWER ENCLOSURE – TYPICAL ALL HC-R UNITS
16 WALL MOUNTED TV - NOT IN CONTRACT. CONTRACTOR TO PROVIDE 12 GA METAL WALL BLOCKING- COORDINATE WITH OWNER. SEE ELECTRICAL FOR POWER AND DATA OUTLETS
17 GARBAGE DISPOSAL - SEE PLUMBING DRAWINGS
18 TRANSFER TYPE TUB - SEE PLUMBING DRAWINGS

GENERAL NOTES ENLARGED PLANS AND INTERIOR ELEVATIONS

GENERAL NOTES

A UNLESS SPECIFICALLY NOTED OTHERWISE - INTERIOR DIMENSIONS ARE TO FACE OF STUD, FACE OF CMU OR FACE OF CONCRETE WHERE INDICATED. WHERE FACE OF FINISH OR CLEAR DIMENSIONS ARE INDICATED FOR COORDINATION PURPOSES OR TO DESIGNATE REQUIRED CODE CLEARANCES, THE DIMENSION IS TYPICALLY DESIGNATED AS "FOF" (FACE OF FINISH) OR "CLR" (CLEAR).

B CONTRACTOR RESPONSIBLE FOR FIELD MEASUREMENTS ON OVERALL DIMENSIONS.

C ROUGH-IN AND CLEARANCE DIMENSIONS, BLOCKING AND ANCHORAGE FOR SHOWER UNITS, (AS WELL AS LAUNDRY EQUIPMENT, APPLIANCES, AND SIMILAR BUILT-IN OR DIMENSIONALLY CRITICAL ITEMS) IS TO BE PROVIDED PER THE MANUFACTURER'S WRITTEN INSTALLATION INSTRUCTIONS.

D DIMENSIONS INDICATED AT SHOWER FIXTURES ARE TO FACE OF FINISH AND APPROXIMATE +/-. PRIOR TO BEGINNING PARTITION LAYOUT WORK OBTAIN ACTUAL SAMPLES OF EACH PREFABRICATED SHOWER ENCLOSURE AND CONSTRUCT MOCK-UPS OF EACH TYPICAL CONDITION TO ESTABLISH EXACT ROUGH-IN DIMENSIONS AND FRAMING, BLOCKING AND FINISH DETAILS.

E SHOWER UNITS SHALL BE GROUTED SOLID UNDERNEATH - FILL VOID BETWEEN FLOOR SLAB AND FLOOR OF SHOWER.

F DWELLING UNITS DESIGNATED AS "HC" ON THE PLANS ARE UNITS WITH MOBILITY FEATURES IN ACCORDANCE WITH APPLICABLE ACCESSIBILITY CODES. ROOMS NOTED "HC-R" ARE PROVIDED WITH ROLL-IN TYPE SHOWER ENCLOSURESS. ROOMS NOTED AS "HC-T" ARE PROVIDED WITH TRANSFER TYPE SHOWER ENCLOSURES. UNITS DESIGNATED WITH "C" ARE UNITS TO BE PROVIDED WITH COMMUNICATIONS FEATURES.

G ALL DWELLING UNITS NOT DESIGNATED AS "HC" ARE TO BE CONSTRUCTED AS "TYPE B" UNITS PER CHAPTER 11 OF ICC AND APPLICABLE PROVISIONS OF ICC/ANSI A117.1 AND THE FAIR HOUSING ACT DESIGN MANUAL.

H EXCEPT AS NOTED OTHERWISE, LAUNDRY EQUIPMENT AND RESIDENTIAL APPLIANCES ARE NOT IN CONTRACT (NIC) - LAUNDRY EQUIPMENT WILL BE FURNISHED AND INSTALLED BY THE OWNER'S SEPARATE LAUNDRY CONTRACTOR (WITH THE EXCEPTION OF STAFF APARTMENT LAUNDRY EQUIPMENT). RESIDENTIAL KITCHEN EQUIPMENT (WITH THE EXCEPTION OF WALL OVENS AND RANGE HOODS) WILL BE OWNER FURNISHED AND INSTALLED. PROVIDE ROUGH-IN FOR LAUNDRY EQUIPMENT AND RESIDENTIAL KITCHEN APPLIANCES. REFER TO ELECTRICAL DRAWINGS FOR POWER AND DATA - REFER TO PLUMBING DRAWINGS FOR GAS, WATER AND DRAINAGE - REFER TO MECHANICAL DRAWING FOR EXHAUSTING AS APPLICABLE. COORDINATE ROUGH-IN REQUIREMENTS WITH THE OWNER AND OBTAIN MANUFACTURER'S

I LOCATE WHEELCHAIR ACCESSIBLE WATER CLOSETS 17" FROM CENTERLINE OF WATER CLOSET TO FACE OF FINISH AT ADJACENT WALL, TYPICAL. FLUSH HANDLES TO BE LOCATED ON THE WIDE (OPEN) SIDE OF THE FIXTURE, TYPICAL.

J PROVIDE FLOOR DRAINS (FD) AT ROLL-IN (R) AND TRANSFER (T) SHOWERS. REFER TO PLUMBING DRAWINGS, SLOPE FLOORS TO DRAIN.

K WHERE NOTED AT HANDICAP ACCESSIBLE DWELLING UNITS, PROVIDE REMOVABLE BASE CABINETS AT KITCHEN AND BATHROOM SINKS COMPLYING WITH THE REQUIREMENTS OF ADA STANDARDS FOR ACCESSIBLE DESIGN (SECTION 606.2 EXCEPTION NO. 3).

L CONTRACTOR TO PROVIDE 12 GAGE METAL BLOCKING IN STUD WALLS FOR ANCHORAGE OF WALL MOUNTED ITEMS INCLUDING BUT NOT LIMITED TO TOILET ACCESSORIES, WALL CABINETS, WALL MOUNTED TV'S, SHELVING, TOILET PARTITIONS, OWNER FURNISHED EQUIPMENT INDICATED AND SIMILAR ITEMS. FOR "TYPE B" DWELLING UNITS, PROVIDE METAL BLOCKING IN WALLS FOR FUTURE INSTALLATIONS AS INDICATED. FOR WALL MOUNTED TVS IN LOUNGES, PROVIDE METAL BLOCKING 24" ABOVE AND BELOW ELECTRICAL JUNCTION BOXES.

M REFER TO A026 FOR DESCRIPTION OF ALL PARTITION TYPES.

N REFER TO A100 (1/8" FLOOR PLANS) SERIES DRAWINGS AND A300 SERIES DRAWINGS (ENLARGED PLANS) FOR PARTITION TYPE LOCATIONS.

O REFER TO LS SERIES DRAWING (LIFE SAFETY PLANS) FOR LOCATIONS OF FIRE RATED WALLS AND PARTITIONS.

P REFER TO A000 SERIES DRAWINGS FOR WINDOW TYPES AND DOOR TYPES, SCHEDULES AND DETAILS.

Q REFER TO A000 SERIES DRAWINGS FOR INTERIOR FINISH SCHEDULES.

R REFER TO A100 SERIES DRAWINGS (ENLARGED PLANS) FOR ADDITIONAL PLAN NOTES.

S REFER TO SPECIFICATIONS SECTION 10 28 00 FOR TOILET ACCESSORY SCHEDULE

THE McCARTY COMPANY
DESIGN GROUP, P.A.
TELEPHONE: (662) 844-4400
FAX: (662) 844-0500
OFFICE ADDRESS: 533 WEST MAIN STREET TUPELO, MS 38804
MAILING ADDRESS: P.O. BOX 440 TUPELO, MS 38802

DESIGN ARCHITECT
Hanbury Evans Wright Vlattas + Company
120 Atlantic Street
Norfolk, VA 23510
757.321.9600
www.hewv.com

PROJECT TITLE
USM - CENTURY PARK SOUTH
IHL# 208-297
HATTIESBURG, MS

THE UNIVERSITY OF SOUTHERN MISSISSIPPI

PROJECT NO: 2012020
DRAWN BY: RMC
CHECKED BY: JTG
DATE ISSUED: 04 MAR 2013

REVISIONS & ADDENDUMS

SHEET TITLE
BLDG B & C - INTERIOR ELEVATIONS - STUDENT ROOMS AND STAFF APTS

SHEET NUMBER
A606

3/8/2013 1:48:38 PM

Plot Date: BID DOCUMENTS - 04 MARCH 2013

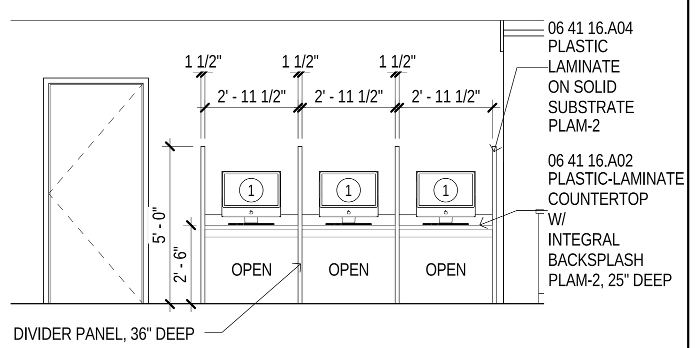

1 CORRIDOR HC100
1/4" = 1'-0"

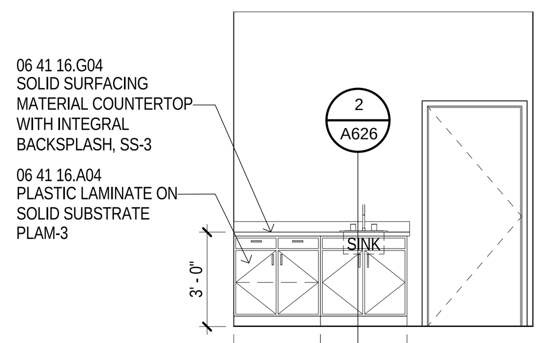

2 HEALTH ED CONF. HC103
1/4" = 1'-0"
A101A

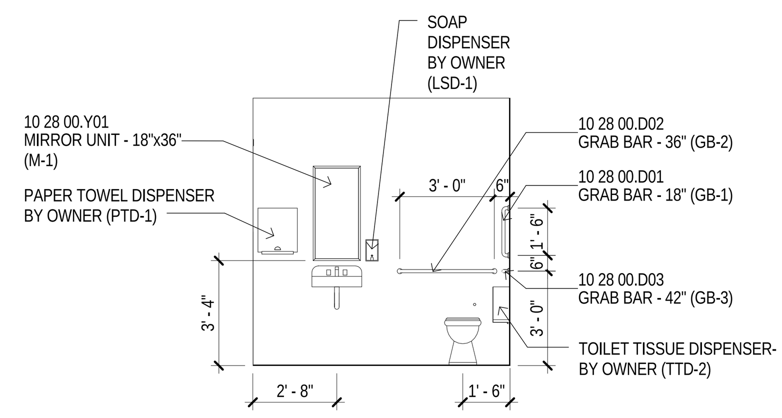

3 TLT HC105
1/4" = 1'-0"
A332

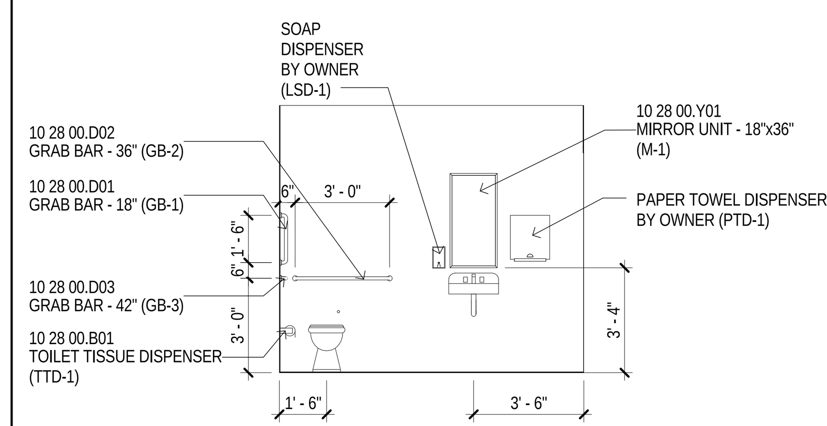

4 ST. TLT HC112
1/4" = 1'-0"
A332

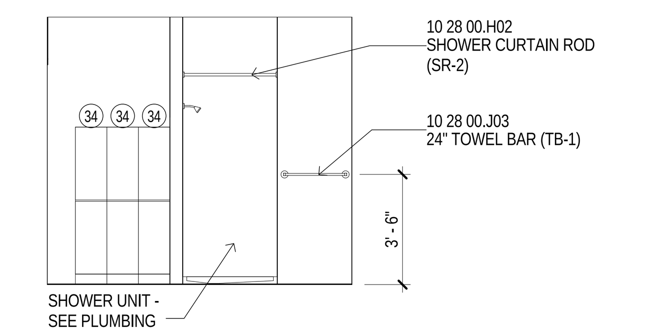

5 ST. TLT HC112
1/4" = 1'-0"

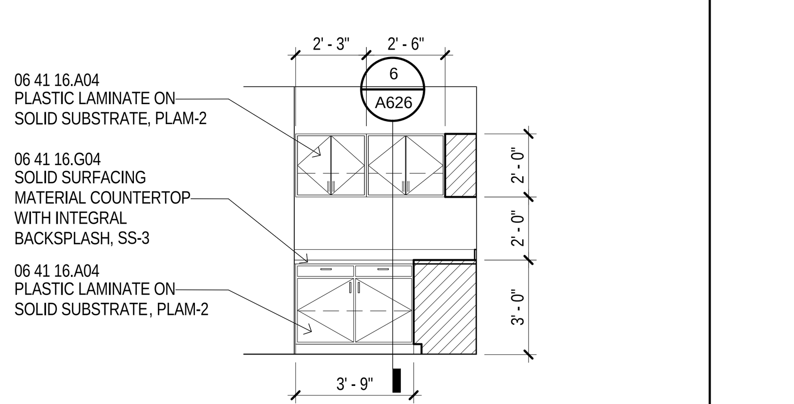

6 WORK HC113
1/4" = 1'-0"
A332

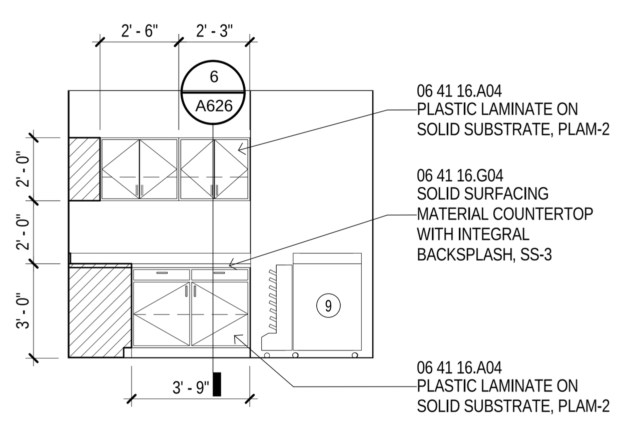

7 WORK HC113
1/4" = 1'-0"
A332

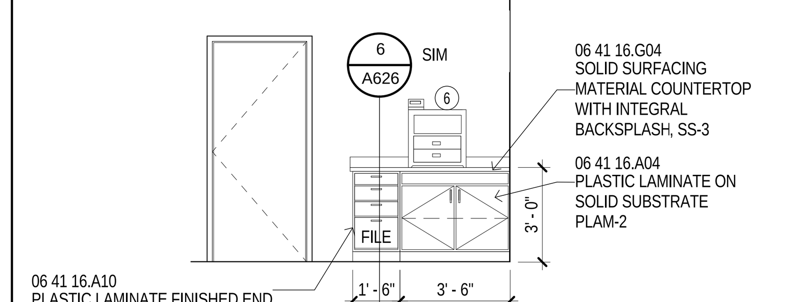

8 WORK HC 113
1/4" = 1'-0"
A332

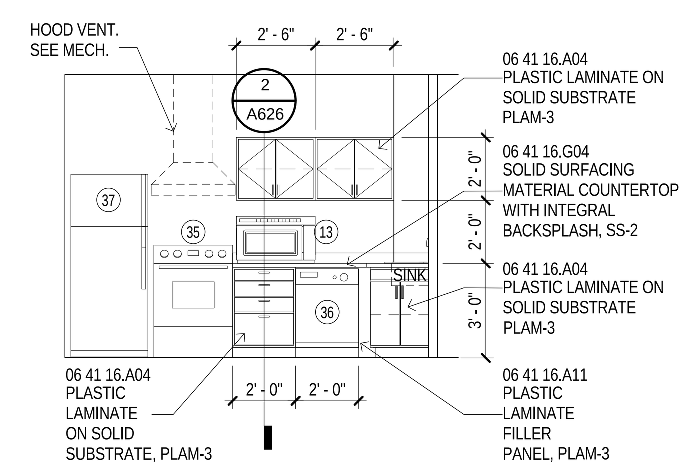

9 STAFF LOUNGE HC116
1/4" = 1'-0"
A101A

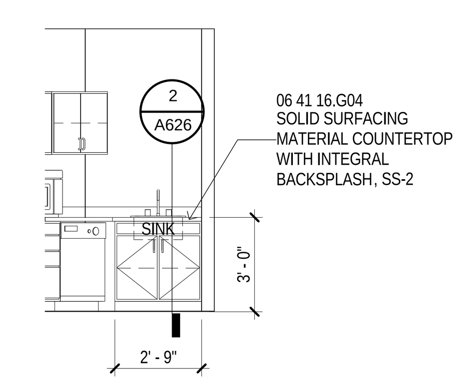

10 STAFF LOUNGE HC116
1/4" = 1'-0"

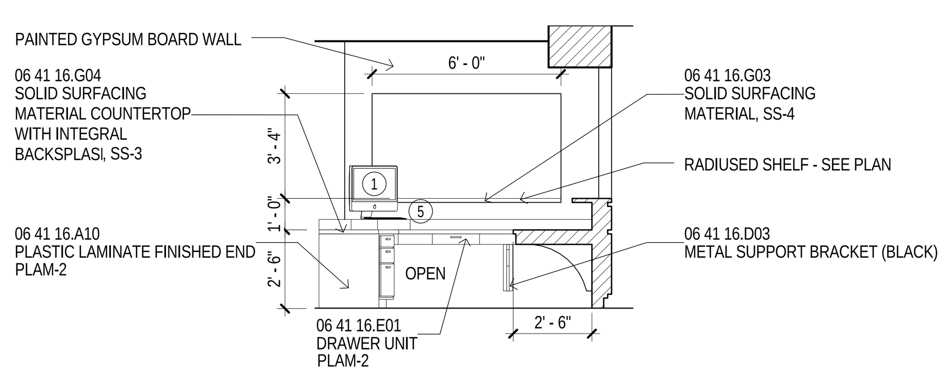

11 RECEPTION HC121
1/4" = 1'-0"
A101A

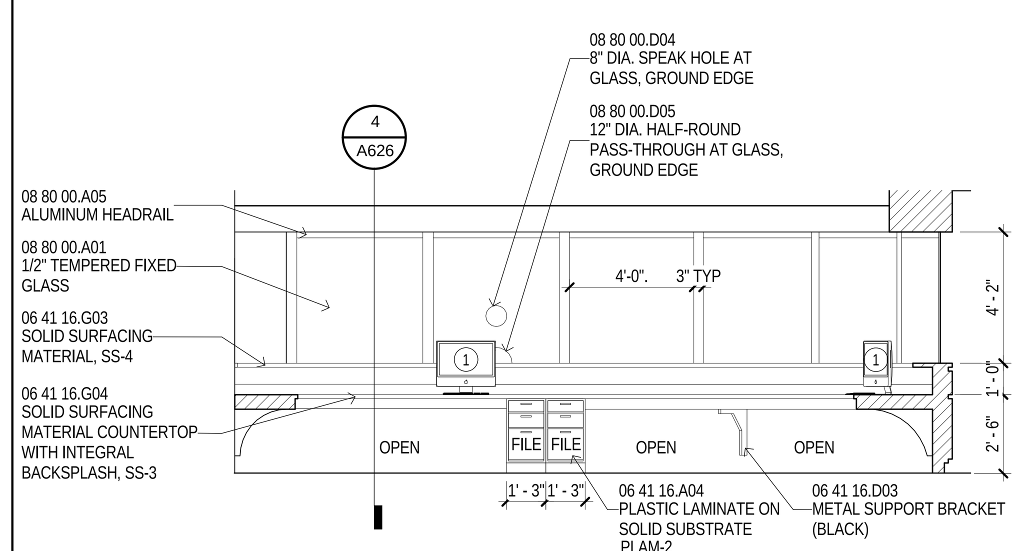

12 RECEPTION HC121
1/4" = 1'-0"
A101A

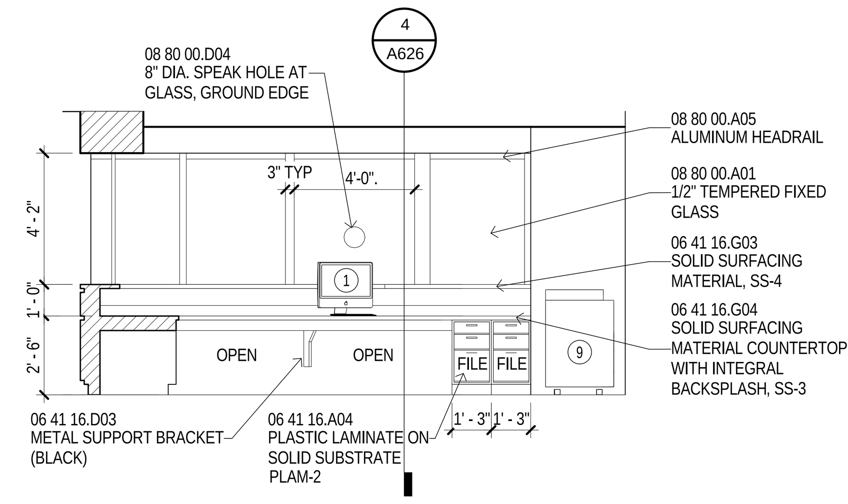

13 RECEPTION HC121
1/4" = 1'-0"
A101A

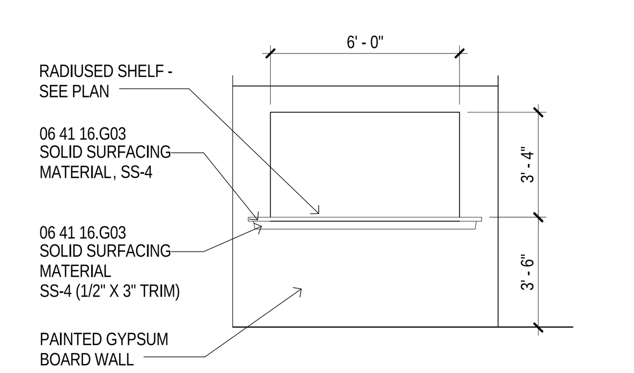

14 RECEPTION HC121
1/4" = 1'-0"
A101A

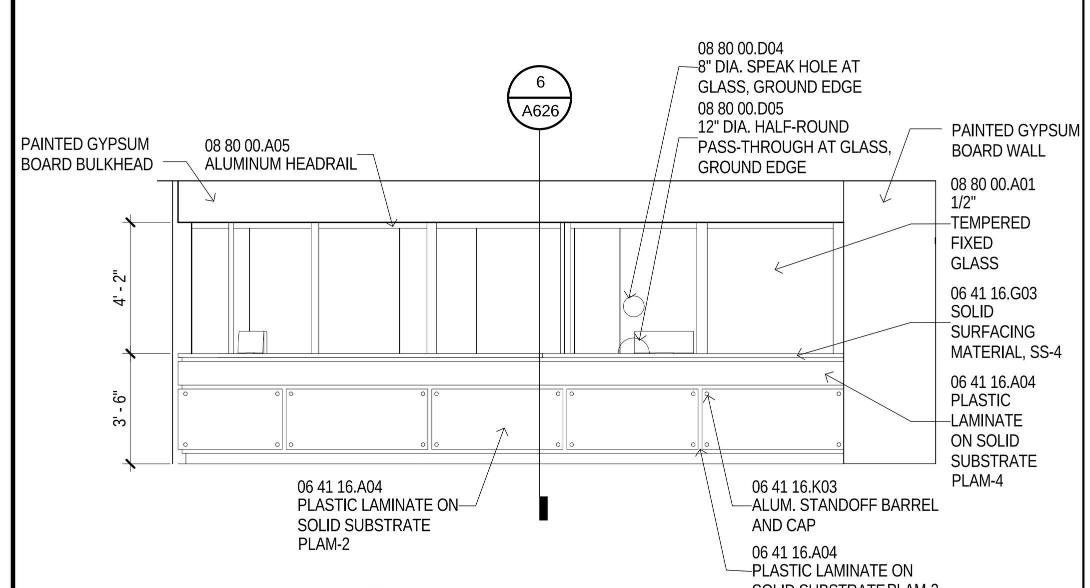

15 RECEPTION HC121
1/4" = 1'-0"
A101A

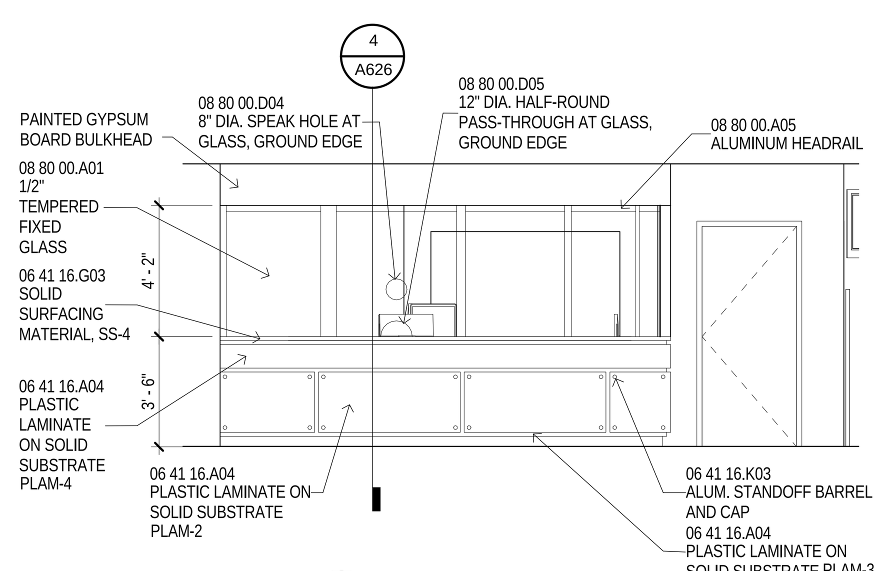

16 RECEPTION HC121
1/4" = 1'-0"
A101A

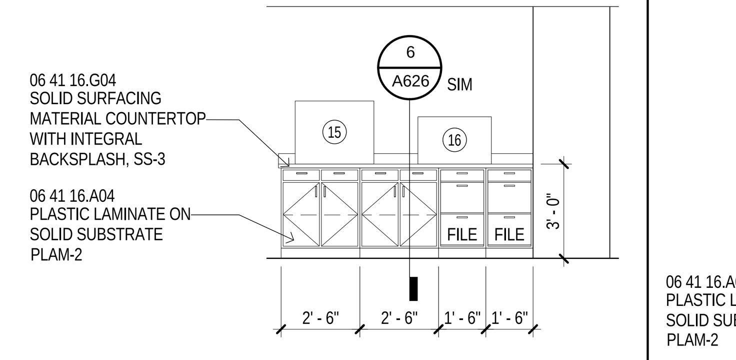

17 LAB HC122
1/4" = 1'-0"
A331

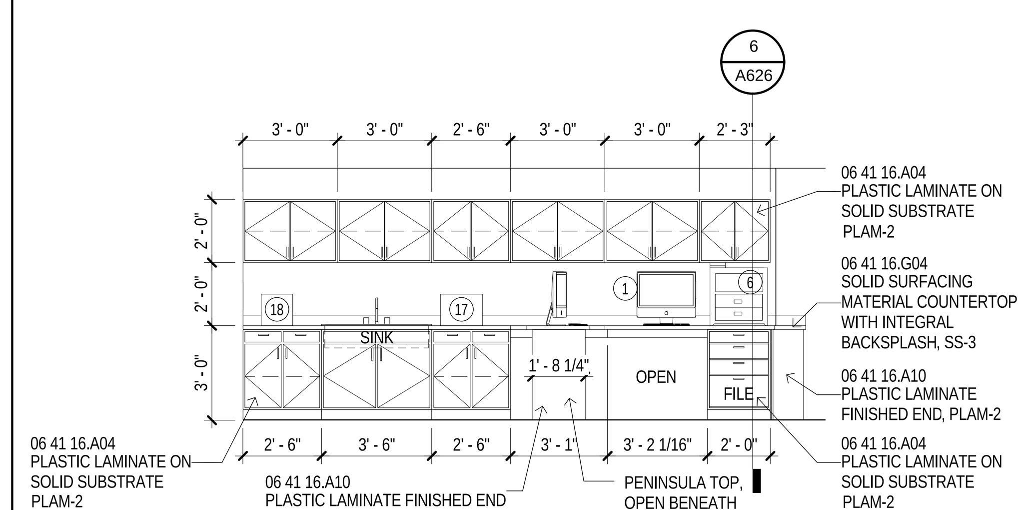

18 LAB HC122
1/4" = 1'-0"
A331

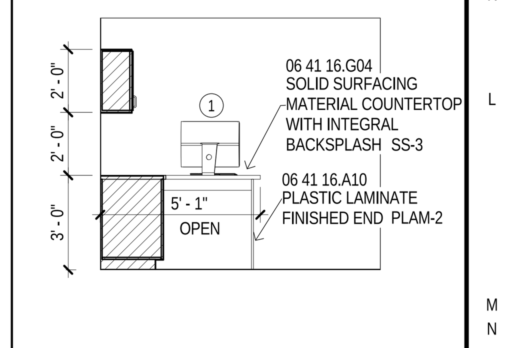

19 LAB HC122
1/4" = 1'-0"

MATERIAL KEYING

06 41 16.A02	PLASTIC-LAMINATE COUNTERTOP W/ INTEGRAL BACKSPLASH
06 41 16.A04	PLASTIC LAMINATE ON SOLID SUBSTRATE
06 41 16.A10	PLASTIC LAMINATE FINISHED END
06 41 16.A11	PLASTIC LAMINATE FILLER PANEL
06 41 16.D03	METAL SUPPORT BRACKET (BLACK)
06 41 16.E01	DRAWER UNIT
06 41 16.G03	SOLID SURFACING MATERIAL
06 41 16.G04	SOLID SURFACING MATERIAL COUNTERTOP WITH INTEGRAL BACKSPLASH
06 41 16.K03	ALUM. STANDOFF BARREL AND CAP
08 80 00.A01	1/2" TEMPERED FIXED GLASS
08 80 00.A05	ALUMINUM HEADRAIL
08 80 00.D04	8" DIA. SPEAK HOLE AT GLASS, GROUND EDGE
08 80 00.D05	12" DIA. HALF-ROUND PASS-THROUGH AT GLASS, GROUND EDGE
10 28 00.B01	TOILET TISSUE DISPENSER (TTD-1)
10 28 00.D01	GRAB BAR - 18" (GB-1)
10 28 00.D02	GRAB BAR - 36" (GB-2)
10 28 00.D03	GRAB BAR - 42" (GB-3)
10 28 00.H02	SHOWER CURTAIN ROD (SR-2)
10 28 00.J03	24" TOWEL BAR (TB-1)
10 28 00.Y01	MIRROR UNIT - 18"x36" (M-1)

EQUIPMENT SCHEDULE

MARK	TYPE	PROVIDE	INSTALL	ROUGH-IN
1	Computer - Desktop	OWNER	OWNER	GC
2	Computer - Thin Client	OWNER	OWNER	GC
3	Wall-Mounted Television	OWNER	OWNER	GC
4	Full-Size Drug Refrigerator	OWNER	OWNER	GC
5	Cash Register Drawer	OWNER	OWNER	GC
6	Printer - Desktop	OWNER	OWNER	GC
7	Printer - Floor	OWNER	OWNER	GC
8	Scanner / Copier	OWNER	OWNER	GC
9	Copier / Printer	OWNER	OWNER	GC
10	Meds Cabinet	OWNER	GC	GC
11	Scale	OWNER	OWNER	N/A
12	File Cabinet	OWNER	OWNER	N/A
13	Microwave	OWNER	OWNER	GC
15	Centrifuge - Countertop	OWNER	OWNER	GC
16	Cell Dyn - Countertop	OWNER	OWNER	GC
17	Small Centrifuge	OWNER	OWNER	GC
18	Urine Analyzer	OWNER	OWNER	GC
19	Phlebotomy Chair	OWNER	OWNER	N/A
20	Supply Cart	OWNER	OWNER	N/A
21	Ice Machine - Floor	OWNER	OWNER	GC
22	Exam / Dental Chair	OWNER	OWNER	GC
23	Dental Cart	OWNER	OWNER	GC
24	Autoclave - Counter	OWNER	OWNER	GC
25	Sonic Washer - Counter	OWNER	OWNER	GC
26	X-Ray Table	OWNER	VENDOR	GC
27	X-Ray Chest Bucky	OWNER	VENDOR	GC
28	X-Ray Control Panel	OWNER	VENDOR	GC
29	X-Ray Power Supply	OWNER	VENDOR	GC
30	X-Ray Scanner / Burner	OWNER	OWNER	GC
31	Exam Table	OWNER	OWNER	N/A
32	Exam Console	OWNER	OWNER	N/A
33	EKG Machine - Cart	OWNER	OWNER	N/A
34	Dbl Stacked Lockers 12W	OWNER	OWNER	N/A
35	Oven / Range	OWNER	GC	GC
36	Dishwasher	OWNER	GC	GC
37	Refrigerator / Freezer	OWNER	OWNER	GC
38	Sharps Container	OWNER	OWNER	N/A
39	Time Clock	OWNER	OWNER	GC

GENERAL NOTES

A UNLESS SPECIFICALLY NOTED OTHERWISE - INTERIOR DIMENSIONS ARE TO FACE OF STUD, FACE OF CMU OR FACE OF CONCRETE WHERE INDICATED. WHERE FACE OF FINISH OR CLEAR DIMENSIONS ARE INDICATED FOR COORDINATION PURPOSES OR TO DESIGNATE REQUIRED CODE CLEARANCES, THE DIMENSION IS TYPICALLY DESIGNATED AS "FOF" (FACE OF FINISH) OR "CLEAR".

B CONTRACTOR RESPONSIBLE FOR FIELD MEASUREMENTS ON OVERALL DIMENSIONS.

C ROUGH-IN AND CLEARANCE DIMENSIONS, BLOCKING AND ANCHORAGE FOR SHOWER UNITS, (AS WELL AS LAUNDRY EQUIPMENT, APPLIANCES, AND SIMILAR BUILT-IN OR DIMENSIONALLY CRITICAL ITEMS) IS TO BE PROVIDED PER THE MANUFACTURER'S WRITTEN INSTALLATION INSTRUCTIONS.

D DIMENSIONS INDICATED AT SHOWER FIXTURES ARE APPROXIMATE. PRIOR TO BEGINNING PARTITION LAYOUT WORK OBTAIN ACTUAL SAMPLES OF EACH PREFABRICATED SHOWER ENCLOSURE AND CONSTRUCT MOCK-UPS OF EACH TYPICAL CONDITION TO ESTABLISH EXACT ROUGH-IN DIMENSIONS AND FRAMING, BLOCKING AND FINISH DETAILS.

E SHOWER UNITS SHALL BE GROUTED SOLID UNDERNEATH - FILL VOID BETWEEN FLOOR SLAB AND FLOOR OF SHOWER.

F DWELLING UNITS DESIGNATED AS "HC" ON THE PLANS ARE UNITS WITH MOBILITY FEATURES IN ACCORDANCE WITH APPLICABLE ACCESSIBILITY CODES. ROOMS NOTED "HC-R" ARE PROVIDED WITH ROLL-IN TYPE SHOWER ENCLOSURESS. ROOMS NOTED AS "HC-T" ARE PROVIDED WITH TRANSFER TYPE SHOWER ENCLOSURES. UNITS DESIGNATED WITH "C" ARE UNITS TO BE PROVIDED WITH COMMUNICATIONS FEATURES.

G ALL DWELLING UNITS NOT DESIGNATED AS "HC" ARE TO BE CONSTRUCTED AS "TYPE B" UNITS PER CHAPTER 11 OF ICC AND APPLICABLE PROVISIONS OF ICC/ANSI A117.1 AND THE FAIR HOUSING ACT DESIGN MANUAL.

H EXCEPT AS NOTED OTHERWISE, LAUNDRY EQUIPMENT AND RESIDENTIAL APPLIANCES ARE NOT IN CONTRACT (NIC) - LAUNDRY EQUIPMENT WILL BE FURNISHED AND INSTALLED BY THE OWNER'S SEPARATE LAUNDRY CONTRACTOR (WITH THE EXCEPTION OF STAFF APARTMENT LAUNDRY EQUIPMENT). RESIDENTIAL KITCHEN EQUIPMENT (WITH THE EXCEPTION OF WALL OVENS AND RANGE HOODS) WILL BE OWNER FURNISHED AND CONTRACTOR INSTALLED. PROVIDE ROUGH-IN FOR LAUNDRY EQUIPMENT AND RESIDENTIAL KITCHEN APPLIANCES. REFER TO ELECTRICAL DRAWINGS FOR POWER AND DATA - REFER TO PLUMBING DRAWINGS FOR GAS, WATER AND DRAINAGE - REFER TO MECHANICAL DRAWING FOR EXHAUSTING AS APPLICABLE. COORDINATE ROUGH-IN REQUIREMENTS WITH THE OWNER AND OBTAIN MANUFACTURER'S REQUIREMENTS PRIOR TO COMMENCEMENT OF ROUGH-IN WORK.

I LOCATE WHEELCHAIR ACCESSIBLE WATER CLOSETS 17" FROM CENTERLINE OF WATER CLOSET TO FACE OF FINISH AT ADJACENT WALL, TYPICAL. FLUSH HANDLES TO BE LOCATED ON THE WIDE (OPEN) SIDE OF THE FIXTURE, TYPICAL.

J PROVIDE FLOOR DRAINS (FD) AT ROLL-IN (R) AND TRANSFER (T) SHOWERS. REFER TO PLUMBING DRAWINGS, SLOPE FLOORS TO DRAIN.

K WHERE NOTED AT HANDICAP ACCESSIBLE DWELLING UNITS, PROVIDE REMOVABLE BASE CABINETS AT KITCHEN AND BATHROOM SINKS COMPLYING WITH THE REQUIREMENTS OF ADA STANDARDS FOR ACCESSIBLE DESIGN (SECTION 606.2 EXCEPTION NO. 3).

L CONTRACTOR TO PROVIDE 12 GAGE METAL BLOCKING IN STUD WALLS FOR ANCHORAGE OF WALL MOUNTED ITEMS INCLUDING BUT NOT LIMITED TO TOILET ACCESSORIES, WALL CABINETS, WALL MOUNTED TV'S, SHELVING, TOILET PARTITIONS, OWNER FURNISHED EQUIPMENT INDICATED AND SIMILAR ITEMS. FOR "TYPE B" DWELLING UNITS, PROVIDE METAL BLOCKING IN WALLS FOR FUTURE INSTALLATIONS AS INDICATED. FOR WALL MOUNTED TV'S IN LOUNGES, PROVIDE METAL BLOCKING 24" ABOVE AND BELOW ELECTRICAL JUNCTION BOXES.

M REFER TO A026 FOR DESCRIPTION OF ALL PARTITION TYPES.

N REFER TO A100 (1/8" FLOOR PLANS) SERIES DRAWINGS AND A300 SERIES DRAWINGS (ENLARGED PLANS) FOR PARTITION TYPE LOCATIONS.

O REFER TO LS SERIES DRAWING (LIFE SAFETY PLANS) FOR LOCATIONS OF FIRE RATED WALLS AND PARTITIONS.

P REFER TO A000 SERIES DRAWINGS FOR WINDOW TYPES AND DOOR TYPES, SCHEDULES AND DETAILS.

Q REFER TO A000 SERIES DRAWINGS FOR INTERIOR FINISH SCHEDULES.

R REFER TO A100 SERIES DRAWINGS (ENLARGED PLANS) FOR ADDITIONAL PLAN NOTES.

S REFER TO PROJECT MANUAL SECTION 10 28 00 FOR TOILET ACCESSORY SCHEDULE.

REGISTERED ARCHITECT Thomas D. Saunders 3693 Tupelo, MS STATE OF MISSISSIPPI
04 march 2013

THE McCARTY COMPANY
DESIGN GROUP, P.A.
OFFICE ADDRESS: 533 WEST MAIN STREET TUPELO, MS 38804
TELEPHONE: (662) 844-4400 FAX: (662) 844-0500
MAILING ADDRESS: P.O. BOX 440 TUPELO, MS 38802

DESIGN ARCHITECT
Hanbury Evans Wright Vlattas + Company
120 Atlantic Street
Norfolk, VA 23510
757.321.9600
www.hewv.com

PROJECT TITLE
USM - CENTURY PARK SOUTH
IHL# 208-297
HATTIESBURG, MISSISSIPPI

THE UNIVERSITY OF SOUTHERN MISSISSIPPI

PROJECT NO: 2012020
DRAWN BY: JCF
CHECKED BY: JPH
DATE ISSUED: 04 MAR 2013

REVISIONS & ADDENDUMS

SHEET TITLE
BUILDING A - INTERIOR ELEVATIONS - HEALTH CLINIC

SHEET NUMBER
A611

Plot Date: BID DOCUMENTS - 04 MARCH 2013

3/11/2013 4:54:35 AM

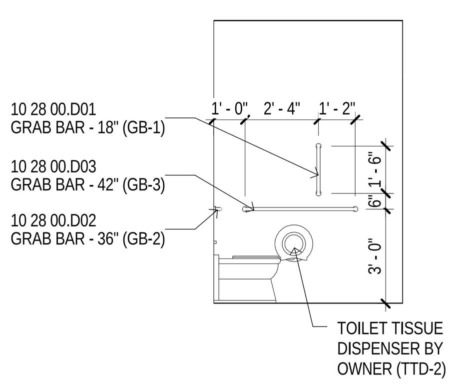

1 TLT HC124A
1/4" = 1'-0"

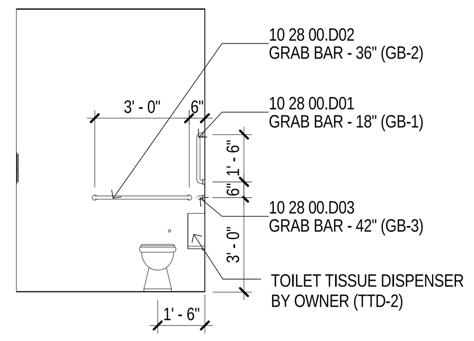

2 TLT HC124A
1/4" = 1'-0"

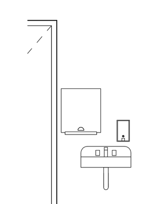

3 EI_TLT HC124A @ CORR. HC 160
1/4" = 1'-0"

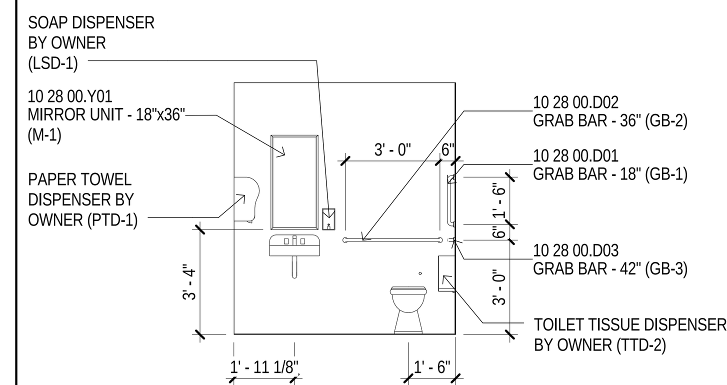

4 TLT HC127
1/4" = 1'-0"

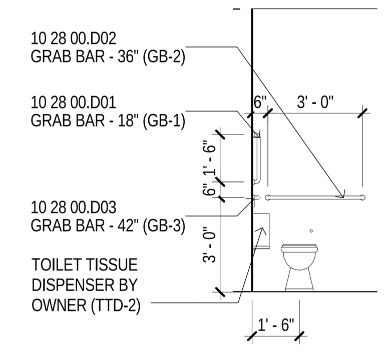

5 TLT HC128
1/4" = 1'-0"
A332

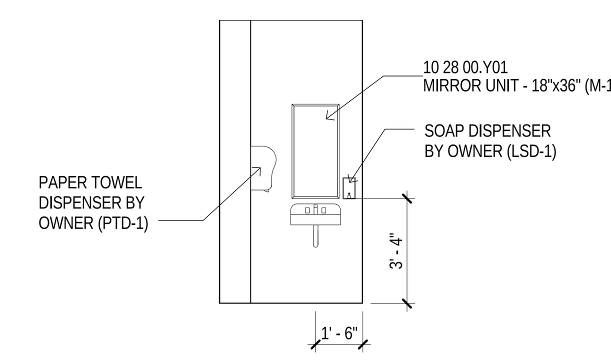

6 TLT HC128
1/4" = 1'-0"
A332

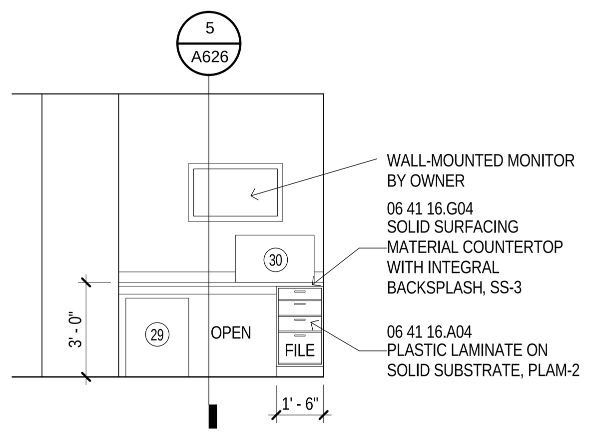

7 X-RAY HC132
1/4" = 1'-0"
A332

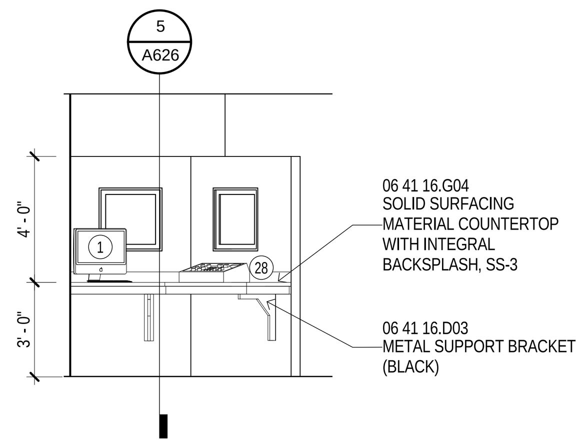

8 X-RAY HC132
1/4" = 1'-0"
A332

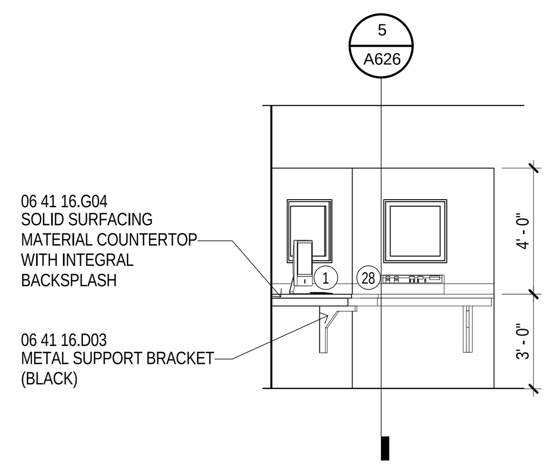

9 X-RAY HC132
1/4" = 1'-0"
A332

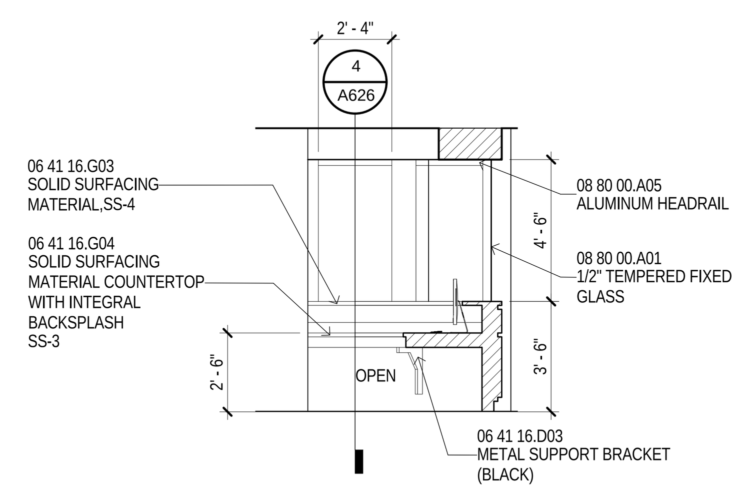

10 NRS / SUPPLY HC136
1/4" = 1'-0"
A331

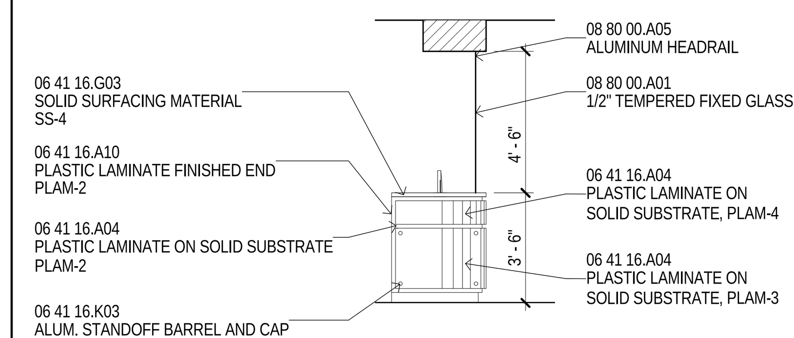

11 NRS / SUPPLY HC136
1/4" = 1'-0"
A331

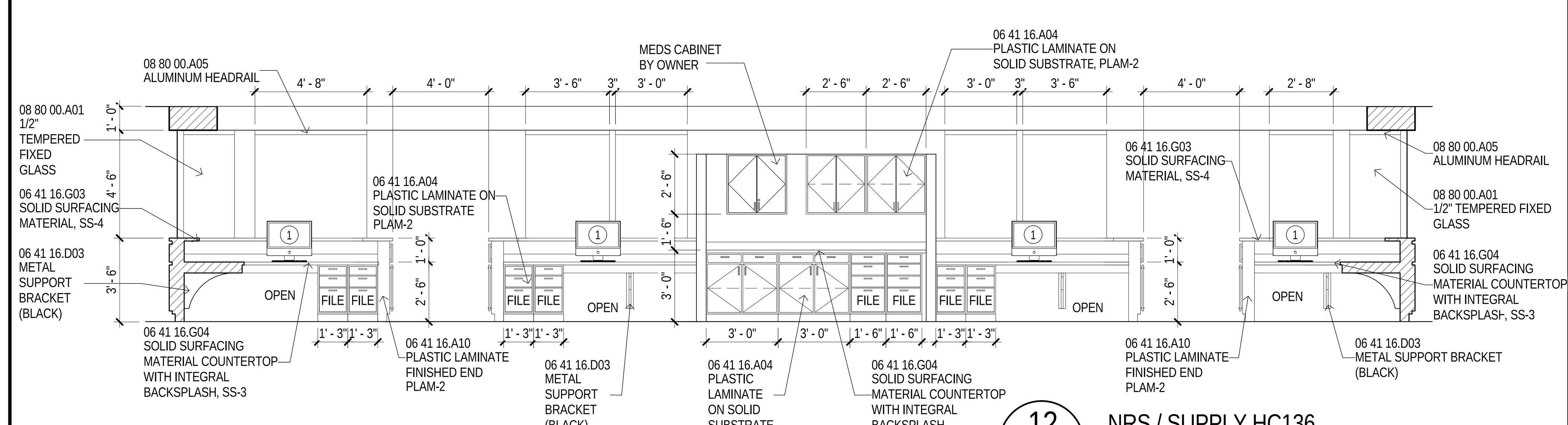

12 NRS / SUPPLY HC136
1/4" = 1'-0"
A331

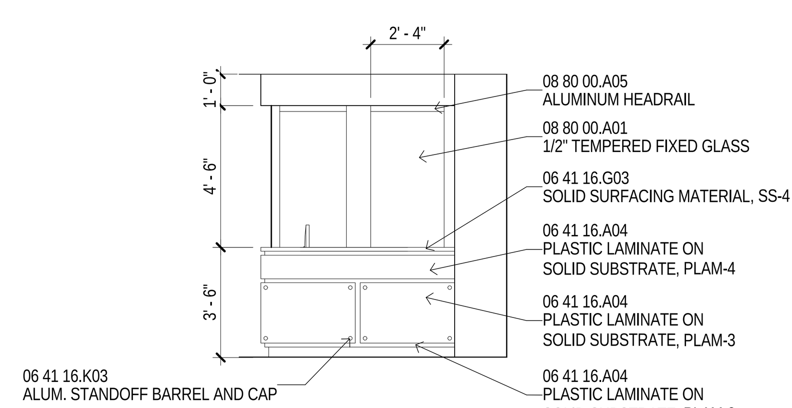

13 NRS / SUPPLY HC136
1/4" = 1'-0"
A331

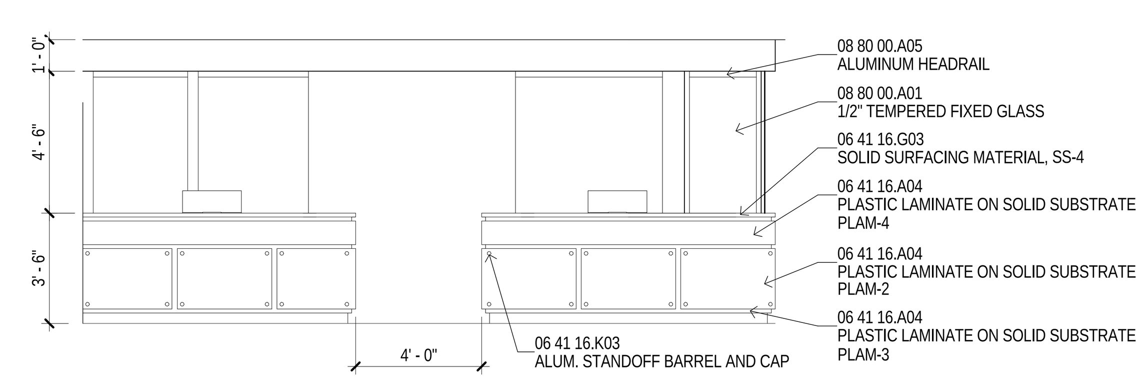

14 NRS / SUPPLY HC136
1/4" = 1'-0"
A331

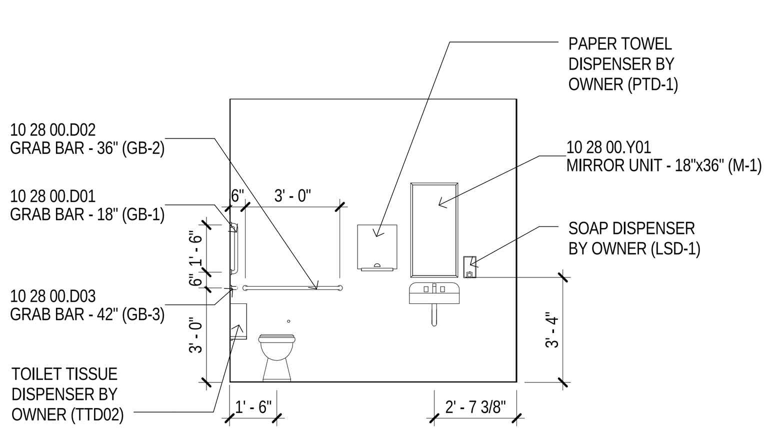

15 TLT HC145
1/4" = 1'-0"
A332

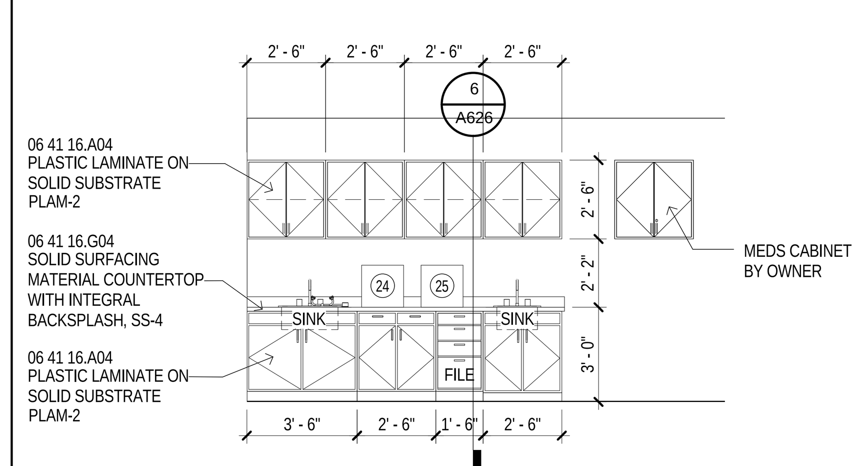

16 PROCEDURE HC148
1/4" = 1'-0"

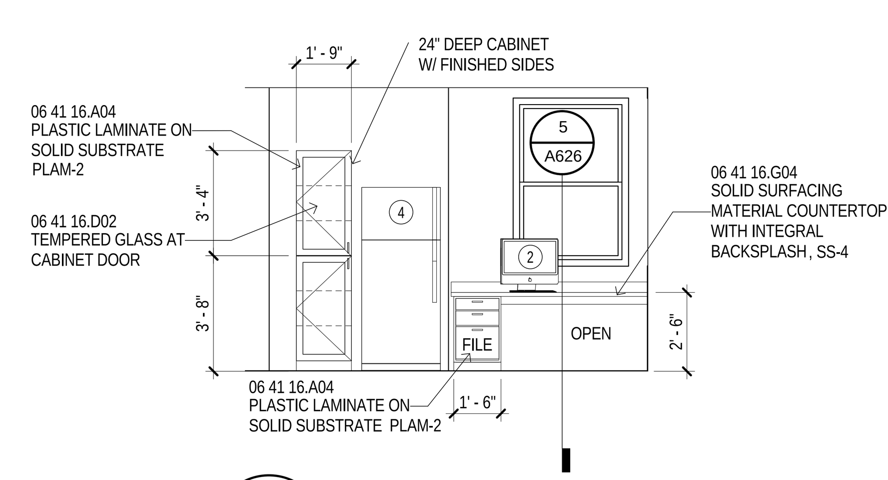

17 PROCEDURE HC148
1/4" = 1'-0"

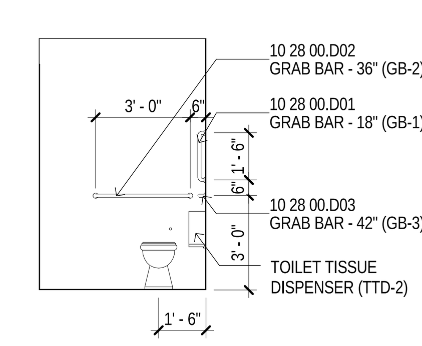

18 TLT HC148A
1/4" = 1'-0"
A332

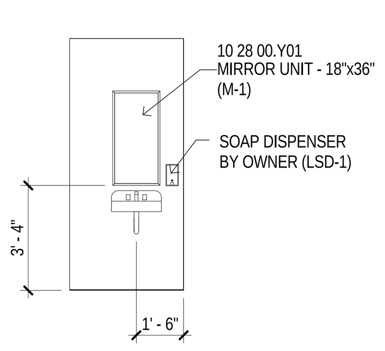

19 TLT HC148A
1/4" = 1'-0"
A332

MATERIAL KEYING

06 41 16.A04	PLASTIC LAMINATE ON SOLID SUBSTRATE
06 41 16.A10	PLASTIC LAMINATE FINISHED END
06 41 16.D02	TEMPERED GLASS AT CABINET DOOR
06 41 16.D03	METAL SUPPORT BRACKET (BLACK)
06 41 16.G03	SOLID SURFACING MATERIAL
06 41 16.G04	SOLID SURFACING MATERIAL COUNTERTOP WITH INTEGRAL BACKSPLASH
06 41 16.K03	ALUM. STANDOFF BARREL AND CAP
08 80 00.A01	1/2" TEMPERED FIXED GLASS
08 80 00.A05	ALUMINUM HEADRAIL
10 28 00.D01	GRAB BAR - 18" (GB-1)
10 28 00.D02	GRAB BAR - 36" (GB-2)
10 28 00.D03	GRAB BAR - 42" (GB-3)
10 28 00.Y01	MIRROR UNIT - 18"x36" (M-1)

EQUIPMENT SCHEDULE

MARK	TYPE	PROVIDE	INSTALL	ROUGH-IN
1	Computer - Desktop	OWNER	OWNER	GC
2	Computer - Thin Client	OWNER	OWNER	GC
3	Wall-Mounted Television	OWNER	OWNER	GC
4	Full-Size Drug Refrigerator	OWNER	OWNER	GC
5	Cash Register Drawer	OWNER	OWNER	GC
6	Printer - Desktop	OWNER	OWNER	GC
7	Printer - Floor	OWNER	OWNER	GC
8	Scanner / Copier	OWNER	OWNER	GC
9	Copier / Printer	OWNER	OWNER	GC
10	Meds Cabinet	OWNER	GC	GC
11	Scale	OWNER	OWNER	N/A
12	File Cabinet	OWNER	OWNER	N/A
13	Microwave	OWNER	OWNER	GC
15	Centrifuge - Countertop	OWNER	OWNER	GC
16	Cell Dyn - Countertop	OWNER	OWNER	GC
17	Small Centrifuge	OWNER	OWNER	GC
18	Urine Analyzer	OWNER	OWNER	GC
19	Phlebotomy Chair	OWNER	OWNER	N/A
20	Supply Cart	OWNER	OWNER	N/A
21	Ice Machine - Floor	OWNER	OWNER	GC
22	Exam / Dental Chair	OWNER	OWNER	GC
23	Dental Cart	OWNER	OWNER	GC
24	Autoclave - Counter	OWNER	OWNER	GC
25	Sonic Washer - Counter	OWNER	OWNER	GC
26	X-Ray Table	OWNER	VENDOR	GC
27	X-Ray Chest Bucky	OWNER	VENDOR	GC
28	X-Ray Control Panel	OWNER	VENDOR	GC
29	X-Ray Power Supply	OWNER	VENDOR	GC
30	X-Ray Scanner / Burner	OWNER	OWNER	GC
31	Exam Table	OWNER	OWNER	N/A
32	Exam Console	OWNER	OWNER	N/A
33	EKG Machine - Cart	OWNER	OWNER	N/A
34	Dbl Stacked Lockers 12W	OWNER	OWNER	N/A
35	Oven / Range	OWNER	GC	GC
36	Dishwasher	OWNER	GC	GC
37	Refrigerator / Freezer	OWNER	OWNER	GC
38	Sharps Container	OWNER	OWNER	N/A
39	Time Clock	OWNER	OWNER	GC

GENERAL NOTES

A UNLESS SPECIFICALLY NOTED OTHERWISE - INTERIOR DIMENSIONS ARE TO FACE OF STUD, FACE OF CMU OR FACE OF CONCRETE WHERE INDICATED. WHERE FACE OF FINISH OR CLEAR DIMENSIONS ARE INDICATED FOR COORDINATION PURPOSES OR TO DESIGNATE REQUIRED CODE CLEARANCES, THE DIMENSION IS TYPICALLY DESIGNATED AS "FOF" (FACE OF FINISH) OR "CLEAR".

B CONTRACTOR RESPONSIBLE FOR FIELD MEASUREMENTS ON OVERALL DIMENSIONS.

C ROUGH-IN AND CLEARANCE DIMENSIONS, BLOCKING AND ANCHORAGE FOR SHOWER UNITS, (AS WELL AS LAUNDRY EQUIPMENT, APPLIANCES, AND SIMILAR BUILT-IN OR DIMENSIONALLY CRITICAL ITEMS) IS TO BE PROVIDED PER THE MANUFACTURER'S WRITTEN INSTALLATION INSTRUCTIONS.

D DIMENSIONS INDICATED AT SHOWER FIXTURES ARE APPROXIMATE. PRIOR TO BEGINNING PARTITION LAYOUT WORK OBTAIN ACTUAL SAMPLES OF EACH PREFABRICATED SHOWER ENCLOSURE AND CONSTRUCT MOCK-UPS OF EACH TYPICAL CONDITION TO ESTABLISH EXACT ROUGH-IN DIMENSIONS AND FRAMING, BLOCKING AND FINISH DETAILS.

E SHOWER UNITS SHALL BE GROUTED SOLID UNDERNEATH - FILL VOID BETWEEN FLOOR SLAB AND FLOOR OF SHOWER.

F DWELLING UNITS DESIGNATED AS "HC" ON THE PLANS ARE UNITS WITH MOBILITY FEATURES IN ACCORDANCE WITH APPLICABLE ACCESSIBILITY CODES. ROOMS NOTED "HC-R" ARE PROVIDED WITH ROLL-IN TYPE SHOWER ENCLOSURESS. ROOMS NOTED AS "HC-T" ARE PROVIDED WITH TRANSFER TYPE SHOWER ENCLOSURES. UNITS DESIGNATED WITH "C" ARE UNITS TO BE PROVIDED WITH COMMUNICATIONS FEATURES.

G ALL DWELLING UNITS NOT DESIGNATED AS "HC" ARE TO BE CONSTRUCTED AS "TYPE B" UNITS PER CHAPTER 11 OF ICC AND APPLICABLE PROVISIONS OF ICC/ANSI A117.1 AND THE FAIR HOUSING ACT DESIGN MANUAL.

H EXCEPT AS NOTED OTHERWISE, LAUNDRY EQUIPMENT AND RESIDENTIAL APPLIANCES ARE NOT IN CONTRACT (NIC) - LAUNDRY EQUIPMENT WILL BE FURNISHED AND INSTALLED BY THE OWNER'S SEPARATE LAUNDRY CONTRACTOR (WITH THE EXCEPTION OF STAFF APARTMENT LAUNDRY EQUIPMENT). RESIDENTIAL KITCHEN EQUIPMENT (WITH THE EXCEPTION OF WALL OVENS AND RANGE HOODS) WILL BE OWNER FURNISHED AND CONTRACTOR INSTALLED. PROVIDE ROUGH-IN FOR LAUNDRY EQUIPMENT AND RESIDENTIAL KITCHEN APPLIANCES. REFER TO ELECTRICAL DRAWINGS FOR POWER AND DATA - REFER TO PLUMBING DRAWINGS FOR GAS, WATER AND DRAINAGE - REFER TO MECHANICAL DRAWING FOR EXHAUSTING AS APPLICABLE. COORDINATE ROUGH-IN REQUIREMENTS WITH THE OWNER AND OBTAIN MANUFACTURER'S REQUIREMENTS PRIOR TO COMMENCEMENT OF ROUGH-IN WORK.

I LOCATE WHEELCHAIR ACCESSIBLE WATER CLOSETS 17" FROM CENTERLINE OF WATER CLOSET TO FACE OF FINISH AT ADJACENT WALL, TYPICAL. FLUSH HANDLES TO BE LOCATED ON THE WIDE (OPEN) SIDE OF THE FIXTURE, TYPICAL.

J PROVIDE FLOOR DRAINS (FD) AT ROLL-IN (R) AND TRANSFER (T) SHOWERS. REFER TO PLUMBING DRAWINGS, SLOPE FLOORS TO DRAIN.

K WHERE NOTED AT HANDICAP ACCESSIBLE DWELLING UNITS, PROVIDE REMOVABLE BASE CABINETS AT KITCHEN AND BATHROOM SINKS COMPLYING WITH THE REQUIREMENTS OF ADA STANDARDS FOR ACCESSIBLE DESIGN (SECTION 606.2 EXCEPTION NO. 3).

L CONTRACTOR TO PROVIDE 12 GAGE METAL BLOCKING IN STUD WALLS FOR ANCHORAGE OF WALL MOUNTED ITEMS INCLUDING BUT NOT LIMITED TO TOILET ACCESSORIES, WALL CABINETS, WALL MOUNTED TV'S, SHELVING, TOILET PARTITIONS, OWNER FURNISHED EQUIPMENT INDICATED AND SIMILAR ITEMS. FOR "TYPE B" DWELLING UNITS, PROVIDE METAL BLOCKING IN WALLS FOR FUTURE INSTALLATIONS AS INDICATED. FOR WALL MOUNTED TV'S IN LOUNGES, PROVIDE METAL BLOCKING 24" ABOVE AND BELOW ELECTRICAL JUNCTION BOXES.

M REFER TO A026 FOR DESCRIPTION OF ALL PARTITION TYPES.

N REFER TO A100 (1/8" FLOOR PLANS) SERIES DRAWINGS AND A300 SERIES DRAWINGS (ENLARGED PLANS) FOR PARTITION TYPE LOCATIONS.

O REFER TO LS SERIES DRAWING (LIFE SAFETY PLANS) FOR LOCATIONS OF FIRE RATED WALLS AND PARTITIONS.

P REFER TO A000 SERIES DRAWINGS FOR WINDOW TYPES AND DOOR TYPES, SCHEDULES AND DETAILS.

Q REFER TO A000 SERIES DRAWINGS FOR INTERIOR FINISH SCHEDULES.

R REFER TO A100 SERIES DRAWINGS (ENLARGED PLANS) FOR ADDITIONAL PLAN NOTES.

S REFER TO PROJECT MANUAL SECTION 10 28 00 FOR TOILET ACCESSORY SCHEDULE.

REGISTERED ARCHITECT
Thomas D. Saunders
3693
Tupelo, MS
STATE OF MISSISSIPPI
04 march 2013

THE McCARTY COMPANY
DESIGN GROUP, P.A.
MAILING ADDRESS:
P.O. BOX 440
TUPELO, MS 38802
OFFICE ADDRESS:
533 WEST MAIN STREET
TUPELO, MS 38804
TELEPHONE:
(662) 844-4400
FAX:
(662) 844-0500

DESIGN ARCHITECT
Hanbury Evans Wright Vlattas + Company
120 Atlantic Street
Norfolk, VA 23510
757.321.9600
www.hewv.com

PROJECT TITLE
USM - CENTURY PARK SOUTH
IHL# 208-297
HATTIESBURG, MISSISSIPPI

THE UNIVERSITY OF
SOUTHERN
MISSISSIPPI

PROJECT NO:
• 2012020
DRAWN BY:
• JCF
CHECKED BY:
• JPH
DATE ISSUED:
• 04 MAR 2013

REVISIONS & ADDENDUMS

SHEET TITLE
BUILDING A - INTERIOR ELEVATIONS - HEALTH CLINIC

SHEET NUMBER
A612

Plot Date: BID DOCUMENTS - 04 MARCH 2013

3/11/2013 4:55:03 AM

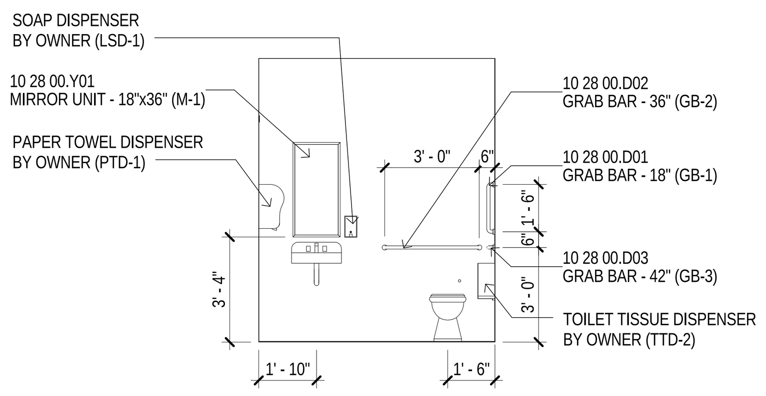

1 TLT HC154
1/4" = 1'-0"

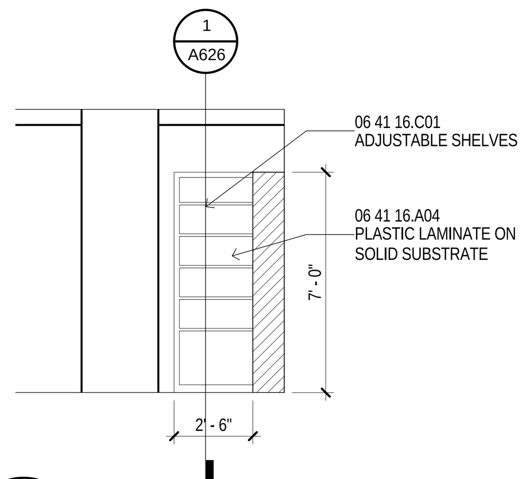

2 OTC HC156
1/4" = 1'-0"

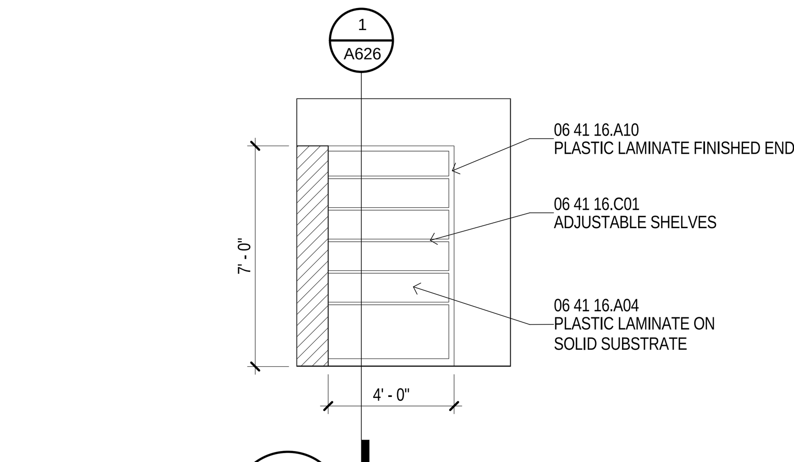

3 OTC HC156
1/4" = 1'-0"

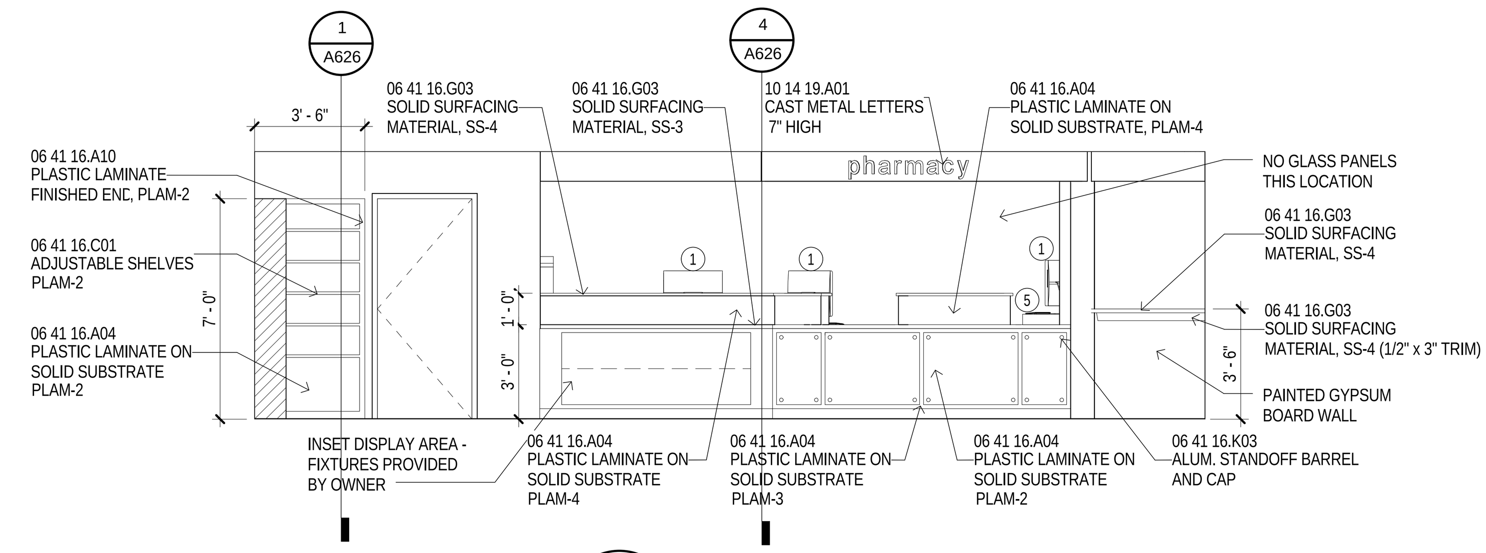

4 OTC HC156
1/4" = 1'-0"

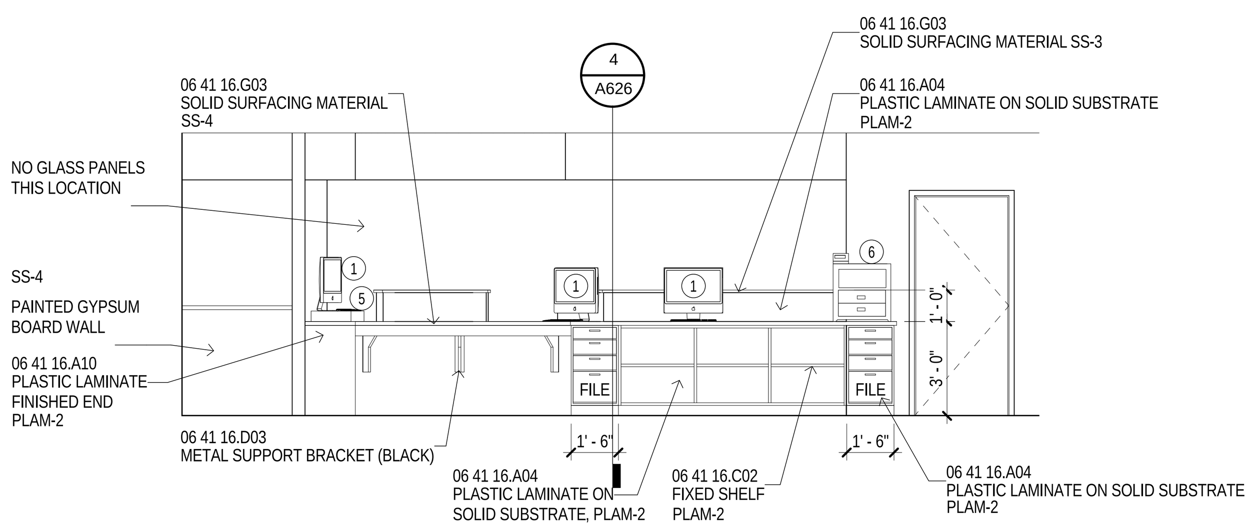

5 PHARMACY HC156A
1/4" = 1'-0"

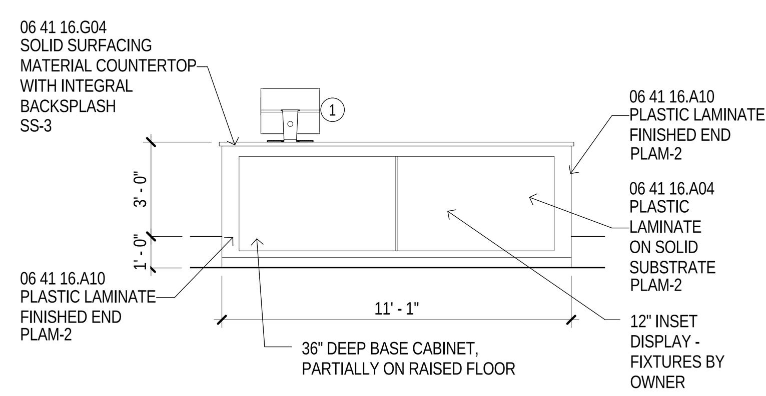

6 PHARMACY HC156A
1/4" = 1'-0"

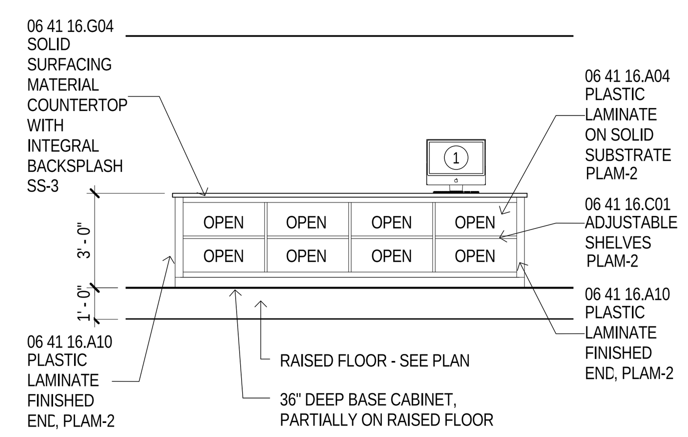

7 PHARMACY HC156A
1/4" = 1'-0"

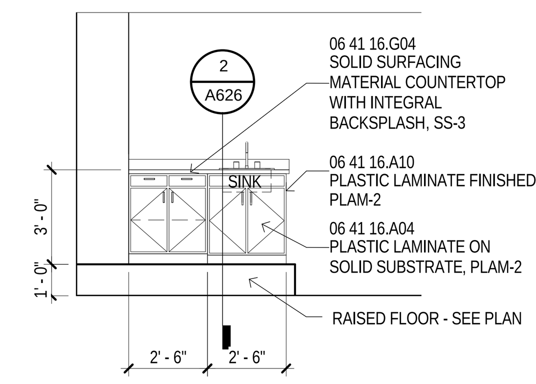

8 PHARMACY HC156A
1/4" = 1'-0"

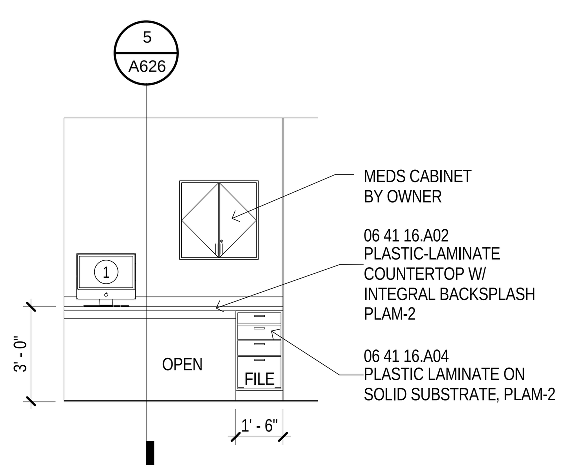

9 PHARMACY HC156A
1/4" = 1'-0"

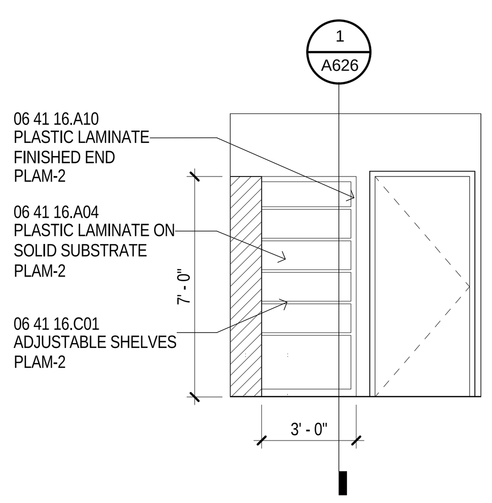

10 PHARMACY HC156A
1/4" = 1'-0"

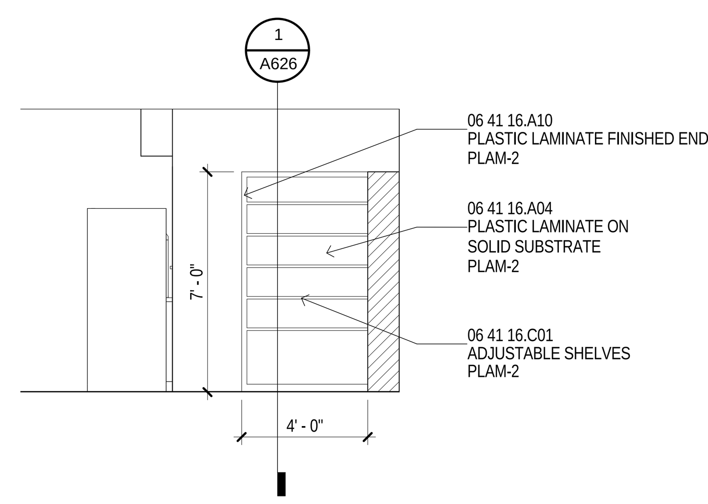

11 PHARMACY HC156A
1/4" = 1'-0"

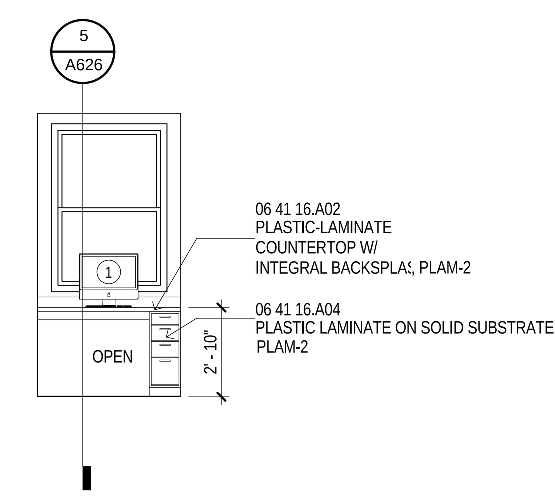

12 OFFICE HC156B
1/4" = 1'-0"
A331

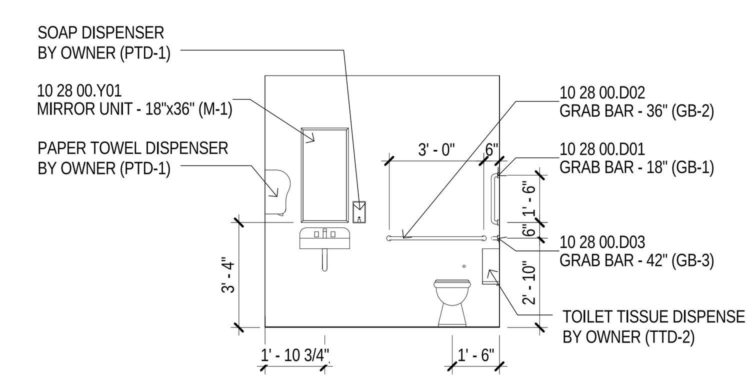

13 TLT HC156
1/4" = 1'-0"
A331

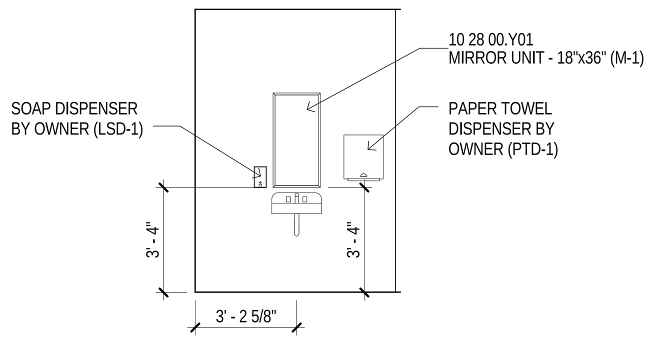

14 TLT HC164
1/4" = 1'-0"

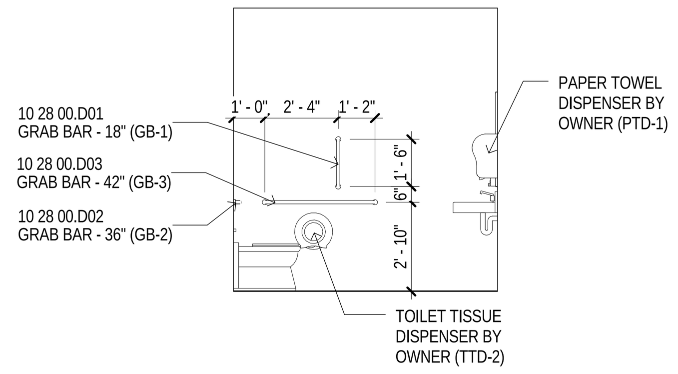

15 TLT HC164
1/4" = 1'-0"

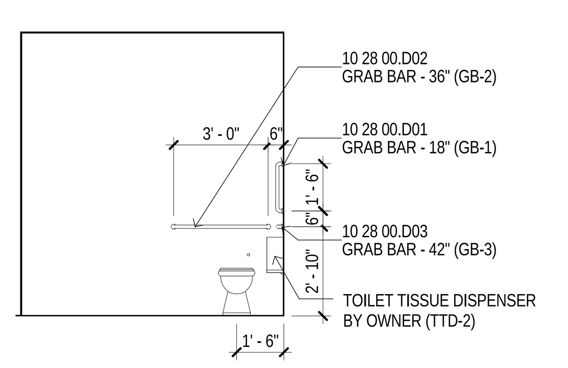

16 TLT HC164
1/4" = 1'-0"

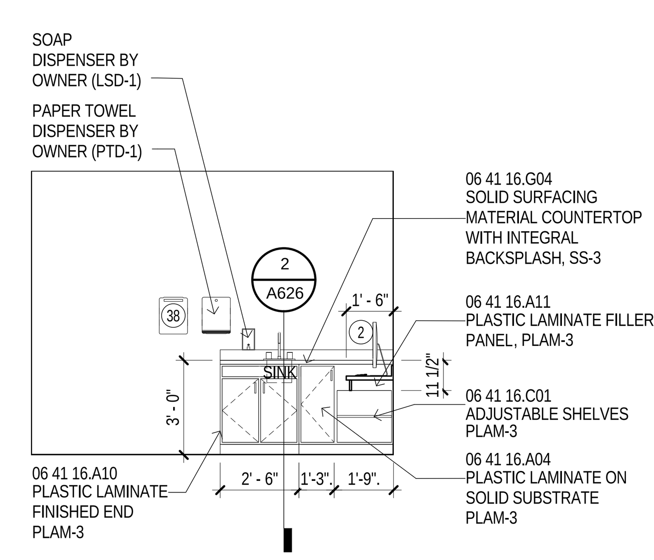

17 TYP EXAM
1/4" = 1'-0"
A332

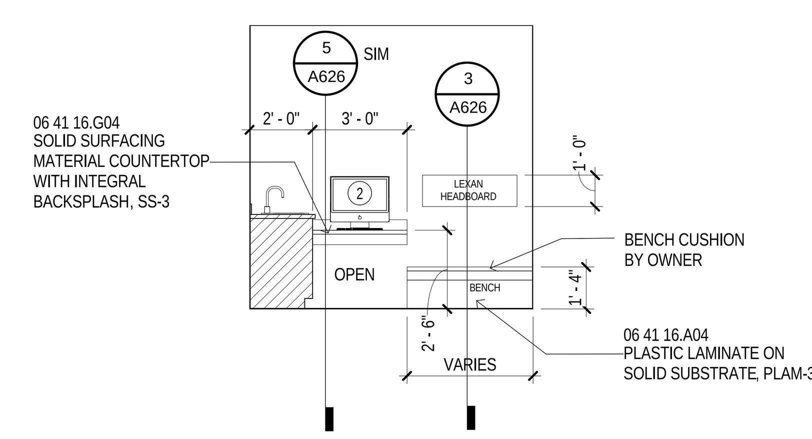

18 TYP EXAM
1/4" = 1'-0"
A332

MATERIAL KEYING

06 41 16.A02	PLASTIC-LAMINATE COUNTERTOP W/ INTEGRAL BACKSPLASH
06 41 16.A04	PLASTIC LAMINATE ON SOLID SUBSTRATE
06 41 16.A10	PLASTIC LAMINATE FINISHED END
06 41 16.A11	PLASTIC LAMINATE FILLER PANEL
06 41 16.C01	ADJUSTABLE SHELVES
06 41 16.C02	FIXED SHELF
06 41 16.D03	METAL SUPPORT BRACKET (BLACK)
06 41 16.G03	SOLID SURFACING MATERIAL
06 41 16.G04	SOLID SURFACING MATERIAL COUNTERTOP WITH INTEGRAL BACKSPLASH
06 41 16.K03	ALUM. STANDOFF BARREL AND CAP
10 14 19.A01	CAST METAL LETTERS
10 28 00.D01	GRAB BAR - 18" (GB-1)
10 28 00.D02	GRAB BAR - 36" (GB-2)
10 28 00.D03	GRAB BAR - 42" (GB-3)
10 28 00.Y01	MIRROR UNIT - 18"x36" (M-1)

EQUIPMENT SCHEDULE

MARK	TYPE	PROVIDE	INSTALL	ROUGH-IN
1	Computer - Desktop	OWNER	OWNER	GC
2	Computer - Thin Client	OWNER	OWNER	GC
3	Wall-Mounted Television	OWNER	OWNER	GC
4	Full-Size Drug Refrigerator	OWNER	OWNER	GC
5	Cash Register Drawer	OWNER	OWNER	GC
6	Printer - Desktop	OWNER	OWNER	GC
7	Printer - Floor	OWNER	OWNER	GC
8	Scanner / Copier	OWNER	OWNER	GC
9	Copier / Printer	OWNER	OWNER	GC
10	Meds Cabinet	OWNER	GC	GC
11	Scale	OWNER	OWNER	N/A
12	File Cabinet	OWNER	OWNER	N/A
13	Microwave	OWNER	OWNER	GC
15	Centrifuge - Countertop	OWNER	OWNER	GC
16	Cell Dyn - Countertop	OWNER	OWNER	GC
17	Small Centrifuge	OWNER	OWNER	GC
18	Urine Analyzer	OWNER	OWNER	GC
19	Phlebotomy Chair	OWNER	OWNER	N/A
20	Supply Cart	OWNER	OWNER	N/A
21	Ice Machine - Floor	OWNER	OWNER	GC
22	Exam / Dental Chair	OWNER	OWNER	GC
23	Dental Cart	OWNER	OWNER	GC
24	Autoclave - Counter	OWNER	OWNER	GC
25	Sonic Washer - Counter	OWNER	OWNER	GC
26	X-Ray Table	OWNER	VENDOR	GC
27	X-Ray Chest Bucky	OWNER	VENDOR	GC
28	X-Ray Control Panel	OWNER	VENDOR	GC
29	X-Ray Power Supply	OWNER	VENDOR	GC
30	X-Ray Scanner / Burner	OWNER	OWNER	GC
31	Exam Table	OWNER	OWNER	N/A
32	Exam Console	OWNER	OWNER	N/A
33	EKG Machine - Cart	OWNER	OWNER	N/A
34	Dbl Stacked Lockers 12W	OWNER	OWNER	N/A
35	Oven / Range	OWNER	GC	GC
36	Dishwasher	OWNER	GC	GC
37	Refrigerator / Freezer	OWNER	OWNER	GC
38	Sharps Container	OWNER	OWNER	N/A
39	Time Clock	OWNER	OWNER	GC

GENERAL NOTES

A UNLESS SPECIFICALLY NOTED OTHERWISE - INTERIOR DIMENSIONS ARE TO FACE OF STUD, FACE OF CMU OR FACE OF CONCRETE WHERE INDICATED. WHERE FACE OF FINISH OR CLEAR DIMENSIONS ARE INDICATED FOR COORDINATION PURPOSES OR TO DESIGNATE REQUIRED CODE CLEARANCES, THE DIMENSION IS TYPICALLY DESIGNATED AS "FOF" (FACE OF FINISH) OR "CLEAR".

B CONTRACTOR RESPONSIBLE FOR FIELD MEASUREMENTS ON OVERALL DIMENSIONS.

C ROUGH-IN AND CLEARANCE DIMENSIONS, BLOCKING AND ANCHORAGE FOR SHOWER UNITS, (AS WELL AS LAUNDRY EQUIPMENT, APPLIANCES, AND SIMILAR BUILT-IN OR DIMENSIONALLY CRITICAL ITEMS) IS TO BE PROVIDED PER THE MANUFACTURER'S WRITTEN INSTALLATION INSTRUCTIONS.

D DIMENSIONS INDICATED AT SHOWER FIXTURES ARE APPROXIMATE. PRIOR TO BEGINNING PARTITION LAYOUT WORK OBTAIN ACTUAL SAMPLES OF EACH PREFABRICATED SHOWER ENCLOSURE AND CONSTRUCT MOCK-UPS OF EACH TYPICAL CONDITION TO ESTABLISH EXACT ROUGH-IN DIMENSIONS AND FRAMING, BLOCKING AND FINISH DETAILS.

E SHOWER UNITS SHALL BE GROUTED SOLID UNDERNEATH - FILL VOID BETWEEN FLOOR SLAB AND FLOOR OF SHOWER.

F DWELLING UNITS DESIGNATED AS "HC" ON THE PLANS ARE UNITS WITH MOBILITY FEATURES IN ACCORDANCE WITH APPLICABLE ACCESSIBILITY CODES. ROOMS NOTED "HC-R" ARE PROVIDED WITH ROLL-IN TYPE SHOWER ENCLOSURESS. ROOMS NOTED AS "HC-T" ARE PROVIDED WITH TRANSFER TYPE SHOWER ENCLOSURES. UNITS DESIGNATED WITH "C" ARE UNITS TO BE PROVIDED WITH COMMUNICATIONS FEATURES.

G ALL DWELLING UNITS NOT DESIGNATED AS "HC" ARE TO BE CONSTRUCTED AS "TYPE B" UNITS PER CHAPTER 11 OF ICC AND APPLICABLE PROVISIONS OF ICC/ANSI A117.1 AND THE FAIR HOUSING ACT DESIGN MANUAL.

H EXCEPT AS NOTED OTHERWISE, LAUNDRY EQUIPMENT AND RESIDENTIAL APPLIANCES ARE NOT IN CONTRACT (NIC) - LAUNDRY EQUIPMENT WILL BE FURNISHED AND INSTALLED BY THE OWNER'S SEPARATE LAUNDRY CONTRACTOR (WITH THE EXCEPTION OF STAFF APARTMENT LAUNDRY EQUIPMENT). RESIDENTIAL KITCHEN EQUIPMENT (WITH THE EXCEPTION OF WALL OVENS AND RANGE HOODS) WILL BE OWNER FURNISHED AND CONTRACTOR INSTALLED. PROVIDE ROUGH-IN FOR LAUNDRY EQUIPMENT AND RESIDENTIAL KITCHEN APPLIANCES. REFER TO ELECTRICAL DRAWINGS FOR POWER AND DATA - REFER TO PLUMBING DRAWINGS FOR GAS, WATER AND DRAINAGE - REFER TO MECHANICAL DRAWING FOR EXHAUSTING AS APPLICABLE. COORDINATE ROUGH-IN REQUIREMENTS WITH THE OWNER AND OBTAIN MANUFACTURER'S REQUIREMENTS PRIOR TO COMMENCEMENT OF ROUGH-IN WORK.

I LOCATE WHEELCHAIR ACCESSIBLE WATER CLOSETS 17" FROM CENTERLINE OF WATER CLOSET TO FACE OF FINISH AT ADJACENT WALL, TYPICAL. FLUSH HANDLES TO BE LOCATED ON THE WIDE (OPEN) SIDE OF THE FIXTURE, TYPICAL.

J PROVIDE FLOOR DRAINS (FD) AT ROLL-IN (R) AND TRANSFER (T) SHOWERS. REFER TO PLUMBING DRAWINGS, SLOPE FLOORS TO DRAIN.

K WHERE NOTED AT HANDICAP ACCESSIBLE DWELLING UNITS, PROVIDE REMOVABLE BASE CABINETS AT KITCHEN AND BATHROOM SINKS COMPLYING WITH THE REQUIREMENTS OF ADA STANDARDS FOR ACCESSIBLE DESIGN (SECTION 606.2 EXCEPTION NO. 3).

L CONTRACTOR TO PROVIDE 12 GAGE METAL BLOCKING IN STUD WALLS FOR ANCHORAGE OF WALL MOUNTED ITEMS INCLUDING BUT NOT LIMITED TO TOILET ACCESSORIES, WALL CABINETS, WALL MOUNTED TV'S, SHELVING, TOILET PARTITIONS, OWNER FURNISHED EQUIPMENT INDICATED AND SIMILAR ITEMS. FOR "TYPE B" DWELLING UNITS, PROVIDE METAL BLOCKING IN WALLS FOR FUTURE INSTALLATIONS AS INDICATED. FOR WALL MOUNTED TV'S IN LOUNGES, PROVIDE METAL BLOCKING 24" ABOVE AND BELOW ELECTRICAL JUNCTION BOXES.

M REFER TO A026 FOR DESCRIPTION OF ALL PARTITION TYPES.

N REFER TO A100 (1/8" FLOOR PLANS) SERIES DRAWINGS AND A300 SERIES DRAWINGS (ENLARGED PLANS) FOR PARTITION TYPE LOCATIONS.

O REFER TO LS SERIES DRAWING (LIFE SAFETY PLANS) FOR LOCATIONS OF FIRE RATED WALLS AND PARTITIONS.

P REFER TO A000 SERIES DRAWINGS FOR WINDOW TYPES AND DOOR TYPES, SCHEDULES AND DETAILS.

Q REFER TO A000 SERIES DRAWINGS FOR INTERIOR FINISH SCHEDULES.

R REFER TO A100 SERIES DRAWINGS (ENLARGED PLANS) FOR ADDITIONAL PLAN NOTES.

S REFER TO PROJECT MANUAL SECTION 10 28 00 FOR TOILET ACCESSORY SCHEDULE.

REGISTERED ARCHITECT Thomas D. Saunders 3693 Tupelo, MS STATE OF MISSISSIPPI
04 march 2013

THE McCARTY COMPANY
DESIGN GROUP, P.A.
MAILING ADDRESS: P.O. BOX 440 TUPELO, MS 38802
OFFICE ADDRESS: 533 WEST MAIN STREET TUPELO, MS 38804
TELEPHONE: (662) 844-4400 FAX: (662) 844-0500

DESIGN ARCHITECT
Hanbury Evans Wright Vlattas + Company
120 Atlantic Street
Norfolk, VA 23510
757.321.9600
www.hewv.com

PROJECT TITLE
USM - CENTURY PARK SOUTH
IHL# 208-297
HATTIESBURG, MISSISSIPPI

THE UNIVERSITY OF SOUTHERN MISSISSIPPI

PROJECT NO: 2012020
DRAWN BY: JCF
CHECKED BY: JPH
DATE ISSUED: 04 MAR 2013

REVISIONS & ADDENDUMS

SHEET TITLE
BUILDING A - INTERIOR ELEVATIONS - HEALTH CLINIC

SHEET NUMBER
A613

Plot Date: BID DOCUMENTS - 04 MARCH 2013
3/11/2013 4:55:36 AM

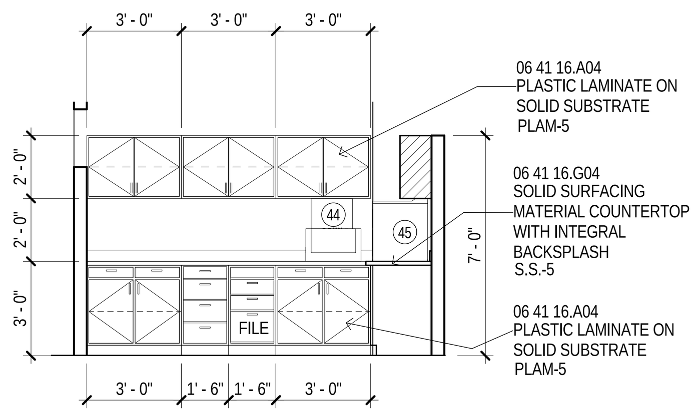

1 WORK LD110
1/4" = 1'-0" A333

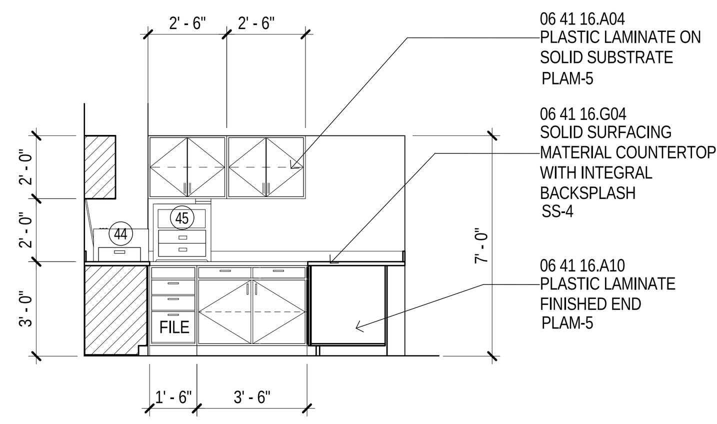

2 WORK LD110
1/4" = 1'-0" A333

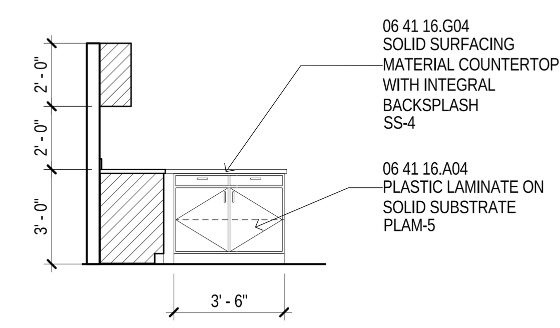

3 WORK LD110
1/4" = 1'-0" A333

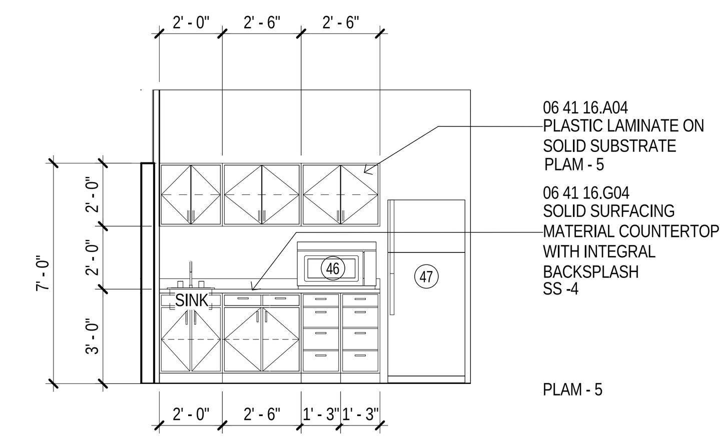

4 BREAK LD111
1/4" = 1'-0" A333

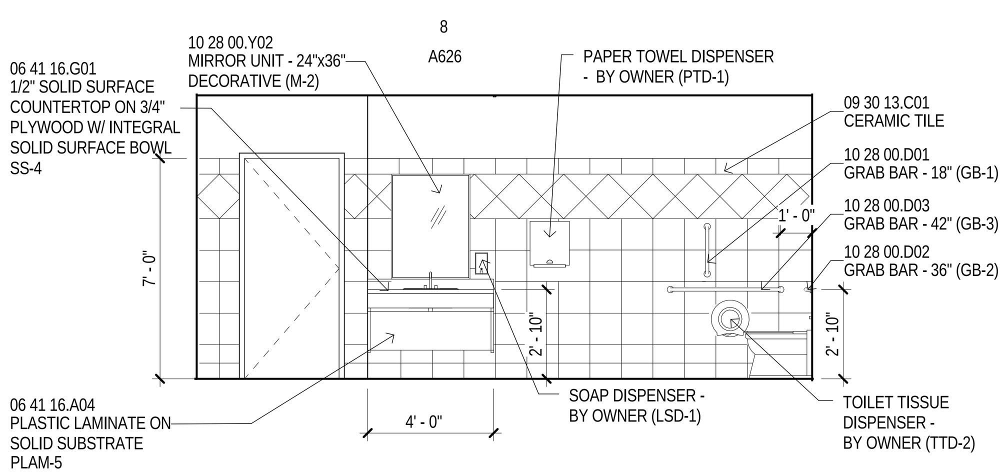

5 MEN TLT LD 113
1/4" = 1'-0" A333

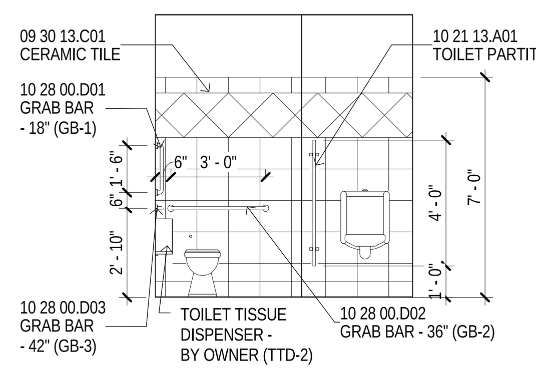

6 MEN TLT LD 113
1/4" = 1'-0" A333

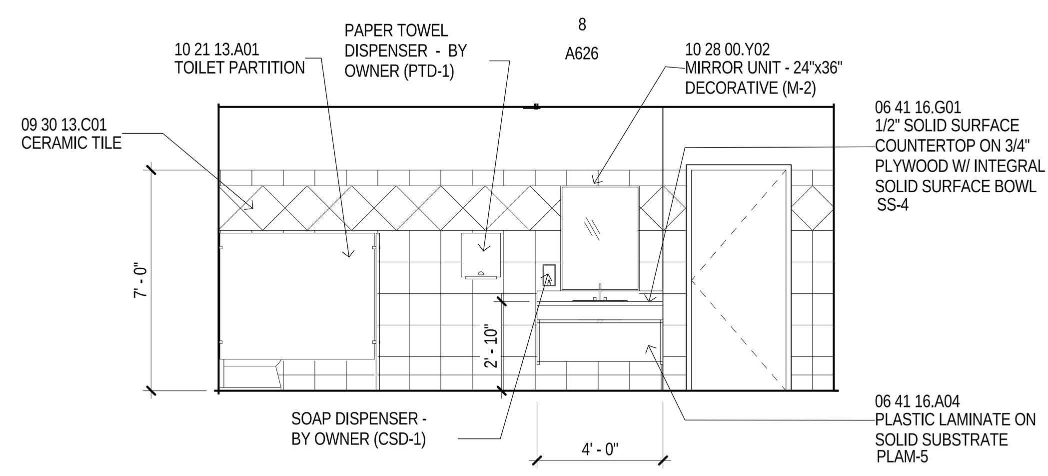

7 WOMENS TOILET LD114
1/4" = 1'-0" A333

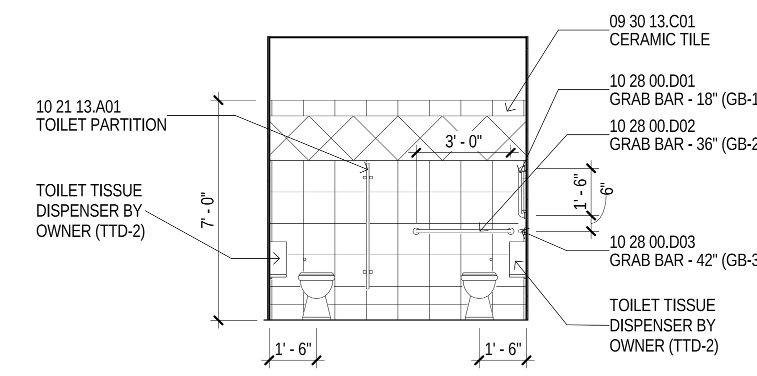

8 WOMENS TOILET LD114
1/4" = 1'-0" A333

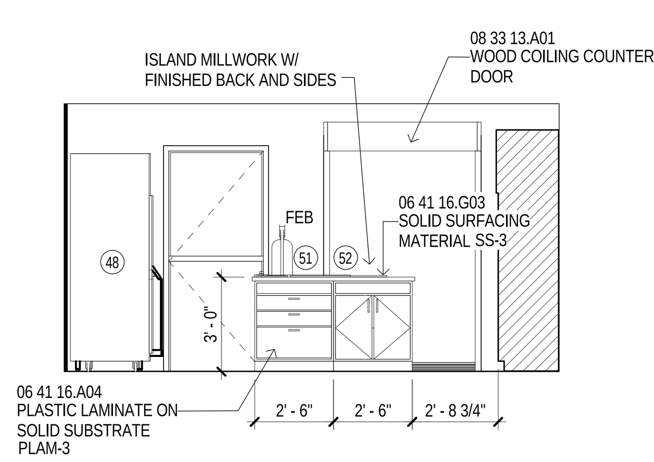

10 KITCHEN LD 217B
1/4" = 1'-0" A333

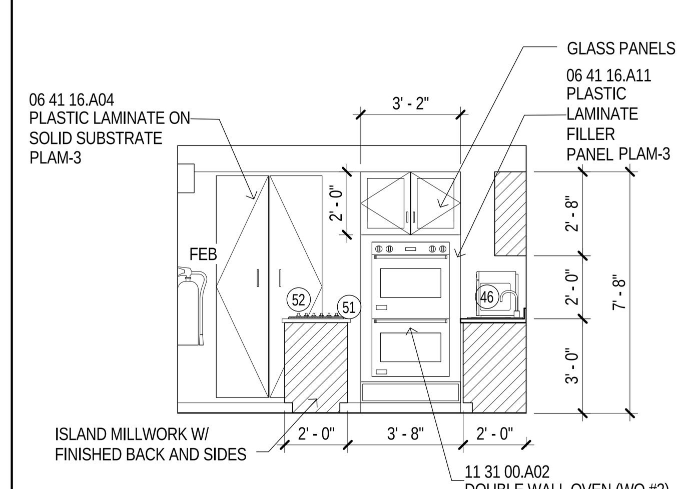

11 KITCHEN LD 217B
1/4" = 1'-0" A333

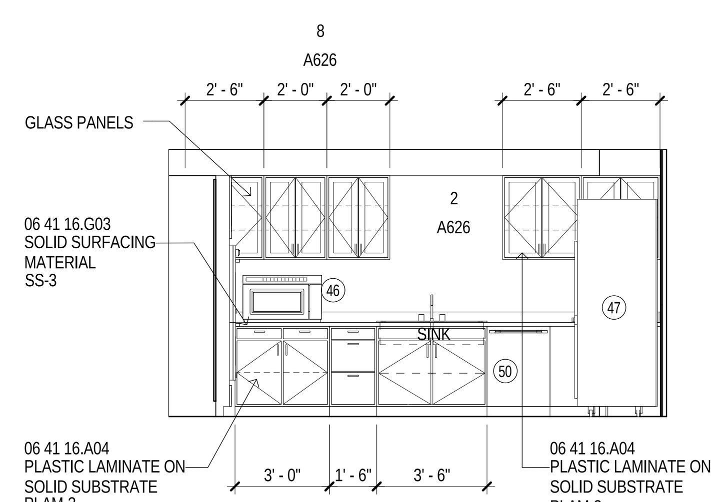

12 KITCHEN LD 217B
1/4" = 1'-0" A304

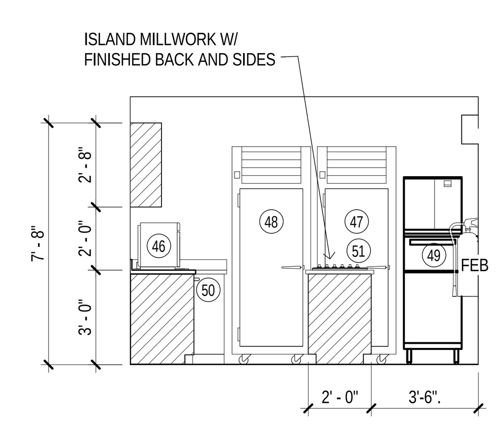

13 KITCHEN LD217B
1/4" = 1'-0" A333

EQUIPMENT SCHEDULE

MARK	Type	Provide by	INSTALL	ROUGH-IN
41	Fixed Interactive Display	OWNER	OWNER	GC
42	Teacher's Cart	OWNER	OWNER	GC
43	Copier / Printer	OWNER	OWNER	GC
44	Fax - Desktop	OWNER	OWNER	GC
45	Printer - Desktop	OWNER	OWNER	GC
46	Microwave	OWNER	OWNER	GC
47	Refrigerator	OWNER	OWNER	GC
48	Freezer	OWNER	OWNER	GC
49	Ice Machine - Floor	OWNER	OWNER	GC
50	Dishwasher	OWNER	GC	GC
51	Griddle	OWNER	GC	GC
52	Cook Top	OWNER	GC	GC
53	Mobile Display Cart	OWNER	OWNER	GC

GENERAL NOTES

A UNLESS SPECIFICALLY NOTED OTHERWISE - INTERIOR DIMENSIONS ARE TO FACE OF STUD, FACE OF CMU OR FACE OF CONCRETE WHERE INDICATED. WHERE FACE OF FINISH OR CLEAR DIMENSIONS ARE INDICATED FOR COORDINATION PURPOSES OR TO DESIGNATE REQUIRED CODE CLEARANCES, THE DIMENSION IS TYPICALLY DESIGNATED AS "FOF" (FACE OF FINISH) OR "CLEAR".

B CONTRACTOR RESPONSIBLE FOR FIELD MEASUREMENTS ON OVERALL DIMENSIONS.

C ROUGH-IN AND CLEARANCE DIMENSIONS, BLOCKING AND ANCHORAGE FOR SHOWER UNITS, (AS WELL AS LAUNDRY EQUIPMENT, APPLIANCES, AND SIMILAR BUILT-IN OR DIMENSIONALLY CRITICAL ITEMS) IS TO BE PROVIDED PER THE MANUFACTURER'S WRITTEN INSTALLATION INSTRUCTIONS.

D DIMENSIONS INDICATED AT SHOWER FIXTURES ARE APPROXIMATE. PRIOR TO BEGINNING PARTITION LAYOUT WORK OBTAIN ACTUAL SAMPLES OF EACH PREFABRICATED SHOWER ENCLOSURE AND CONSTRUCT MOCK-UPS OF EACH TYPICAL CONDITION TO ESTABLISH EXACT ROUGH-IN DIMENSIONS AND FRAMING, BLOCKING AND FINISH DETAILS.

E SHOWER UNITS SHALL BE GROUTED SOLID UNDERNEATH - FILL VOID BETWEEN FLOOR SLAB AND FLOOR OF SHOWER.

F DWELLING UNITS DESIGNATED AS "HC" ON THE PLANS ARE UNITS WITH MOBILITY FEATURES IN ACCORDANCE WITH APPLICABLE ACCESSIBILITY CODES. ROOMS NOTED "HC-R" ARE PROVIDED WITH ROLL-IN TYPE SHOWER ENCLOSURESS. ROOMS NOTED AS "HC-T" ARE PROVIDED WITH TRANSFER TYPE SHOWER ENCLOSURES. UNITS DESIGNATED WITH "C" ARE UNITS TO BE PROVIDED WITH COMMUNICATIONS FEATURES.

G ALL DWELLING UNITS NOT DESIGNATED AS "HC" ARE TO BE CONSTRUCTED AS "TYPE B" UNITS PER CHAPTER 11 OF ICC AND APPLICABLE PROVISIONS OF ICC/ANSI A117.1 AND THE FAIR HOUSING ACT DESIGN MANUAL.

H EXCEPT AS NOTED OTHERWISE, LAUNDRY EQUIPMENT AND RESIDENTIAL APPLIANCES ARE NOT IN CONTRACT (NIC) - LAUNDRY EQUIPMENT WILL BE FURNISHED AND INSTALLED BY THE OWNER'S SEPARATE LAUNDRY CONTRACTOR (WITH THE EXCEPTION OF STAFF APARTMENT LAUNDRY EQUIPMENT). RESIDENTIAL KITCHEN EQUIPMENT (WITH THE EXCEPTION OF WALL OVENS AND RANGE HOODS) WILL BE OWNER FURNISHED AND CONTRACTOR INSTALLED. PROVIDE ROUGH-IN FOR LAUNDRY EQUIPMENT AND RESIDENTIAL KITCHEN APPLIANCES. REFER TO ELECTRICAL DRAWINGS FOR POWER AND DATA - REFER TO PLUMBING DRAWINGS FOR GAS, WATER AND DRAINAGE - REFER TO MECHANICAL DRAWING FOR EXHAUSTING AS APPLICABLE. COORDINATE ROUGH-IN REQUIREMENTS WITH THE OWNER AND OBTAIN MANUFACTURER'S REQUIREMENTS PRIOR TO COMMENCEMENT OF ROUGH-IN WORK.

I LOCATE WHEELCHAIR ACCESSIBLE WATER CLOSETS 17" FROM CENTERLINE OF WATER CLOSET TO FACE OF FINISH AT ADJACENT WALL, TYPICAL. FLUSH HANDLES TO BE LOCATED ON THE WIDE (OPEN) SIDE OF THE FIXTURE, TYPICAL.

J PROVIDE FLOOR DRAINS (FD) AT ROLL-IN (R) AND TRANSFER (T) SHOWERS. REFER TO PLUMBING DRAWINGS, SLOPE FLOORS TO DRAIN.

K WHERE NOTED AT HANDICAP ACCESSIBLE DWELLING UNITS, PROVIDE REMOVABLE BASE CABINETS AT KITCHEN AND BATHROOM SINKS COMPLYING WITH THE REQUIREMENTS OF ADA STANDARDS FOR ACCESSIBLE DESIGN (SECTION 606.2 EXCEPTION NO. 3).

L CONTRACTOR TO PROVIDE 12 GAGE METAL BLOCKING IN STUD WALLS FOR ANCHORAGE OF WALL MOUNTED ITEMS INCLUDING BUT NOT LIMITED TO TOILET ACCESSORIES, WALL CABINETS, WALL MOUNTED TV'S, SHELVING, TOILET PARTITIONS, OWNER FURNISHED EQUIPMENT INDICATED AND SIMILAR ITEMS. FOR "TYPE B" DWELLING UNITS, PROVIDE METAL BLOCKING IN WALLS FOR FUTURE INSTALLATIONS AS INDICATED. FOR WALL MOUNTED TV'S IN LOUNGES, PROVIDE METAL BLOCKING 24" ABOVE AND BELOW ELECTRICAL JUNCTION BOXES.

M REFER TO A026 FOR DESCRIPTION OF ALL PARTITION TYPES.

N REFER TO A100 (1/8" FLOOR PLANS) SERIES DRAWINGS AND A300 SERIES DRAWINGS (ENLARGED PLANS) FOR PARTITION TYPE LOCATIONS.

O REFER TO LS SERIES DRAWING (LIFE SAFETY PLANS) FOR LOCATIONS OF FIRE RATED WALLS AND PARTITIONS.

P REFER TO A000 SERIES DRAWINGS FOR WINDOW TYPES AND DOOR TYPES, SCHEDULES AND DETAILS.

Q REFER TO A000 SERIES DRAWINGS FOR INTERIOR FINISH SCHEDULES.

R REFER TO A100 SERIES DRAWINGS (ENLARGED PLANS) FOR ADDITIONAL PLAN NOTES.

S REFER TO PROJECT MANUAL SECTION 10 28 00 FOR TOILET ACCESSORY SCHEDULE.

REGISTERED ARCHITECT
Thomas D. Saunders
3693
Tupelo, MS
STATE OF MISSISSIPPI
04 march 2013

THE McCARTY COMPANY
DESIGN GROUP, P.A.
MAILING ADDRESS:
P.O. BOX 440
TUPELO, MS 38802
OFFICE ADDRESS:
533 WEST MAIN STREET
TUPELO, MS 38804
TELEPHONE:
(662) 844-4400
FAX:
(662) 844-0500

DESIGN ARCHITECT
Hanbury Evans Wright Vlattas + Company
120 Atlantic Street
Norfolk, VA 23510
757.321.9600
www.hewv.com

PROJECT TITLE
USM - CENTURY PARK SOUTH
IHL# 208-297
HATTIESBURG, MISSISSIPPI

THE UNIVERSITY OF
SOUTHERN
MISSISSIPPI

PROJECT NO:
• 2012020
DRAWN BY:
• JCF
CHECKED BY:
• JPH
DATE ISSUED:
• 04 MAR 2013

REVISIONS & ADDENDUMS

SHEET TITLE
BUILDING B - INTERIOR ELEVATIONS - LUCKYDAY

SHEET NUMBER
A614

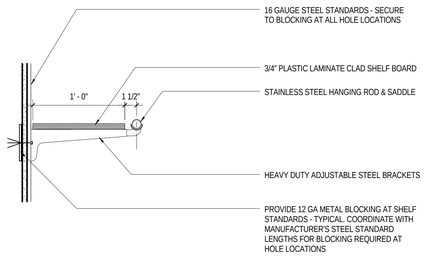

1 TYPICAL ADJUSTABLE CLOSET SHELF AND ROD
1 1/2" = 1'-0" A603

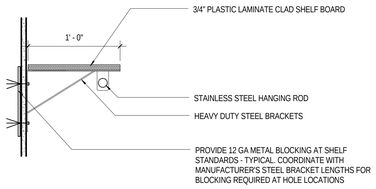

2 TYPICAL CLOSET SHELF AND ROD
1 1/2" = 1'-0"

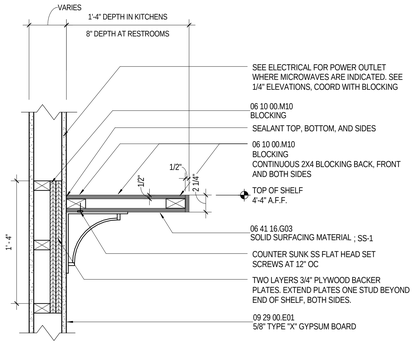

3 TYPICAL KITCHEN SHELF
1 1/2" = 1'-0" A601

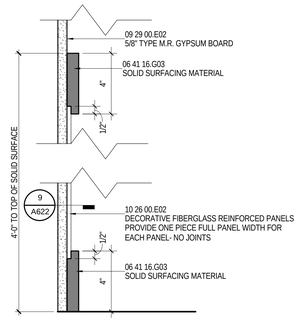

4 WAINSCOT CAP
3" = 1'-0"

BUILDING A, B, & C PUBLIC TOILETS:
MARLITE, SOLID SURFACE BASE AND CAP, AND VERTICAL TERMINATION EDGE. REFERENCE ELEVATIONS FOR EXTENTS.
BUILDING C COMMUNITY BATHS:
MARLITE, SOLID SURFACE BASE AND CAP. ALL WALLS.
TYPICAL STUDENT ROOM BATHS:
MARLITE, SOLID SURFACE BASE, ALUMINUM EDGE FOR VERTICAL TERMINATION AND TOP CAP. REFERENNCE ELEVATIONS FOR EXTENTS

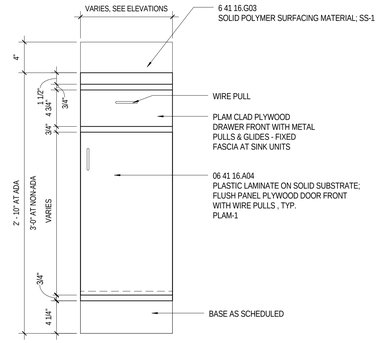

5 TYPICAL BASE CABINET ELEVATION
1 1/2" = 1'-0"

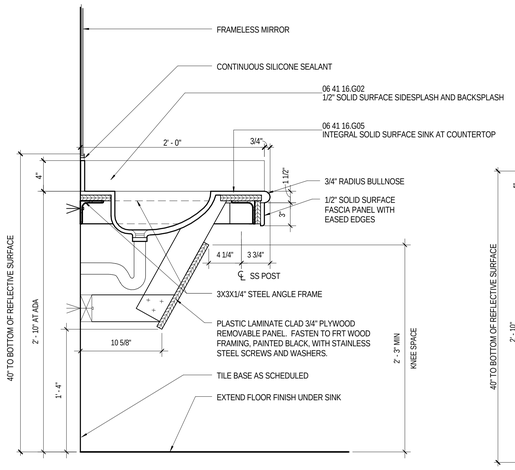

6 TYPICAL VANITY SECTION
1 1/2" = 1'-0"

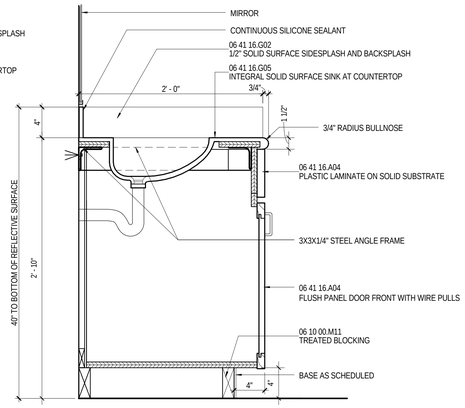

7 VANITY BASE CABINET WITH SINK
1 1/2" = 1'-0" A603

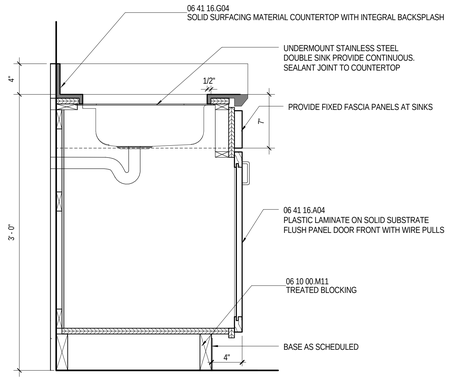

8 BASE CABINET AT KITCHEN SINK
1 1/2" = 1'-0" A602

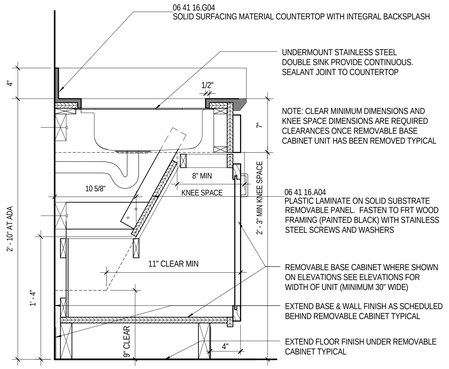

9 BASE CABINET AT SINK
1 1/2" = 1'-0" A601

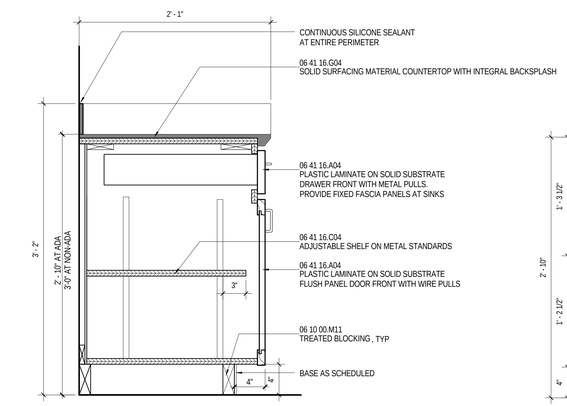

10 TYPICAL BASE CABINET
1 1/2" = 1'-0" A601

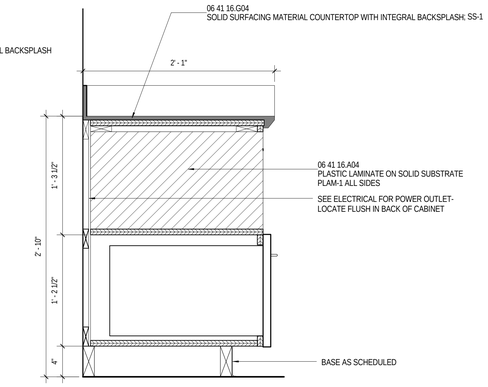

11 BASE CABINET WITH MICROWAVE
1 1/2" = 1'-0" A601

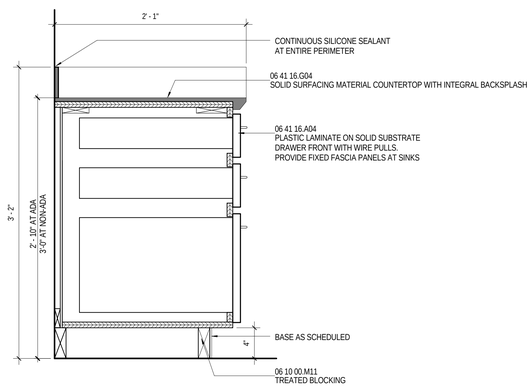

12 BASE CABINET WITH DRAWERS
1 1/2" = 1'-0"

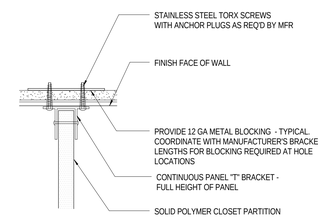

13 STUDENT ROOM - CLOSET PARTITION JAMB
3" = 1'-0" A603

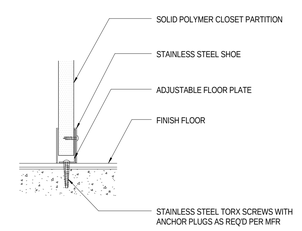

14 STUDENT ROOM - CLOSET PARTITION SILL
3" = 1'-0" A603

MATERIAL KEYING

06 10 00.M10	BLOCKING
06 10 00.M11	TREATED BLOCKING
06 41 16.A04	PLASTIC LAMINATE ON SOLID SUBSTRATE
06 41 16.C04	ADJUSTABLE SHELF ON METAL STANDARDS
06 41 16.G02	1/2" SOLID SURFACE SIDESPLASH AND BACKSPLASH
06 41 16.G03	SOLID SURFACING MATERIAL
06 41 16.G04	SOLID SURFACING MATERIAL COUNTERTOP WITH INTEGRAL BACKSPLASH
06 41 16.G05	INTEGRAL SOLID SURFACE SINK AT COUNTERTOP
09 29 00.E01	5/8" TYPE "X" GYPSUM BOARD
09 29 00.E02	5/8" TYPE M.R. GYPSUM BOARD
10 26 00.E02	DECORATIVE FIBERGLASS REINFORCED PANELS

INTERIOR DETAILS GENERAL NOTES

A. PROVIDE KEYED LOCKS ON ALL CABINETRY IN COMMON LOUNGE KITCHENS

THE McCARTY COMPANY
DESIGN GROUP, P.A.
MICHAEL EVANS 4283 STATE OF MISSISSIPPI
09 MAR 2013
TELEPHONE: (662) 844-4403
FAX: (662) 844-0503
OFFICE ADDRESS: 533 WEST MAIN STREET TUPELO, MS 38804
MAILING ADDRESS: P.O. BOX 440 TUPELO, MS 38802

DESIGN ARCHITECT
Hanbury Evans Wright Vlattas + Company
120 Atlantic Street
Norfolk, VA 23510
757.321.9600
www.hewv.com

PROJECT TITLE
USM - CENTURY PARK SOUTH
IHL# 208-297
HATTIESBURG, MISSISSIPPI

THE UNIVERSITY OF SOUTHERN MISSISSIPPI

PROJECT NO: 2012020
DRAWN BY: SLR & RC
CHECKED BY: JTG
DATE ISSUED: 04 MAR 2013

REVISIONS & ADDENDUMS

SHEET TITLE
INTERIOR DETAILS

SHEET NUMBER
A621

3/4/2013 12:29:06 PM

Plot Date: BID DOCUMENTS - 04 MARCH 2013

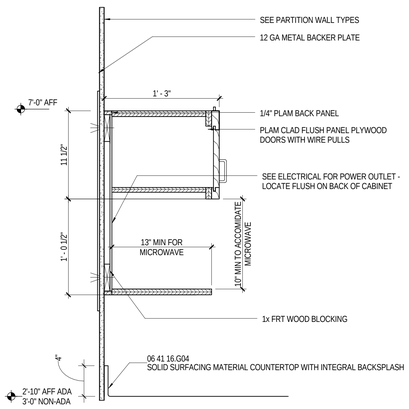

1 WALL CABINET WITH MICROWAVE
1 1/2" = 1'-0" A602

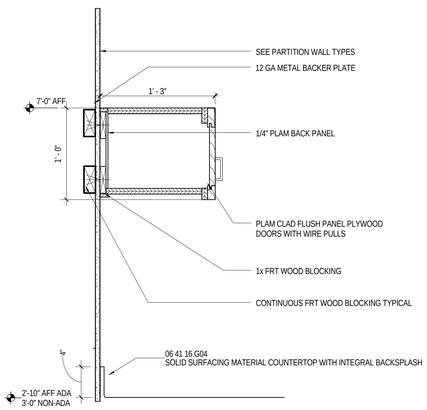

2 SHORT WALL CABINET
1 1/2" = 1'-0" A602

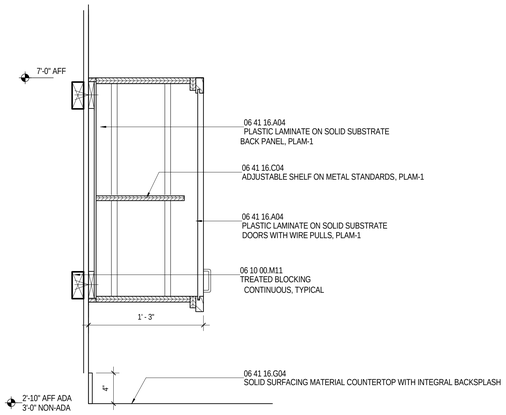

3 TYPICAL KITCHEN WALL CABINET
1 1/2" = 1'-0" A602

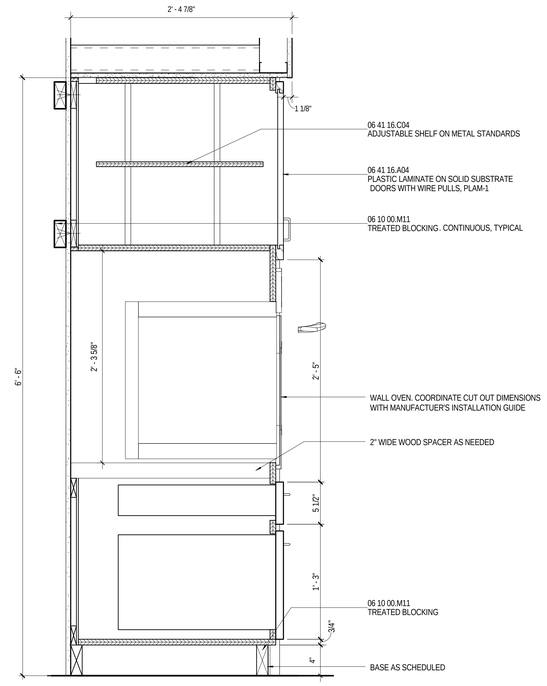

4 WALL OVEN SECTION
1 1/2" = 1'-0" A601

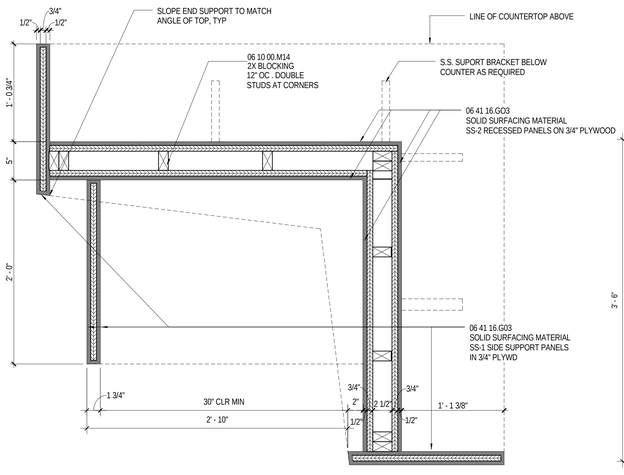

5 BUILDINGS A & B - TYPICAL BAR PLAN SECTION
1 1/2" = 1'-0" A601

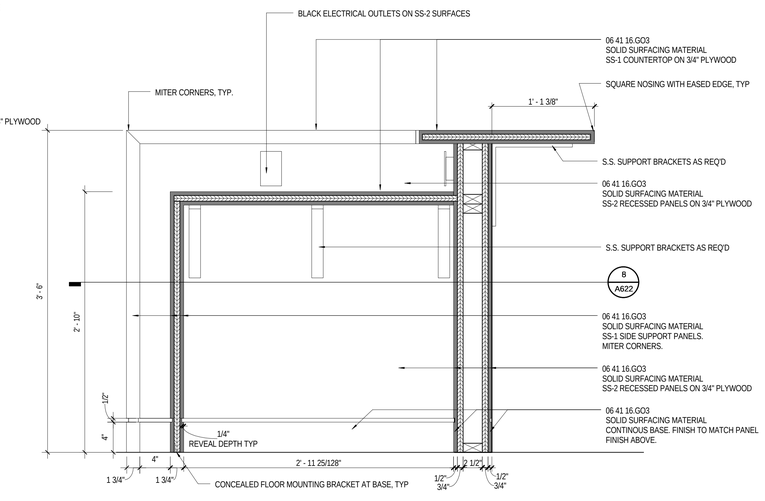

6 BUILDINGS A & B - TYPICAL BAR SECTION
1 1/2" = 1'-0" A310

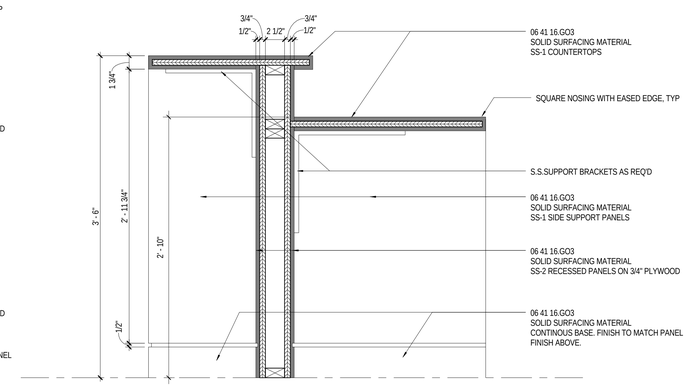

7 BUILDINGS A & B - TYPICAL BAR SECTION THROUGH ADA COUNTER
1 1/2" = 1'-0" A310

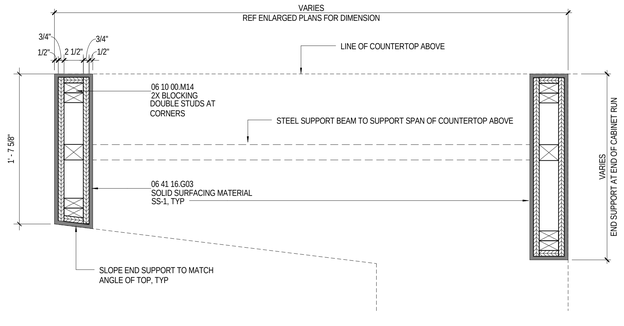

8 BUILDING C - BAR PLAN SECTION
1 1/2" = 1'-0" A622

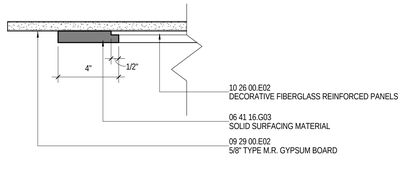

9 VERTICAL EDGE SOLID SURFACE CAP
3" = 1'-0" A621

MATERIAL KEYING

06 10 00.M11	TREATED BLOCKING
06 10 00.M14	2X BLOCKING
06 41 16.A04	PLASTIC LAMINATE ON SOLID SUBSTRATE
06 41 16.C04	ADJUSTABLE SHELF ON METAL STANDARDS
06 41 16.G03	SOLID SURFACING MATERIAL
06 41 16.G04	SOLID SURFACING MATERIAL COUNTERTOP WITH INTEGRAL BACKSPLASH
09 29 00.E02	5/8" TYPE M.R. GYPSUM BOARD
10 26 00.E02	DECORATIVE FIBERGLASS REINFORCED PANELS

INTERIOR DETAILS GENERAL NOTES

A. PROVIDE KEYED LOCKS ON ALL CABINETRY IN COMMON LOUNGE KITCHENS

THE McCARTY COMPANY
DESIGN GROUP, P.A.
TELEPHONE: (662) 844-4400
FAX: (662) 844-0503
OFFICE ADDRESS: 533 WEST MAIN STREET TUPELO, MS 38804
MAILING ADDRESS: P.O. BOX 440 TUPELO, MS 38802

DESIGN ARCHITECT
Hanbury Evans Wright Vlattas + Company
120 Atlantic Street
Norfolk, VA 23510
757.321.9600
www.hewv.com

PROJECT TITLE
USM - CENTURY PARK SOUTH
IHL# 208-297
HATTIESBURG, MISSISSIPPI

THE UNIVERSITY OF SOUTHERN MISSISSIPPI

PROJECT NO: 2012020
DRAWN BY: SLR
CHECKED BY: JTG
DATE ISSUED: 04 MAR 2013

REVISIONS & ADDENDUMS

SHEET TITLE
INTERIOR DETAILS

SHEET NUMBER
A622

3/4/2013 12:29:29 PM

Plot Date: BID DOCUMENTS - 04 MARCH 2013

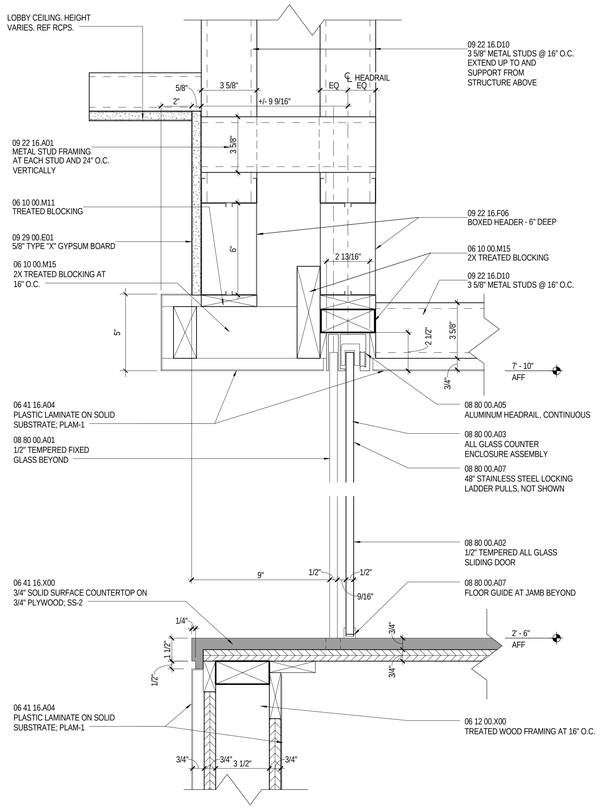

1 — 3" = 1'-0" — A601

ALL GLASS COUNTER ENCLOSURE AT DOOR OPENING

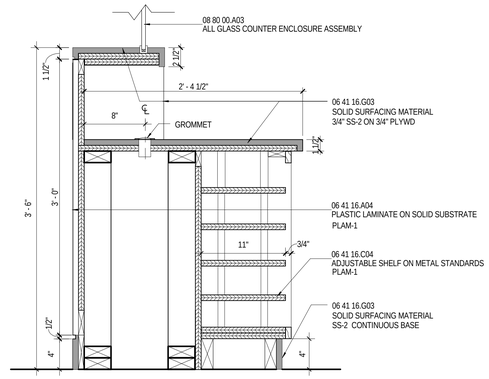

2 — 1 1/2" = 1'-0" — A601

FRONT DESK - PAPER SORTER

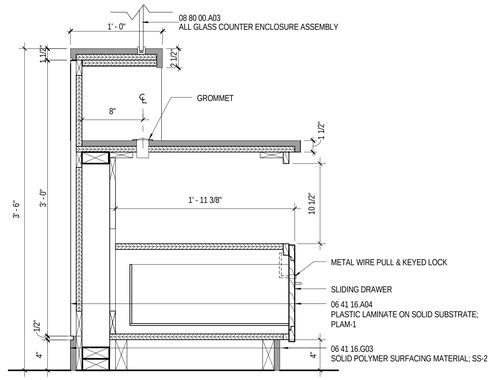

3 — 1 1/2" = 1'-0" — A601

FRONT DESK - SPEAKER STORAGE

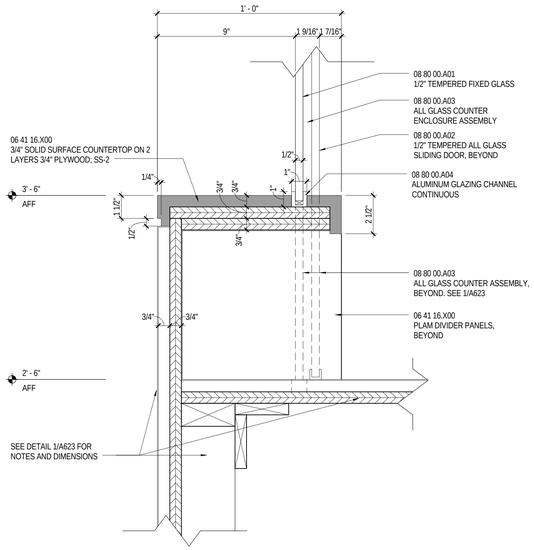

4 — 3" = 1'-0" — A601

ALL GLASS COUNTER ENCLOSURE

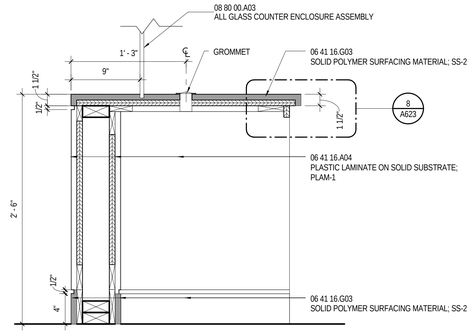

5 — 1 1/2" = 1'-0" — A601

FRONT DESK - KNEE SPACE

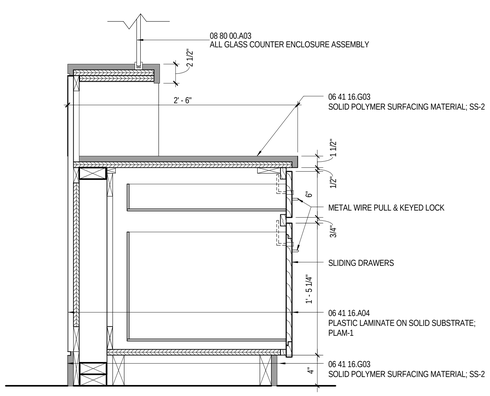

6 — 1 1/2" = 1'-0" — A601

FRONT DESK - DRAWER PEDESTAL

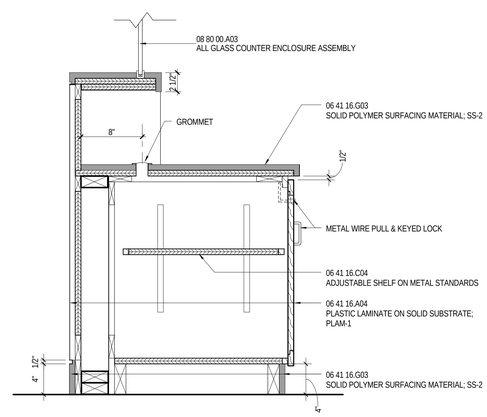

7 — 1 1/2" = 1'-0" — A601

FRONT DESK - BASE CABINET

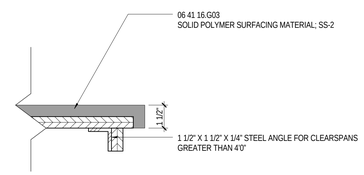

8 — 3" = 1'-0" — A623

FRONT DESK - EDGE DETAIL

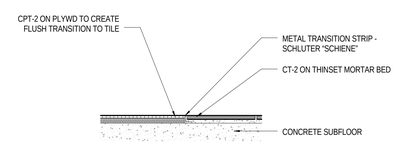

9 — 3" = 1'-0" — A101A

CARPET TO TILE TRANSITION AT LOBBIES

MATERIAL KEYING

06 10 00.M11	TREATED BLOCKING
06 10 00.M15	2X TREATED BLOCKING
06 41 16.A04	PLASTIC LAMINATE ON SOLID SUBSTRATE
06 41 16.C04	ADJUSTABLE SHELF ON METAL STANDARDS
08 80 00.A03	ALL GLASS COUNTER ENCLOSURE ASSEMBLY
09 22 16.A01	METAL STUD FRAMING
09 22 16.D10	3 5/8" METAL STUDS @ 16" O.C.
09 22 16.F06	BOXED HEADER
09 29 00.E01	5/8" TYPE "X" GYPSUM BOARD

INTERIOR DETAILS GENERAL NOTES

A. PROVIDE KEYED LOCKS ON ALL CABINETRY IN COMMON LOUNGE KITCHENS

THE McCARTY COMPANY
DESIGN GROUP, P.A.
OFFICE ADDRESS: 533 WEST MAIN STREET TUPELO, MS 38804
TELEPHONE: (662) 844-4400
FAX: (662) 844-0503
MAILING ADDRESS: P.O. BOX 440 TUPELO, MS 38802

DESIGN ARCHITECT
Hanbury Evans Wright Vlattas + Company
120 Atlantic Street
Norfolk, VA 23510
757.321.9600
www.hewv.com

PROJECT TITLE
USM - CENTURY PARK SOUTH
IHL# 208-297
HATTIESBURG, MISSISSIPPI

THE UNIVERSITY OF SOUTHERN MISSISSIPPI

PROJECT NO: 2012020
DRAWN BY: SLR
CHECKED BY: JG
DATE ISSUED: 04 MAR 2013

REVISIONS & ADDENDUMS

SHEET TITLE
INTERIOR DETAILS

SHEET NUMBER
A623

3/8/2013 1:34:55 PM

Plot Date: BID DOCUMENTS - 04 MARCH 2013

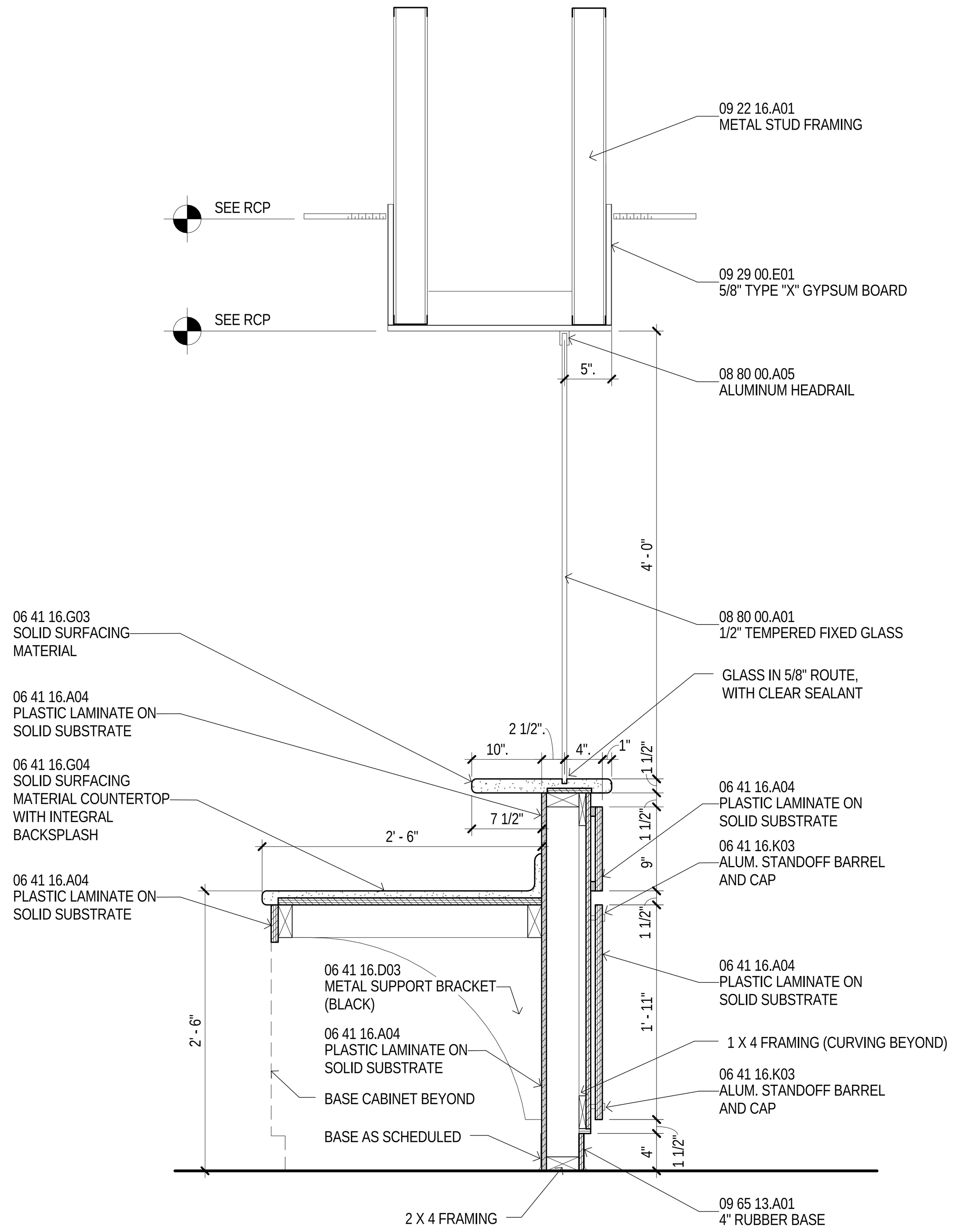

4 — MILLWORK DETAIL - DESK SECTION
1" = 1'-0"
A611

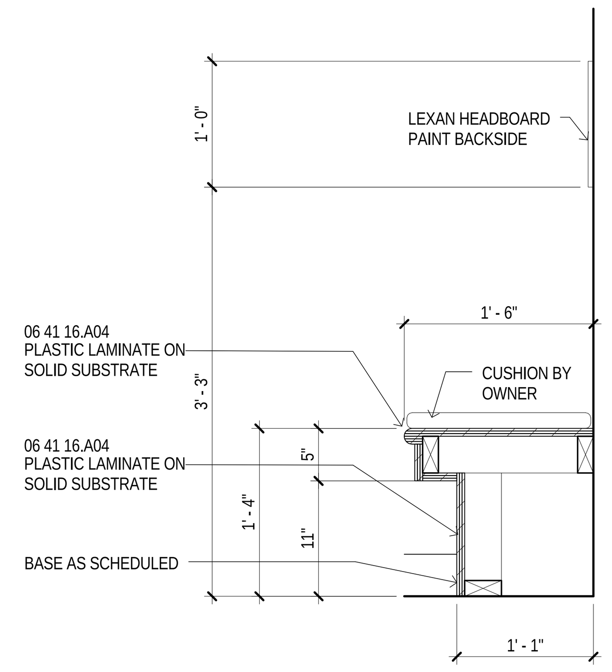

3 — MILLWORK DETAIL - EXAM BENCH
1" = 1'-0"
A613

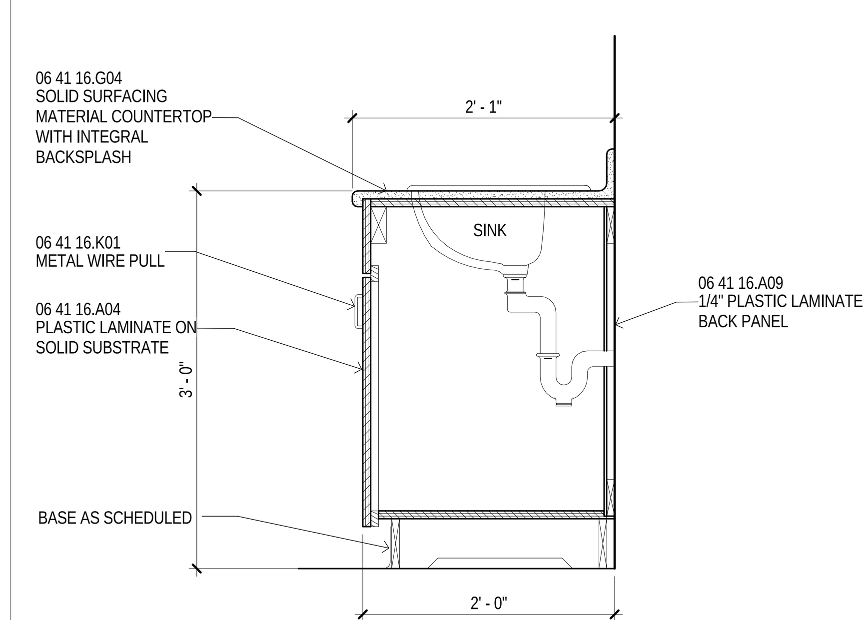

2 — MILLWORK DETAIL - TYPICAL SINK
1" = 1'-0"
A611

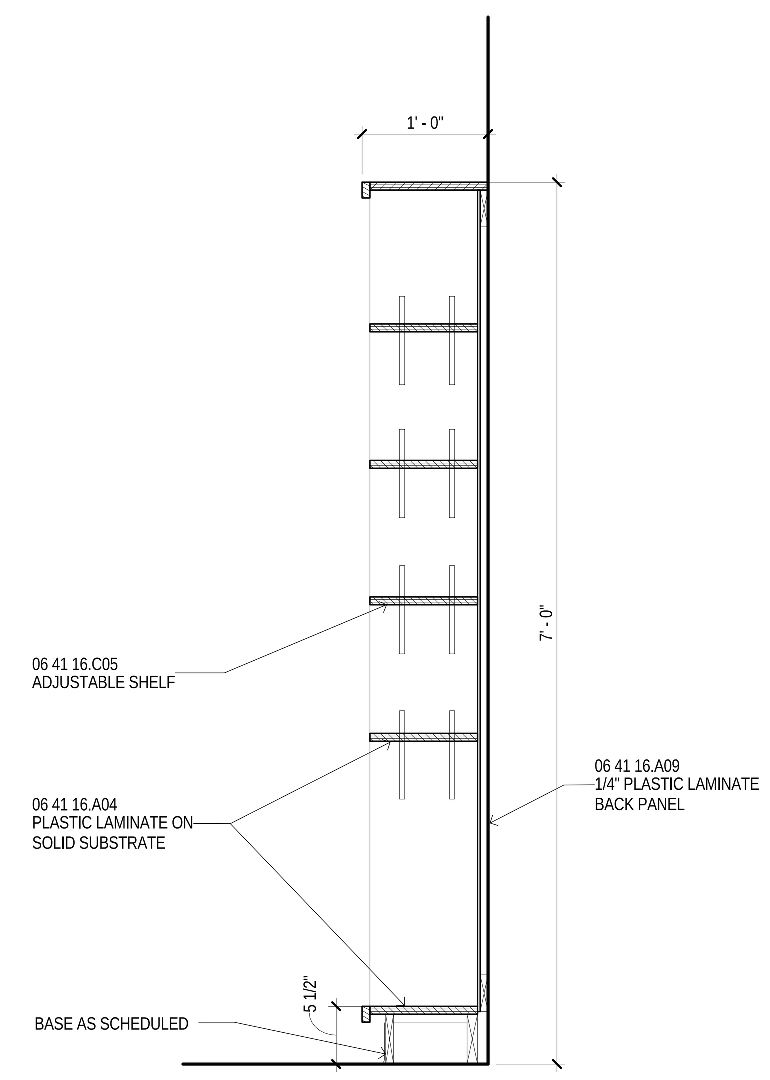

1 — MILLWORK DETAIL - PHARMACY SHELVES
1" = 1'-0"
A613

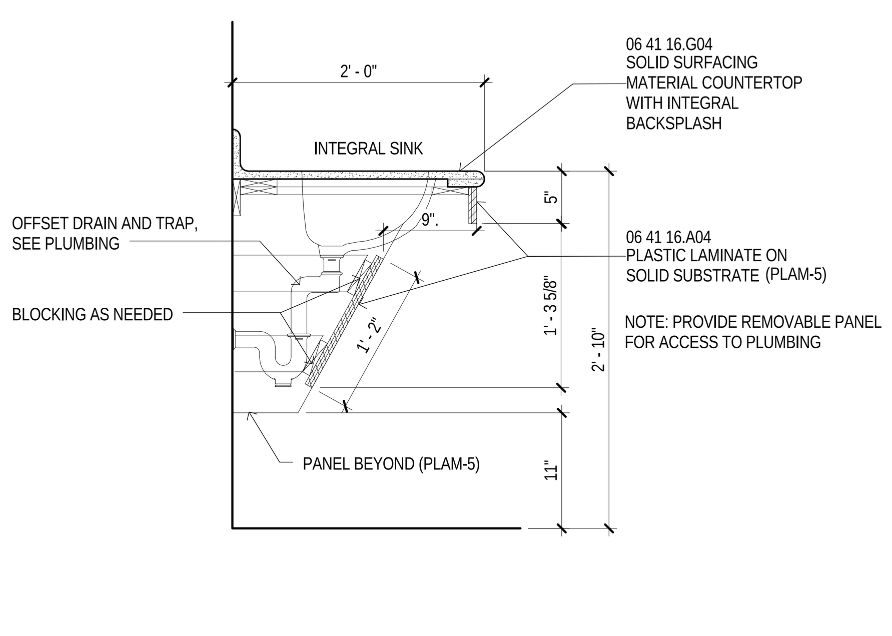

8 — MILLWORK DETAIL - ADA VANITY
1" = 1'-0"

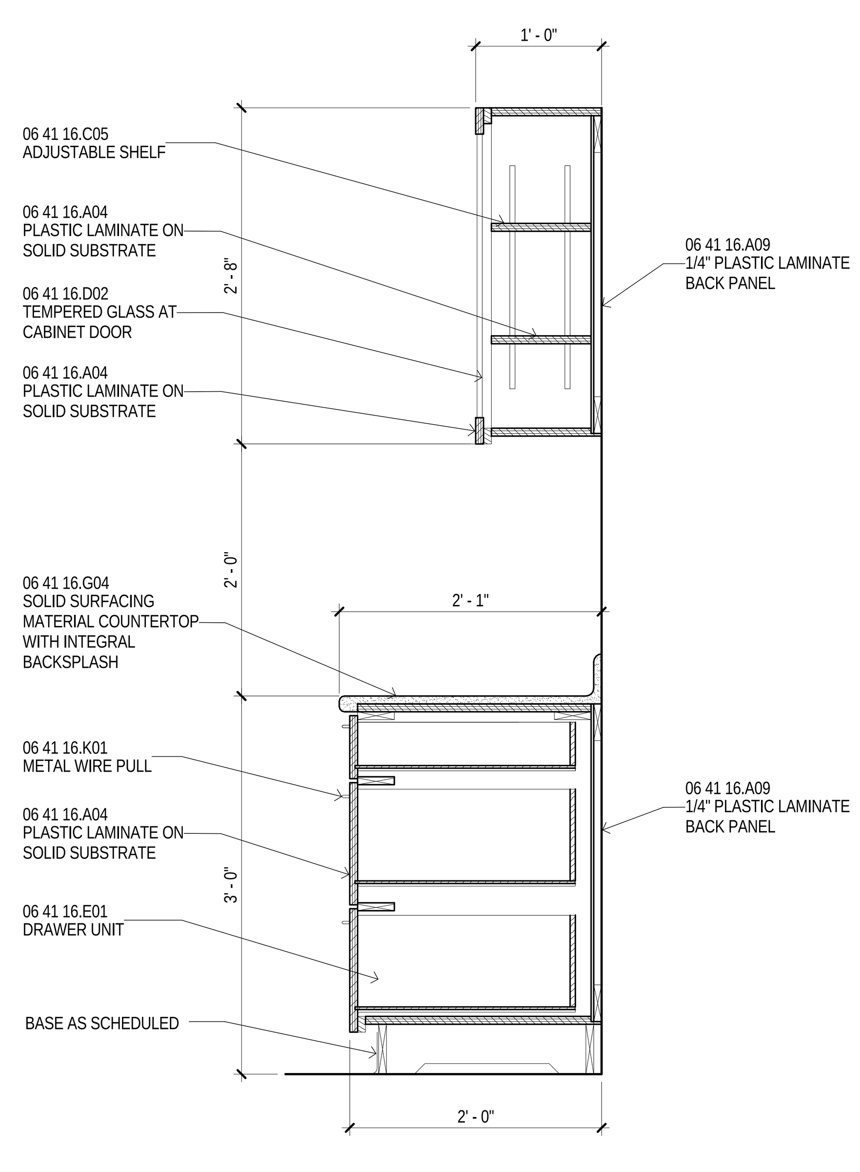

7 — MILLWORK DETAIL - LUCKYDAY KITCHEN
1" = 1'-0"

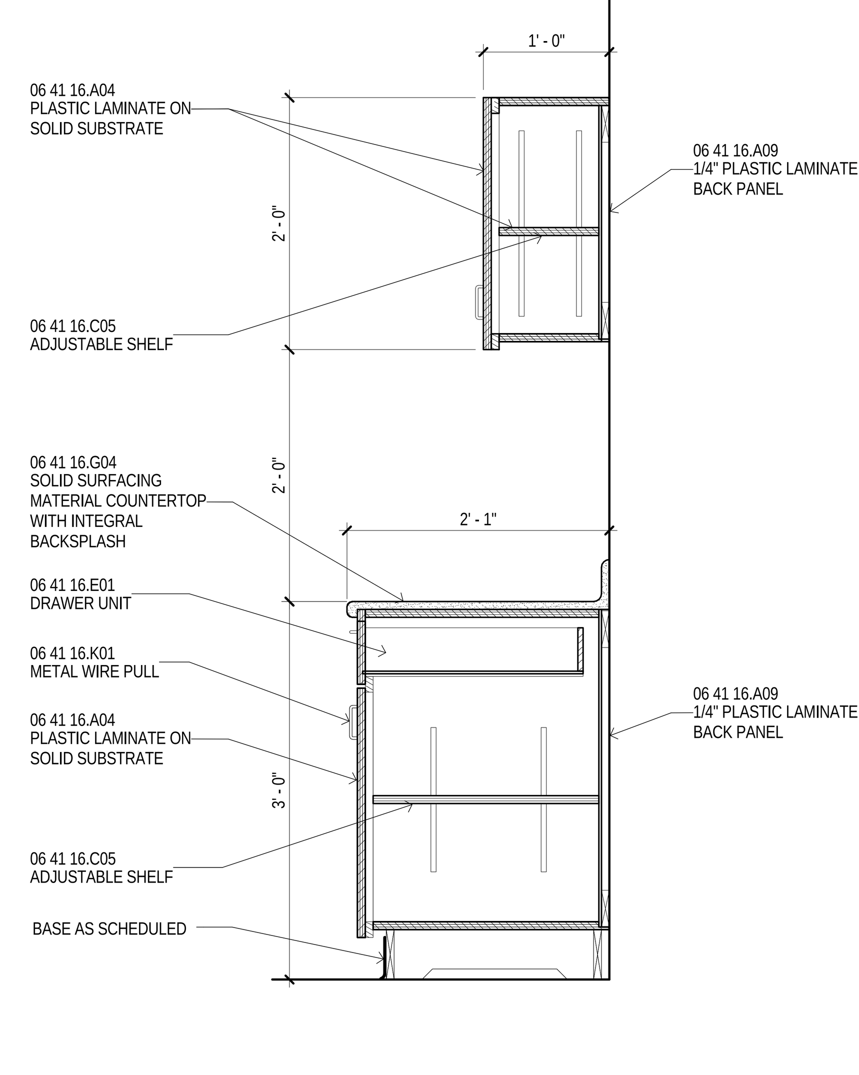

6 — MILLWORK DETAIL - TYPICAL SECTION
1" = 1'-0"
A611

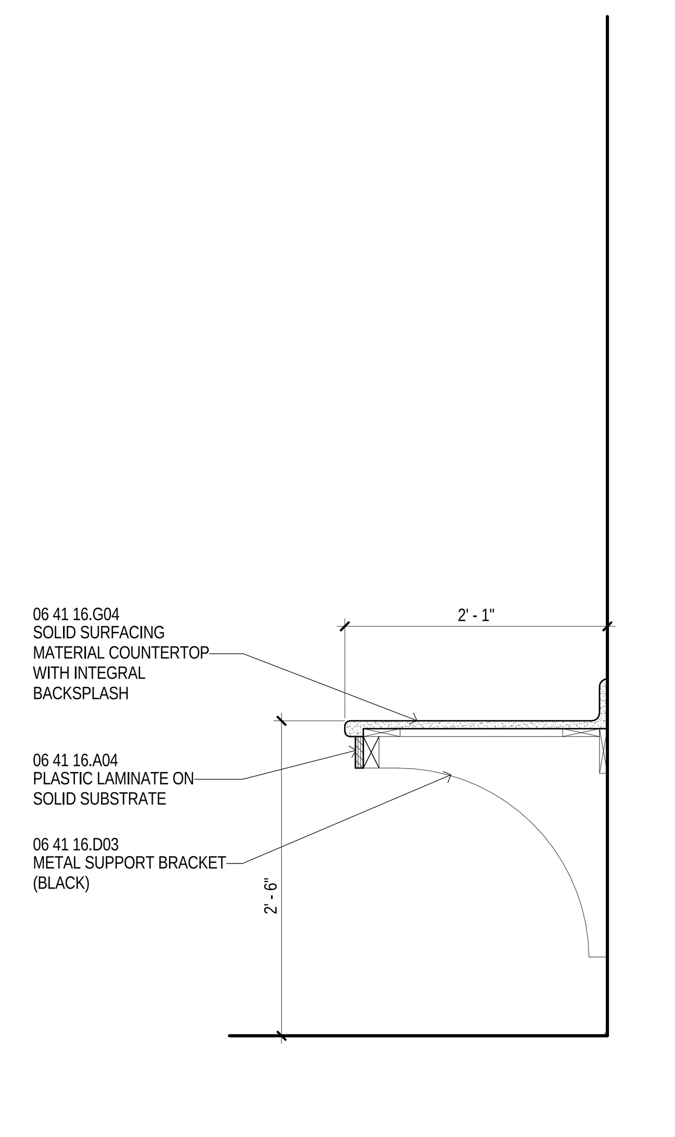

5 — MILLWORK DETAIL
1" = 1'-0"
A612

MATERIAL KEYING

06 41 16.A04	PLASTIC LAMINATE ON SOLID SUBSTRATE
06 41 16.A09	1/4" PLASTIC LAMINATE BACK PANEL
06 41 16.C05	ADJUSTABLE SHELF
06 41 16.D02	TEMPERED GLASS AT CABINET DOOR
06 41 16.D03	METAL SUPPORT BRACKET (BLACK)
06 41 16.E01	DRAWER UNIT
06 41 16.G03	SOLID SURFACING MATERIAL
06 41 16.G04	SOLID SURFACING MATERIAL COUNTERTOP WITH INTEGRAL BACKSPLASH
06 41 16.K01	METAL WIRE PULL
06 41 16.K03	ALUM. STANDOFF BARREL AND CAP
08 80 00.A01	1/2" TEMPERED FIXED GLASS
08 80 00.A05	ALUMINUM HEADRAIL
09 22 16.A01	METAL STUD FRAMING
09 29 00.E01	5/8" TYPE "X" GYPSUM BOARD
09 65 13.A01	4" RUBBER BASE

GENERAL NOTES

A UNLESS SPECIFICALLY NOTED OTHERWISE - INTERIOR DIMENSIONS ARE TO FACE OF STUD, FACE OF CMU OR FACE OF CONCRETE WHERE INDICATED. WHERE FACE OF FINISH OR CLEAR DIMENSIONS ARE INDICATED FOR COORDINATION PURPOSES OR TO DESIGNATE REQUIRED CODE CLEARANCES, THE DIMENSION IS TYPICALLY DESIGNATED AS "FOF" (FACE OF FINISH) OR "CLEAR".

B CONTRACTOR RESPONSIBLE FOR FIELD MEASUREMENTS ON OVERALL DIMENSIONS.

C ROUGH-IN AND CLEARANCE DIMENSIONS, BLOCKING AND ANCHORAGE FOR SHOWER UNITS, (AS WELL AS LAUNDRY EQUIPMENT, APPLIANCES, AND SIMILAR BUILT-IN OR DIMENSIONALLY CRITICAL ITEMS) IS TO BE PROVIDED PER THE MANUFACTURER'S WRITTEN INSTALLATION INSTRUCTIONS.

D DIMENSIONS INDICATED AT SHOWER FIXTURES ARE APPROXIMATE. PRIOR TO BEGINNING PARTITION LAYOUT WORK OBTAIN ACTUAL SAMPLES OF EACH PREFABRICATED SHOWER ENCLOSURE AND CONSTRUCT MOCK-UPS OF EACH TYPICAL CONDITION TO ESTABLISH EXACT ROUGH-IN DIMENSIONS AND FRAMING, BLOCKING AND FINISH DETAILS.

E SHOWER UNITS SHALL BE GROUTED SOLID UNDERNEATH - FILL VOID BETWEEN FLOOR SLAB AND FLOOR OF SHOWER.

F DWELLING UNITS DESIGNATED AS "HC" ON THE PLANS ARE UNITS WITH MOBILITY FEATURES IN ACCORDANCE WITH APPLICABLE ACCESSIBILITY CODES. ROOMS NOTED "HC-R" ARE PROVIDED WITH ROLL-IN TYPE SHOWER ENCLOSURESS. ROOMS NOTED AS "HC-T" ARE PROVIDED WITH TRANSFER TYPE SHOWER ENCLOSURES. UNITS DESIGNATED WITH "C" ARE UNITS TO BE PROVIDED WITH COMMUNICATIONS FEATURES.

G ALL DWELLING UNITS NOT DESIGNATED AS "HC" ARE TO BE CONSTRUCTED AS "TYPE B" UNITS PER CHAPTER 11 OF ICC AND APPLICABLE PROVISIONS OF ICC/ANSI A117.1 AND THE FAIR HOUSING ACT DESIGN MANUAL.

H EXCEPT AS NOTED OTHERWISE, LAUNDRY EQUIPMENT AND RESIDENTIAL APPLIANCES ARE NOT IN CONTRACT (NIC) - LAUNDRY EQUIPMENT WILL BE FURNISHED AND INSTALLED BY THE OWNER'S SEPARATE LAUNDRY CONTRACTOR (WITH THE EXCEPTION OF STAFF APARTMENT LAUNDRY EQUIPMENT). RESIDENTIAL KITCHEN EQUIPMENT (WITH THE EXCEPTION OF WALL OVENS AND RANGE HOODS) WILL BE OWNER FURNISHED AND CONTRACTOR INSTALLED. PROVIDE ROUGH-IN FOR LAUNDRY EQUIPMENT AND RESIDENTIAL KITCHEN APPLIANCES. REFER TO ELECTRICAL DRAWINGS FOR POWER AND DATA - REFER TO PLUMBING DRAWINGS FOR GAS, WATER AND DRAINAGE - REFER TO MECHANICAL DRAWING FOR EXHAUSTING AS APPLICABLE. COORDINATE ROUGH-IN REQUIREMENTS WITH THE OWNER AND OBTAIN MANUFACTURER'S REQUIREMENTS PRIOR TO COMMENCEMENT OF ROUGH-IN WORK.

I LOCATE WHEELCHAIR ACCESSIBLE WATER CLOSETS 17" FROM CENTERLINE OF WATER CLOSET TO FACE OF FINISH AT ADJACENT WALL, TYPICAL. FLUSH HANDLES TO BE LOCATED ON THE WIDE (OPEN) SIDE OF THE FIXTURE, TYPICAL.

J PROVIDE FLOOR DRAINS (FD) AT ROLL-IN (R) AND TRANSFER (T) SHOWERS. REFER TO PLUMBING DRAWINGS, SLOPE FLOORS TO DRAIN.

K WHERE NOTED AT HANDICAP ACCESSIBLE DWELLING UNITS, PROVIDE REMOVABLE BASE CABINETS AT KITCHEN AND BATHROOM SINKS COMPLYING WITH THE REQUIREMENTS OF ADA STANDARDS FOR ACCESSIBLE DESIGN (SECTION 606.2 EXCEPTION NO. 3).

L CONTRACTOR TO PROVIDE 12 GAGE METAL BLOCKING IN STUD WALLS FOR ANCHORAGE OF WALL MOUNTED ITEMS INCLUDING BUT NOT LIMITED TO TOILET ACCESSORIES, WALL CABINETS, WALL MOUNTED TV'S, SHELVING, TOILET PARTITIONS, OWNER FURNISHED EQUIPMENT INDICATED AND SIMILAR ITEMS. FOR "TYPE B" DWELLING UNITS, PROVIDE METAL BLOCKING IN WALLS FOR FUTURE INSTALLATIONS AS INDICATED. FOR WALL MOUNTED TV'S IN LOUNGES, PROVIDE METAL BLOCKING 24" ABOVE AND BELOW ELECTRICAL JUNCTION BOXES.

M REFER TO A026 FOR DESCRIPTION OF ALL PARTITION TYPES.

N REFER TO A100 (1/8" FLOOR PLANS) SERIES DRAWINGS AND A300 SERIES DRAWINGS (ENLARGED PLANS) FOR PARTITION TYPE LOCATIONS.

O REFER TO LS SERIES DRAWING (LIFE SAFETY PLANS) FOR LOCATIONS OF FIRE RATED WALLS AND PARTITIONS.

P REFER TO A000 SERIES DRAWINGS FOR WINDOW TYPES AND DOOR TYPES, SCHEDULES AND DETAILS.

Q REFER TO A000 SERIES DRAWINGS FOR INTERIOR FINISH SCHEDULES.

R REFER TO A100 SERIES DRAWINGS (ENLARGED PLANS) FOR ADDITIONAL PLAN NOTES.

S REFER TO PROJECT MANUAL SECTION 10 28 00 FOR TOILET ACCESSORY SCHEDULE.

REGISTERED ARCHITECT — Thomas D. Saunders — 3693 — Tupelo, MS — STATE OF MISSISSIPPI
04 march 2013

THE McCARTY COMPANY
DESIGN GROUP, P.A.
MAILING ADDRESS: P.O. BOX 440 TUPELO, MS 38802
OFFICE ADDRESS: 533 WEST MAIN STREET TUPELO, MS 38804
TELEPHONE: (662) 844-4400
FAX: (662) 844-0500

DESIGN ARCHITECT
Hanbury Evans Wright Vlattas + Company
120 Atlantic Street
Norfolk, VA 23510
757.321.9600
www.hevw.com

PROJECT TITLE
USM - CENTURY PARK SOUTH
IHL# 208-297
HATTIESBURG, MISSISSIPPI

THE UNIVERSITY OF SOUTHERN MISSISSIPPI

PROJECT NO: 2012020
DRAWN BY: CH
CHECKED BY: JPH
DATE ISSUED: 04 MAR 2013

REVISIONS & ADDENDUMS

SHEET TITLE
INTERIOR DETAILS - HEALTH CLINIC/ LUCKYDAY

SHEET NUMBER
A626

Plot Date: BID DOCUMENTS - 04 MARCH 2013
3/11/2013 4:56:16 AM

MATERIAL KEYING

05 12 00.B01	TUBE COLUMN SEE STRUCTURAL
09 22 16.A01	METAL STUD FRAMING
09 22 16.B01	1 5/8" METAL STUDS
09 22 16.D10	3 5/8" METAL STUDS @ 16" O.C.
09 29 00.E01	5/8" TYPE "X" GYPSUM BOARD
09 29 00.M02	METAL CORNER BEAD (TYP)
10 26 00.A01	CORNER GUARD
10 26 00.A02	BUMPER RAIL

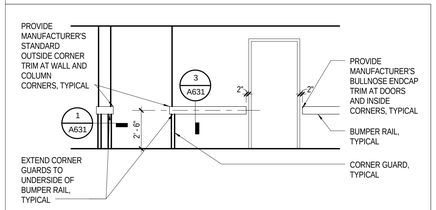

2 — 1/4" = 1'-0" — WALL AND COLUMN PROTECTION

0' 4' 8' 12'

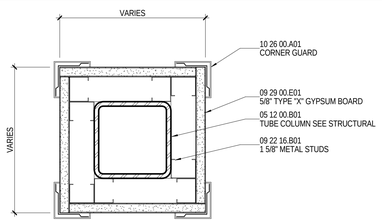

1 — 3" = 1'-0" — DETAIL - COLUMN WRAP

A101B A631

0' 4" 8" 1'

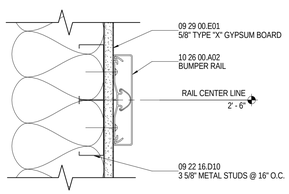

3 — 3" = 1'-0" — DETAIL - BUMPER RAIL

A631

0' 4" 8" 1'

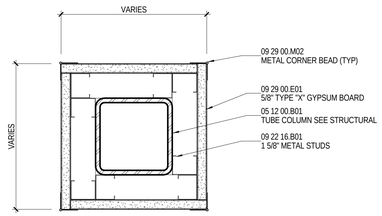

4 — 3" = 1'-0" — DETAIL - COLUMN WRAP, NO GUARD

A101B

0' 4" 8" 1'

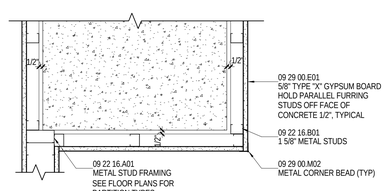

5 — 1 1/2" = 1'-0" — DETAIL - TYPICAL FRAMING AT CONCRETE COLUMN

A101A, A101B

0' 4" 8" 1'

3/4/2013 12:50:25 PM

THE McCARTY COMPANY
DESIGN GROUP, P.A.
MAILING ADDRESS:
P.O. BOX 440
TUPELO, MS 38802
OFFICE ADDRESS:
533 WEST MAIN STREET
TUPELO, MS 38804
TELEPHONE:
(662) 844-4400
FAX:
(662) 844-0500

DESIGN ARCHITECT
Hanbury Evans Wright Vlattas + Company
120 Atlantic Street
Norfolk, VA 23510
757.321.9600
www.hewv.com

PROJECT TITLE
USM - CENTURY PARK SOUTH
IHL# 208-297
HATTIESBURG, MS

THE UNIVERSITY OF SOUTHERN MISSISSIPPI

PROJECT NO:
- 2012020

DRAWN BY:
- SOM

CHECKED BY:
- JTG

DATE ISSUED:
- 04 MAR 2013

REVISIONS & ADDENDUMS

SHEET TITLE
INTERIOR DETAILS

SHEET NUMBER
A631

Plot Date: BID DOCUMENTS - 04 MARCH 2013

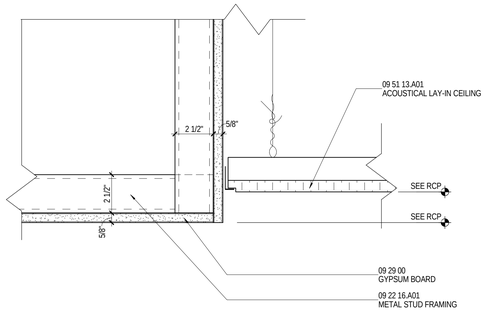

1 CEILING DETAIL
3" = 1'-0"
A401A

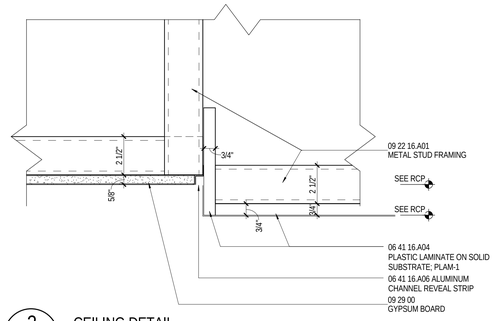

2 CEILING DETAIL
3" = 1'-0"
A403A

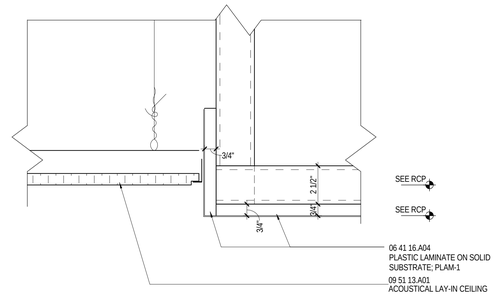

3 CEILING DETAIL
3" = 1'-0"
A402A

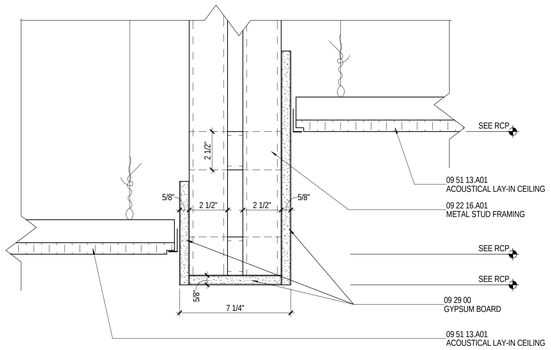

4 CEILING DETAIL
3" = 1'-0"

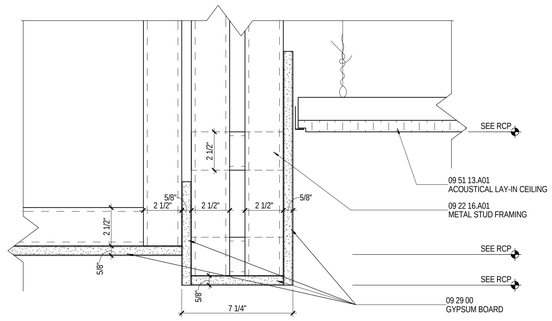

5 CEILING DETAIL
3" = 1'-0"

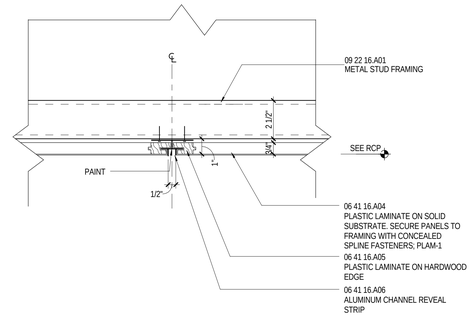

6 CEILING DETAIL
3" = 1'-0"
A401A

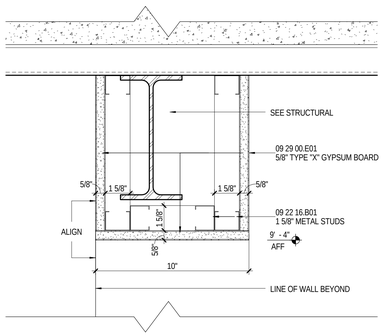

7 CEILING DETAIL
3" = 1'-0"
A402A

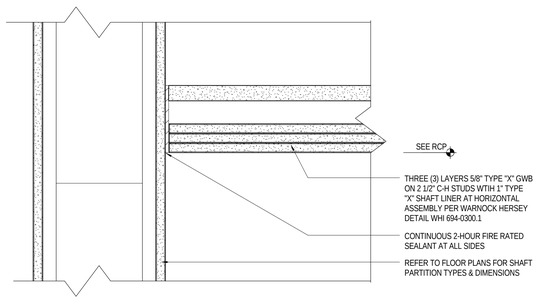

8 CEILING DETAIL
3" = 1'-0"

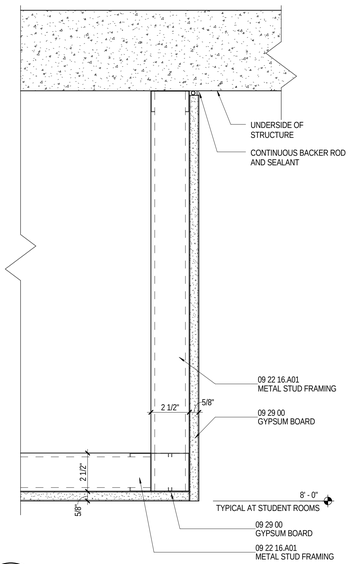

9 CEILING DETAIL
3" = 1'-0"
A401A

THE McCARTY COMPANY
DESIGN GROUP, P.A.
OFFICE ADDRESS:
533 WEST MAIN STREET
TUPELO, MS 38804
TELEPHONE:
(662) 844-4400
FAX:
(662) 844-0503
MAILING ADDRESS:
P.O. BOX 440
TUPELO, MS 38802

DESIGN ARCHITECT
Hanbury Evans Wright Vlattas + Company
120 Atlantic Street
Norfolk, VA 23510
757.321.9600
www.hewv.com

PROJECT TITLE
USM - CENTURY PARK SOUTH
IHL# 208-297
HATTIESBURG, MISSISSIPPI

THE UNIVERSITY OF
SOUTHERN
MISSISSIPPI

PROJECT NO:
- 2012020

DRAWN BY:
- Author

CHECKED BY:
- JTG

DATE ISSUED:
- 04 MAR 2013

REVISIONS & ADDENDUMS

SHEET TITLE
CEILING
DETAILS

SHEET NUMBER
A641

3/8/2013 12:28:19 PM

Plot Date: BID DOCUMENTS - 04 MARCH 2013